SA1AH–01

REPLACEMENT

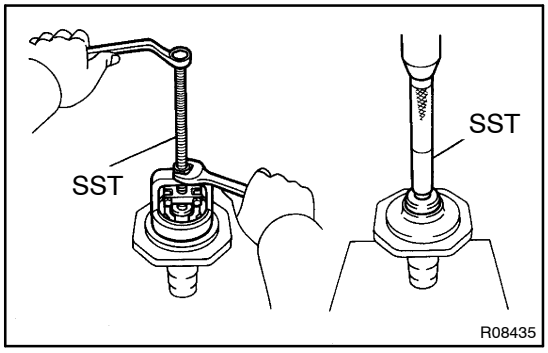

1. REPLACE BUSHING

(a) Using SST, remove the bushing.
SST 09612–65014 (09612–01010, 09612–01050)

(b) Using SST and a press, install a new bushing into the spindle.
SST 09618–60010

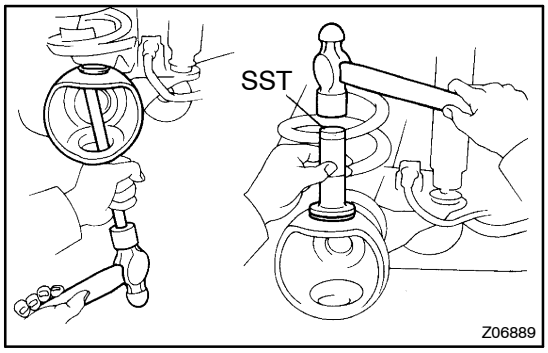

2. REPLACE BEARING OUTER RACE

(a) Using a brass bar and hammer, remove the bearing outer race.

(b) Using SST and a hammer, carefully install a new bearing outer race.
SST 09605–60010