SA1AJ–02

INSTALLATION

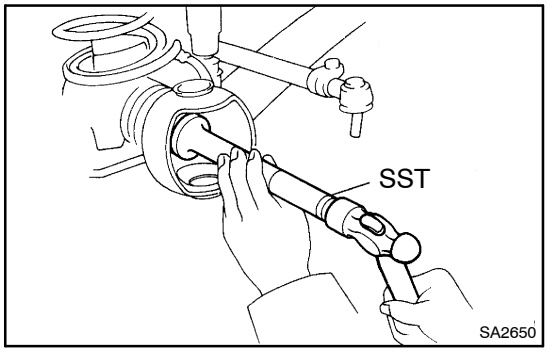

1. INSTALL OIL SEAL TO AXLE HOUSING

Using SST and a hammer, install a new oil seal into the axle housing.

SST 09618–60010

2. TEMPORALLY INSTALL NEW OIL SEAL SET TO AXLE HOUSING

Place the felt dust seal, rubber seal and steel ring to the axle housing.

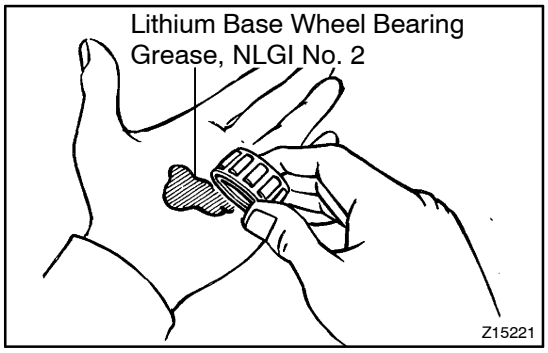

3. PACK BEARINGS WITH LITHIUM BASE WHEEL BEARING GREASE, NLGI NO. 2

(a) Place lithium base wheel bearing grease, NLGI No. 2 on your hand.

(b) Pack grease into the bearing until the grease oozes out from the outer side.

(c) Do the same around the bearing circumference.

4. INSTALL STEERING KNUCKLE AND BEARINGS

(a) Place the bearings in positions on the knuckle and axle housing.

(b) Install the knuckle on the axle housing.

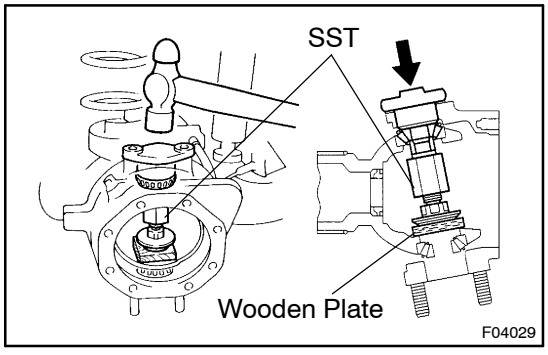

5. INSTALL KNUCKLE ARM AND BEARING CAP

(a) Using SST and wooden plate, support the upper bearing inner race.

SST 09606–60020

HINT:

Use the SST with a collar.

(b) Install the bearing cap over the used shim.

(c) Using a hammer, install the bearing cap into the bearing inner race.

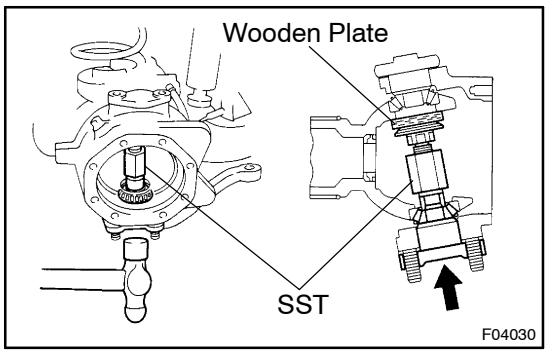

(d) Using SST and wooden plate, support the lower bearing inner race.

SST 09606–60020

HINT:

Use the SST with a collar.

(e) Using a hammer, tap the knuckle arm and shim into bearing inner race.

(f) Remove the SST from the knuckle.

(g) Install the 4 cone washers and nuts.
Torque: 96 N·m (980 kgf·cm, 71 ft·lbf)
(h) Install the 2 bolts on the bearing cap.
Torque: 96 N·m (980 kgf·cm, 71 ft·lbf)

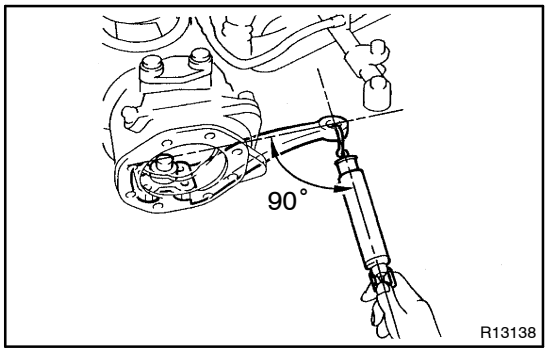

6. MEASURE BEARINGS PRELOAD

Using a spring tension gauge, measure the preload.
Preload (at starting):
25 – 44 N (2.5 – 4.5 kgf, 5.6 – 9.9 lbf)

7. ADJUST BEARING PRELOAD

(a) Remove the bearing cap and knuckle arm.
(b) Select the adjusting shim.

Adjusting shim thickness

Thickness mm (in.)	Thickness mm (in.)
0.1 (0.004)	0.5 (0.020)
0.2 (0.008)	1.0 (0.039)

(c) Install the bearing cap and knuckle arm.

8. CONNECT TIE ROD TO KNUCKLE ARM

Torque the nut and secure it with a new cotter pin.
Torque: 91 N·m (925 kgf·cm, 67 ft·lbf)
If the holes for the cotter pin are not aligned, tighten the nut further up to 60°.

9. INSTALL OIL SEAL END RETAINER TO KNUCKLE ARM

Install the steel ring, rubber seal, felt dust seal and oil seal end retainer to steering knuckle with the 6 bolts.
Torque: 5.4 N·m (55 kgf·cm, 48 in.·lbf)

10. INSTALL AXLE SHAFT

Position one flat part of the outer shaft upward and install the shaft.

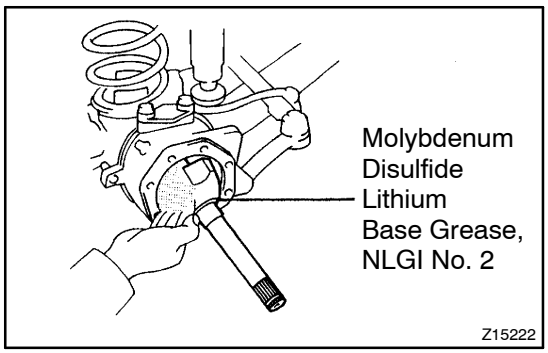

11. PACK MOLYBDENUM DISULFIDE LITHIUM BASE GREASE, NLGI NO. 2

Pack molybdenum disulfide lithium base grease, NLGI No. 2 into the knuckle to about 3 fourths of the knuckle.

12. INSTALL KNUCKLE SPINDLE, DUST COVER WITH GASKETS AND DUST SEAL

(a) Place a new gasket in position on the knuckle and install the spindle.

(b) Place the dust cover, dust seal and a new gasket on the spindle.

(c) Torque the 8 bolts.

Torque: 47 N·m (475 kgf·cm, 34 ft·lbf)

13. INSTALL FRONT AXLE HUB (See page SA–9)

14. CHECK FRONT WHEEL ALIGNMENT (See page SA–2)