SA1AR–01

# REPLACEMENT

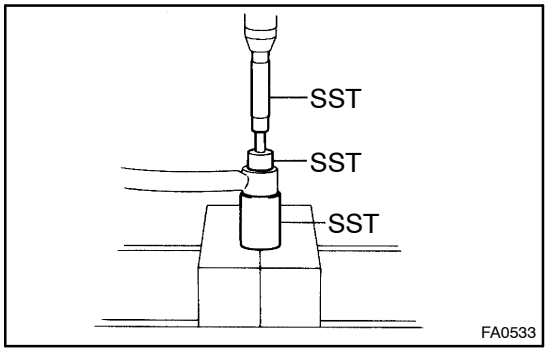


## 1. REMOVE BUSHING

Using SST and a press, remove the bushing from the lateral control rod.

SST 09710–22042 (09710–02051, 09710–02071), 09950–70010 (09951–07150)

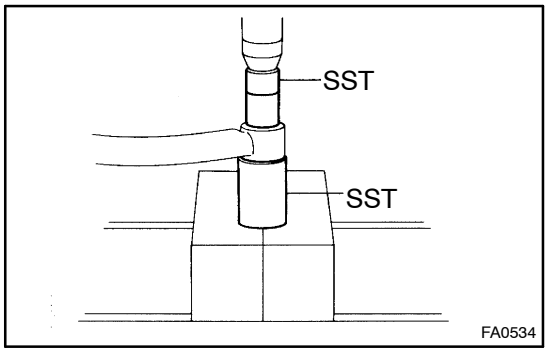


## 2. INSTALL BUSHING

Using SST and a press, install a new bushing into the lateral control rod.

SST 09710–22042 (09710–02051, 09710–02071)

HINT:

Do not use a lubricant when pressing in the bushing.