REAR DIFFERENTIAL CARRIER

COMPONENTS

SA1QH–01

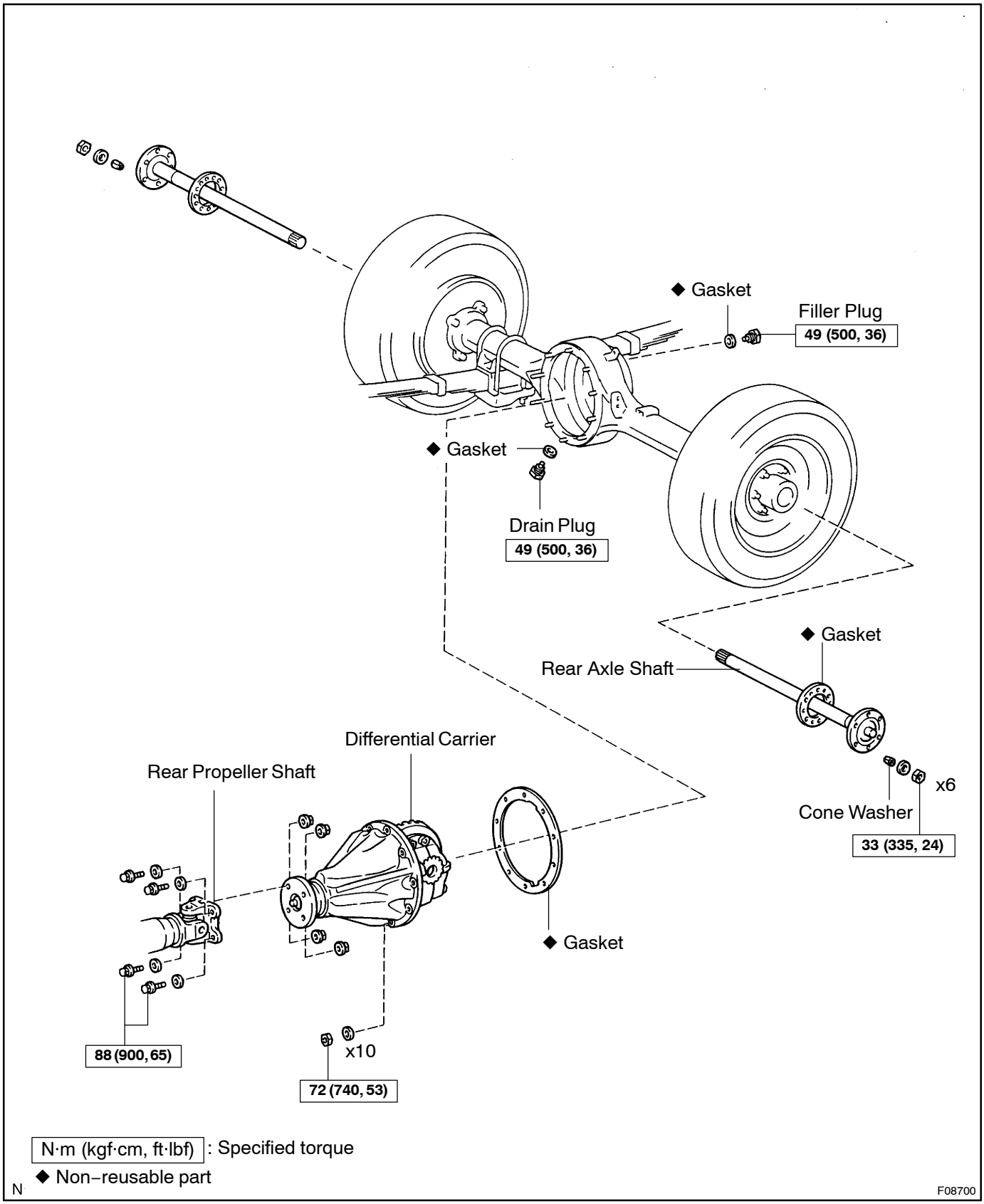

N·m (kgf·cm, ft·lbf) : Specified torque

◆ Non–reusable part

N

F08700

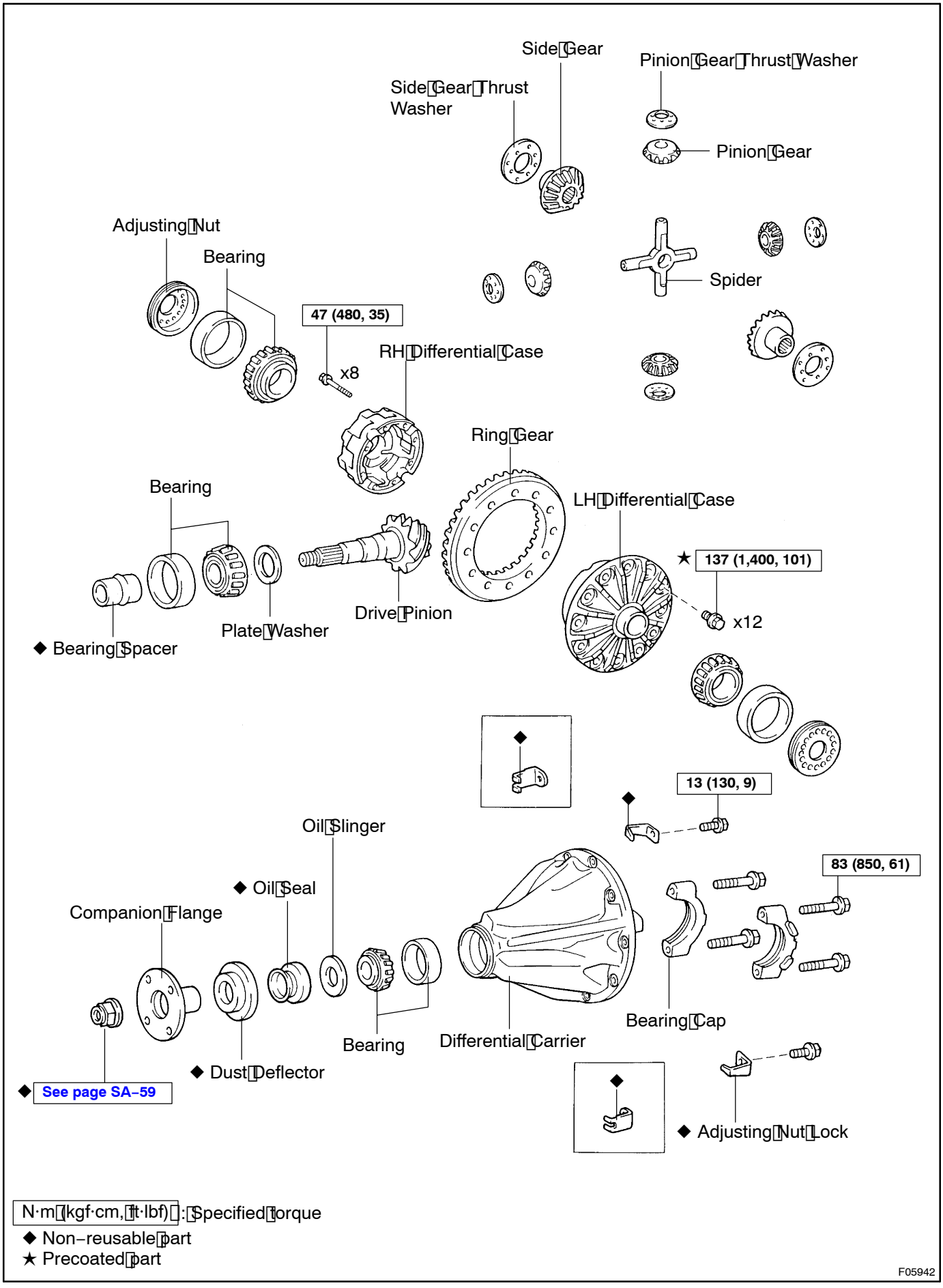

N·m (kgf·cm, ft·lbf) : Specified torque
◆ Non–reusable part
★ Precoated part

F05942