SA15Q–11

REASSEMBLY

HINT:

- Using a shop rag, clean off any foreign object from the parts.
- Apply all of the sliding and rotating surfaces with hypoid gear oil.

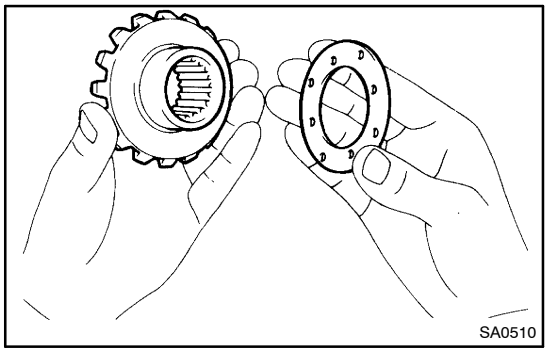

1. MEASURE SIDE GEAR BACKLASH

(a) Install the 2 thrust washers to the side gears.
(b) Install the side gear assembly to the differential case.
(c) Install the 4 pinion gears and thrust washers to the spider.
(d) Install the spider assembly to the differential case.

HINT:

Install the spider to the differential case tightly.

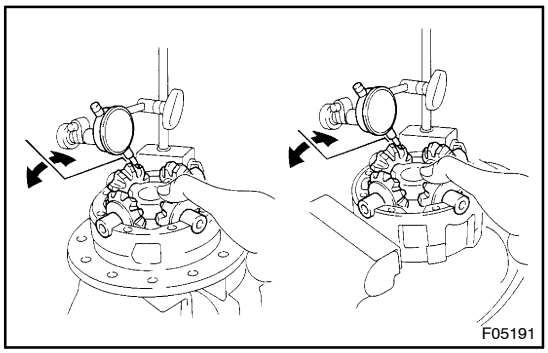

(e) Using a dial indicator, measure the side gear backlash holding the side gear and spider.

Backlash: 0.02 – 0.15 mm (0.0008 – 0.0059 in.)

HINT:

- Measure at all 4 locations.
- Measure the backlash at the LH and RH differential cases.

If the backlash is not within the specification, install a thrust washer of a different thickness.

Thrust washer thickness

Thickness mm (in.)	Thickness mm (in.)
1.55 (0.0610)	1.85 (0.0728)
1.60 (0.0630)	1.90 (0.0748)
1.65 (0.0650)	1.95 (0.0768)
1.70 (0.0669)	2.00 (0.0787)
1.75 (0.0689)	2.05 (0.0807)
1.80 (0.0709)	2.10 (0.0827)

2. ASSEMBLE DIFFERENTIAL CASE

(a) Reinstall the spider assembly to the differential case.

HINT:

Install the spider to the differential case tightly.

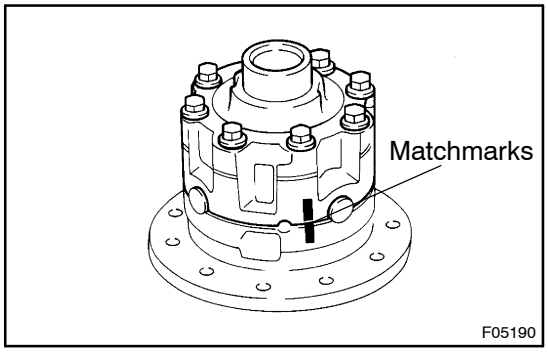

(b) Align the matchmarks and assemble the LH and RH differential cases.
(c) Tighten the 8 bolts uniformly, a little at a time.
Torque: 47 N·m (480 kgf·cm, 35 ft·lbf)

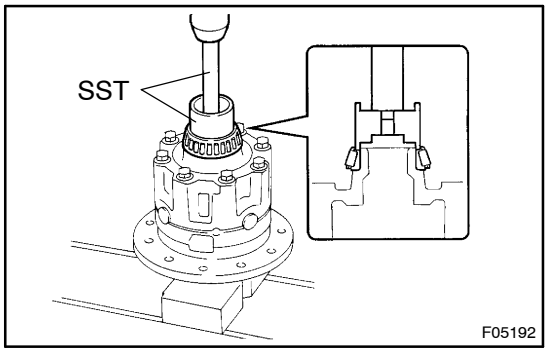

3. INSTALL SIDE BEARING
(a) Using SST and a press, install the RH side bearing on the differential case.
SST 09710–30050, 09950–70010 (09951–07150)

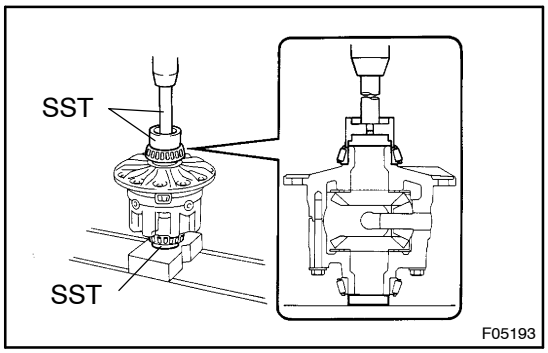

(b) Using SST and a press, install the LH side bearing on the differential case.
SST 09710–30050, 09950–60010 (09951–00480), 09950–70010 (09951–07150)

4. INSTALL RING GEAR ON DIFFERENTIAL CASE
(a) Clean the threads of the bolts and differential case with the white gasoline.
(b) Clean the contact surfaces of the differential case and ring gear.

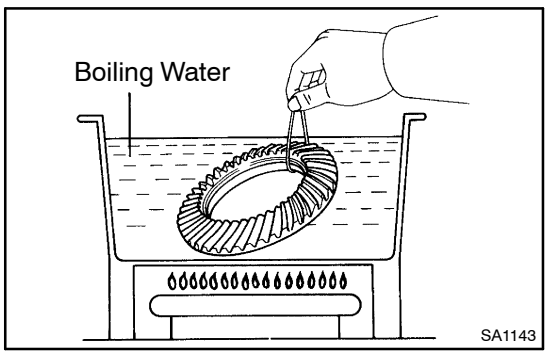

(c) Heat the ring gear to about 100 °C (212 °F) in boiling water.
(d) Carefully take the ring gear out of the boiling water.
(e) After the moisture on the ring gear has completely evaporated, quickly install the ring gear to the differential case.

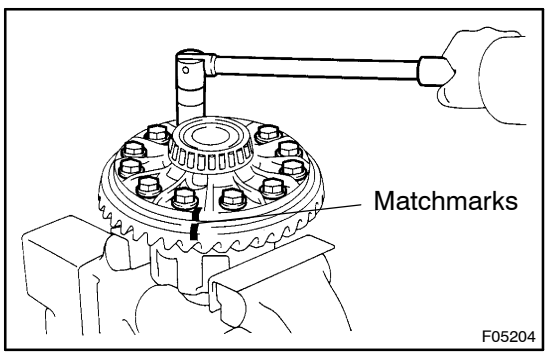

(f) Align the matchmarks on the ring gear and differential case.
(g) Temporarily install the 12 set bolts.
(h) After the ring gear cools down enough, torque the 12 set bolts to which thread lock has been applied.
Thread lock: Part No. 08833–00100, THREE BOND 1360 K or equivalent
Torque: 137 N·m (1,400 kgf·cm, 101 ft·lbf)

5. CHECK RING GEAR RUNOUT

(a) Place the bearing outer races on their respective bearings. Check that the left and right outer races are not interchanged.

(b) Install the differential case onto the carrier and tighten the adjusting nut just to where there is no play in the bearings.

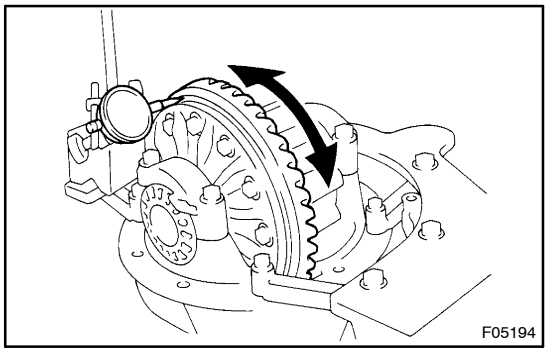

(c) Using a dial indicator, check the ring gear runout.
Maximum runout: 0.05 mm (0.0020 in.)

(d) Remove the differential case.

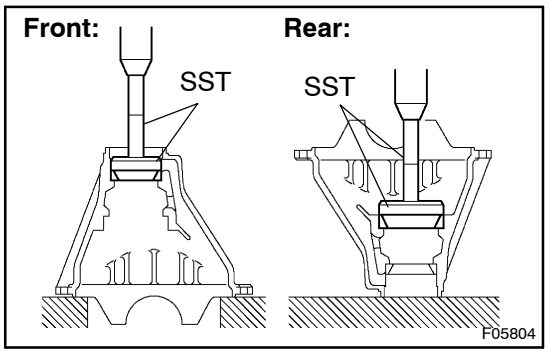

6. INSTALL FRONT AND REAR BEARING OUTER RACES

(a) Using SST and a press, install the front bearing outer race.
SST 09950–60020 (09951–00710),
09950–70010 (09951–07150)

(b) Using SST and a press, install the rear bearing outer race.
SST 09950–60020 (09951–00890),
09950–70010 (09951–07150)

7. INSTALL DRIVE PINION REAR BEARING

(a) Install the washer on the drive pinion.

HINT:
First fit a washer with the same thickness as the washer which was removed, then after checking the tooth contact pattern, replace the washer with one of a different thickness if necessary.

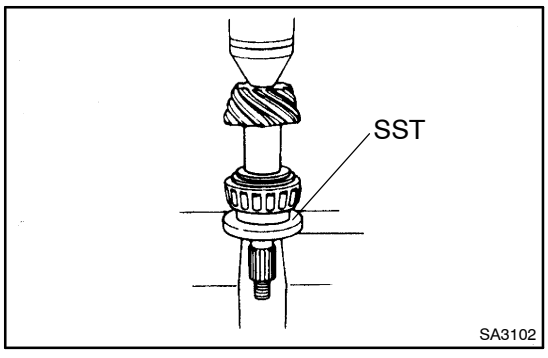

(b) Using SST and a press, install the rear bearing onto the drive pinion.
SST 09506–35010

8. TEMPORARILY ADJUST DRIVE PINION PRELOAD

(a) Install the drive pinion and front bearing.

HINT:
Assemble the spacer and oil seal after adjusting the gear contact pattern.

(b) Install the oil slinger.

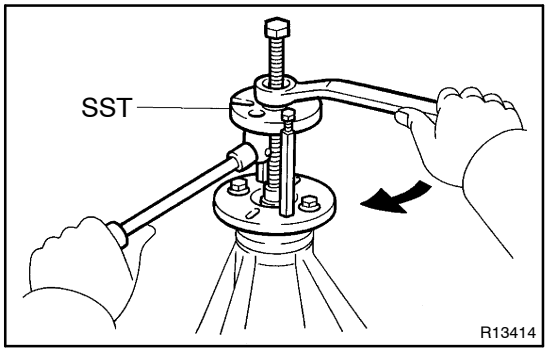

(c) Using SST, install the companion flange.
SST 09950–30011 (09951–03010, 09953–03010, 09954–03010, 09955–03030, 09956–03040)

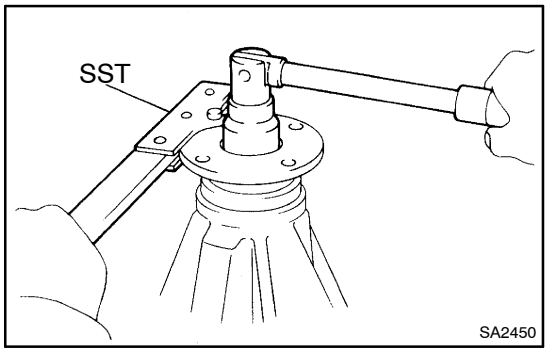

(d) Using SST to hold the flange and adjust the drive pinion preload by tightening the nut.
SST 09330–00021

NOTICE:

- **Coat the nut and threads of the drive pinion with gear oil.**
- **As there is no spacer, tighten the nut a little at a time, being careful not to overtighten.**

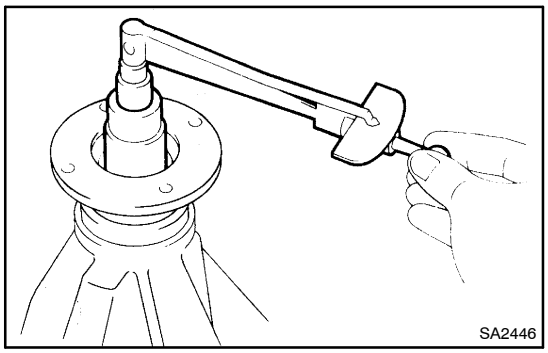

(e) Using a torque wrench, measure the preload.
Preload (at starting):
New bearing
1.3 – 1.8 N·m (13 – 19 kgf·cm, 11.3 – 16.4 in.·lbf)
Reused bearing
0.64 – 0.92 N·m (6.5 – 9.4 kgf·cm, 5.6 – 8.2 in.·lbf)

HINT:
Measure the total preload after turning the bearing clockwise and counterclockwise several times to make the bearing smooth.

9. INSTALL DIFFERENTIAL CASE IN CARRIER

(a) Place the 2 bearing outer races on their respective bearings. Make sure that the left and right outer races are not interchanged.

(b) Install the differential case in the carrier.

HINT:
Make sure that there is backlash between the ring gear and drive pinion.

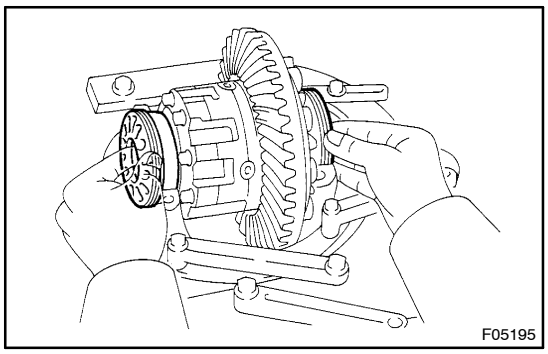

10. INSTALL ADJUSTING NUTS

Install the 2 adjusting nuts on the carrier, making sure the nuts are engaged properly.

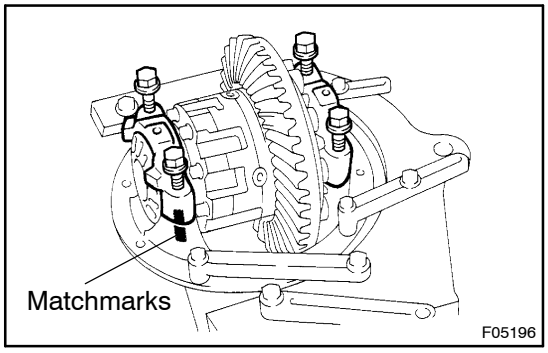

11. INSTALL BEARING CAPS

Align the matchmarks on the bearing cap and carrier. Screw in the 2 bearing cap bolts 2 or 3 turns and press down the bearing cap by hand.

HINT:

If the bearing cap does not fit tightly on the carrier, the adjust nuts are not engaged properly.

Reinstall the adjusting nuts if necessary.

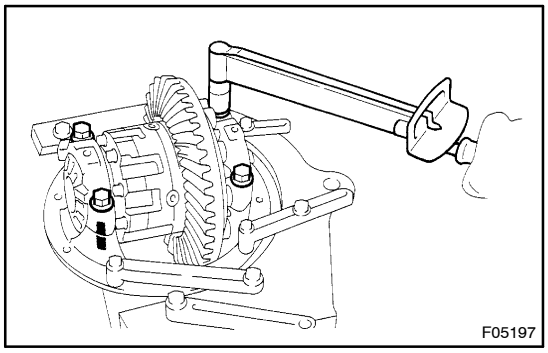

12. ADJUST SIDE BEARING PRELOAD

(a) Torque the 4 bolts.
Torque: 83 N·m (850 kgf·cm, 61 ft·lbf)

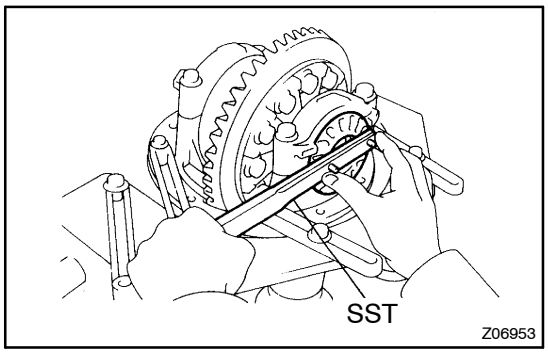

(b) Then loosen them to the point where the adjusting nuts can be turned by SST.
SST 09504–00011

(c) Tighten the 4 bolts.
Torque: 9.8 N·m (100 kgf·cm, 7 ft·lbf)

(d) Using SST, torque the adjusting nut on the ring gear side until the ring gear has a backlash of about 0.2 mm (0.008 in.).

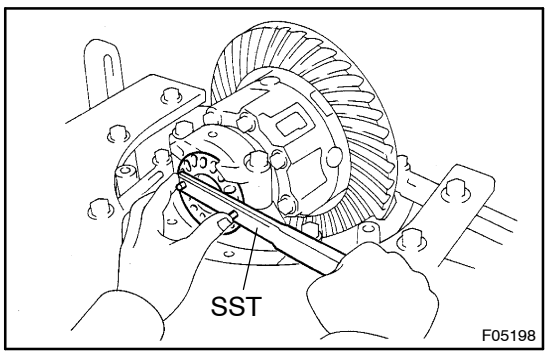

(e) While turning the ring gear, use the SST to fully tighten the adjusting nut on the drive pinion side. After the bearings are settled, loosen the adjusting nut on the drive pinion side.

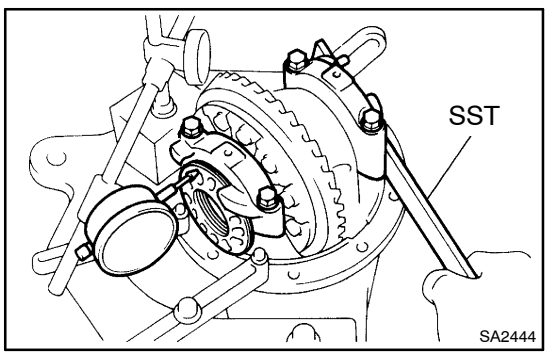

(f) Place a dial indicator on the top of the adjusting nut on the ring gear side.

(g) Adjust the side bearing to zero preload by tightening the other adjusting nut until the pointer on the indicator begins to move.

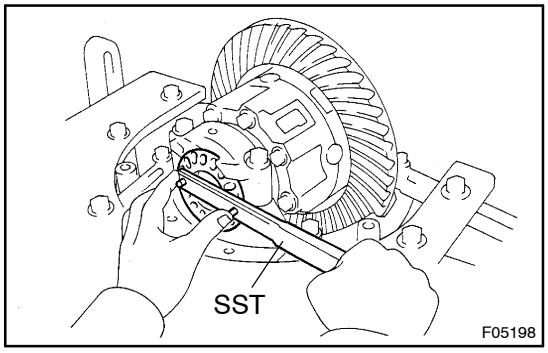

(h) Using SST, torque the adjusting nut 1 – 1.5 notches from the zero preload position.

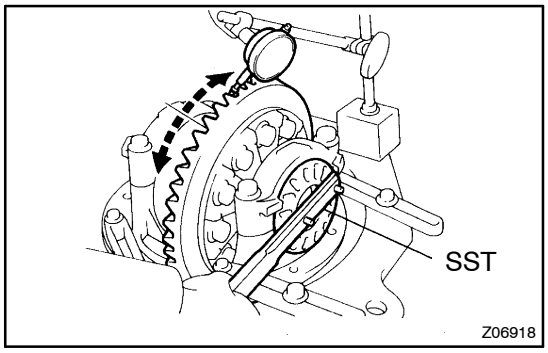

(i) Using a dial indicator, adjust the ring gear backlash until it is within the specification.
Backlash: 0.13 – 0.18 mm (0.0051 – 0.0071 in.)

HINT:
The backlash is adjusted by turning the left and right adjusting nuts by equal amount. For example, loosen the nut on the left side 1 notch and torque the nut on the right side 1 notch.

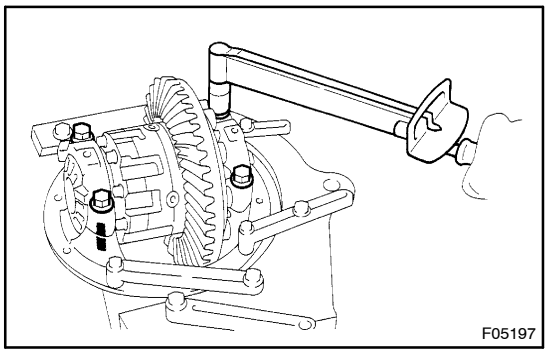

(j) Torque the 4 bearing cap bolts.
Torque: 83 N·m (850 kgf·cm, 61 ft·lbf)

(k) After rotating the ring gear 5 turns or more, recheck the ring gear backlash.
Backlash: 0.13 – 0.18 mm (0.0051 – 0.0071 in.)

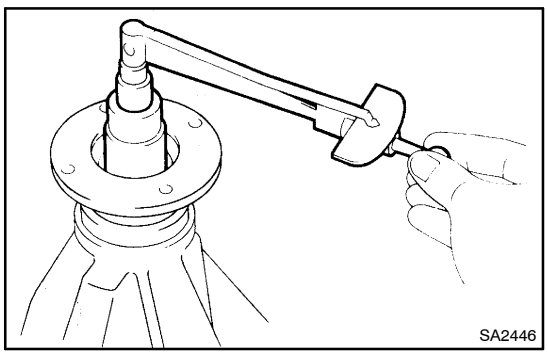

13. MEASURE TOTAL PRELOAD

Using a torque wrench, measure the preload with the teeth of the drive pinion and ring gear in contact.

Preload (at starting):
Drive pinion preload plus
0.38 – 0.63 N·m (3.8 – 6.4 kgf·cm, 3.3 – 5.6 in.·lbf)

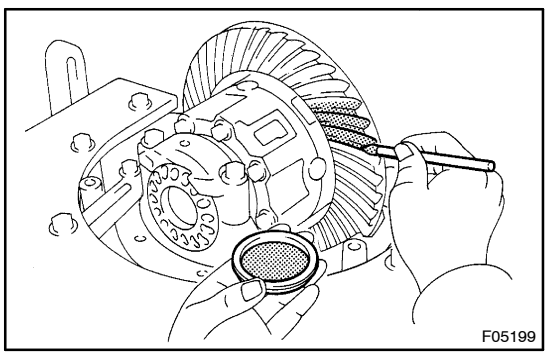

14. INSPECT TOOTH CONTACT BETWEEN RING GEAR AND DRIVE PINION

(a) Coat 3 or 4 teeth at 3 different positions on the ring gear with red lead primer.

(b) Turn the companion flange, in both directions to inspect the ring gear for proper tooth contact.

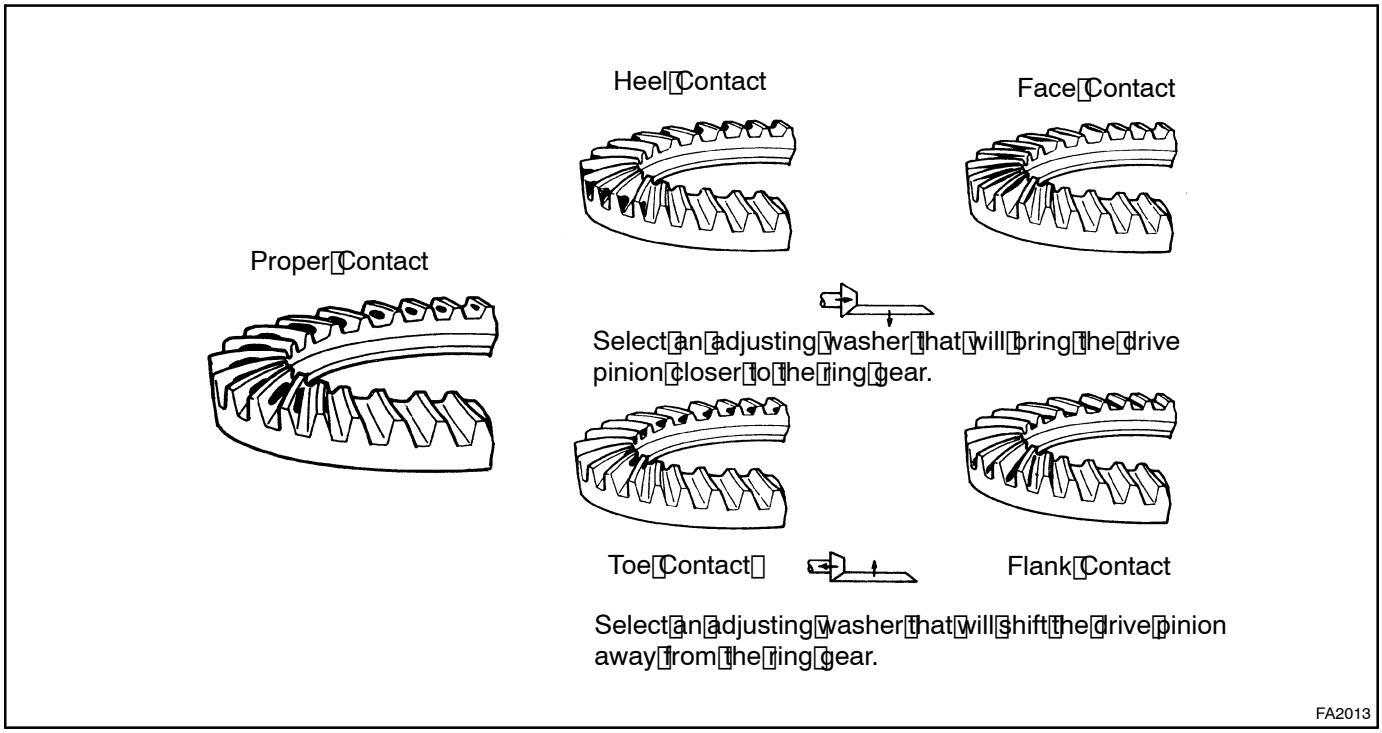

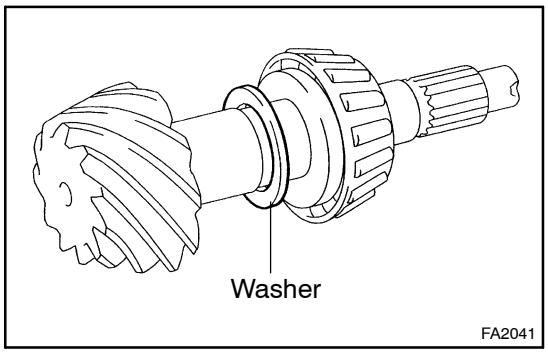

If the teeth are not contacting properly, use the following chart to select a proper washer for correction.

Thickness mm (in.)	Thickness mm (in.)
1.050 (0.04134)	1.325 (0.05217)
1.075 (0.04232)	1.350 (0.05315)
1.100 (0.04331)	1.375 (0.05413)
1.125 (0.04429)	1.400 (0.05512)
1.150 (0.04528)	1.425 (0.05610)
1.175 (0.04626)	1.450 (0.05709)
1.200 (0.04724)	1.475 (0.05807)
1.225 (0.04823)	1.500 (0.05906)
1.250 (0.04921)	1.525 (0.06004)
1.275 (0.05020)	1.550 (0.06102)
1.300 (0.05118)	–

15. REMOVE COMPANION FLANGE (See page SA–54)

16. REMOVE OIL SLINGER AND FRONT BEARING (See page SA–54)

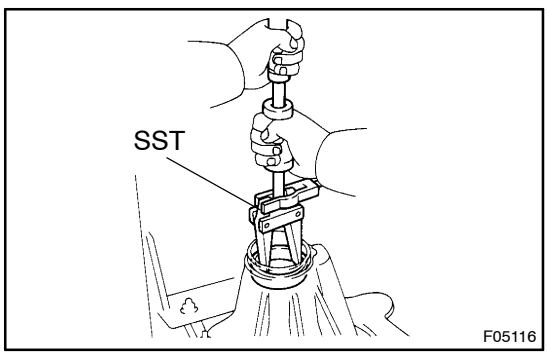

17. REMOVE BEARING OUTER RACE

Using SST, remove the bearing outer race.

SST 09308–00010

18. INSTALL NEW BEARING SPACER

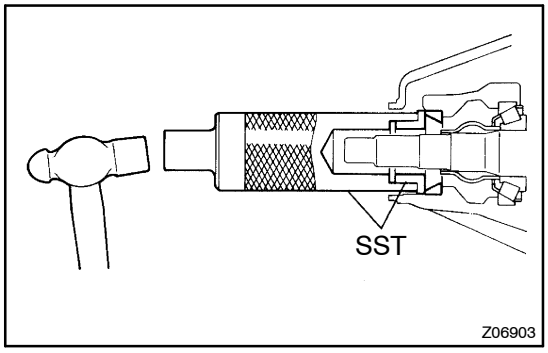

19. INSTALL BEARING OUTER RACE

Using SST and a hammer, install the bearing outer race.

SST 09316–60011 (09316–00011, 09316–00021)

20. INSTALL FRONT BEARING AND OIL SLINGER

21. INSTALL OIL SEAL

(a) Coat the hypoid gear oil to a new oil seal periphery.

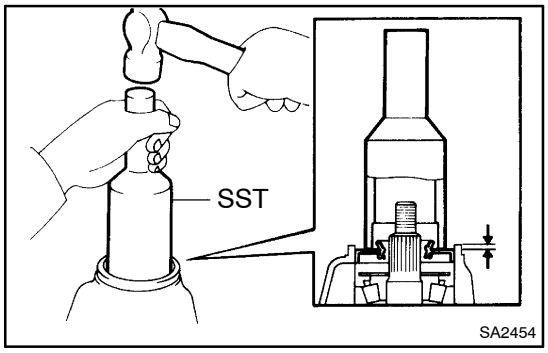

(b) Using SST and a hammer, install a new oil seal.

SST 09214–76011

Oil seal drive in depth: 0.5 mm (0.020 in.)

(c) Coat the MP grease to the oil seal lip.

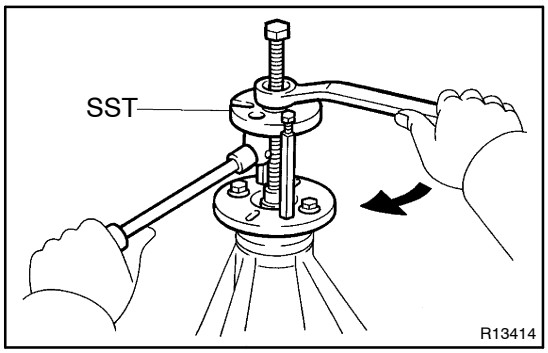

22. INSTALL COMPANION FLANGE

(a) Using SST, install the companion flange.

SST 09950–30011 (09951–03010, 09953–03010, 09954–03010, 09955–03030, 09956–03040)

(b) Coat the threads of a new nut with hypoid gear oil.

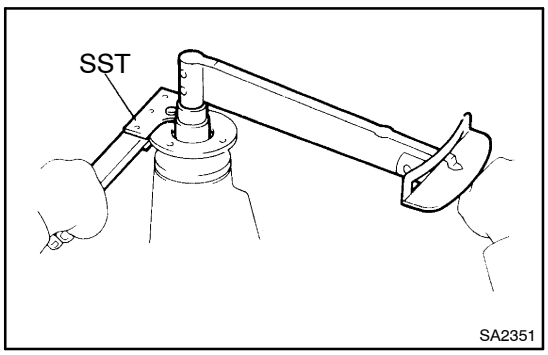

(c) Using SST to hold the flange, tighten the nut.

SST 09330–00021

Torque: 245 N·m (2,500 kgf·cm, 181 ft·lbf)

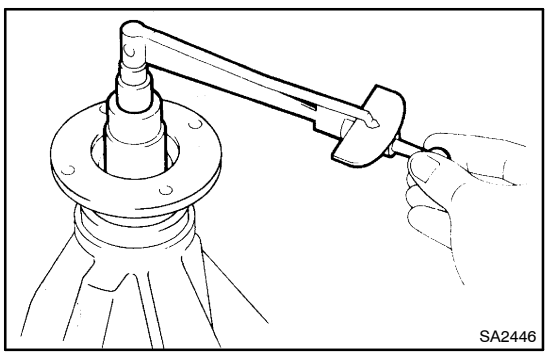

23. ADJUST DRIVE PINION PRELOAD

Using a torque wrench, measure the preload of the backlash between the drive pinion and ring gear.

Preload (at starting):

New bearing

1.3 – 1.8 N·m (13 – 19 kgf·cm, 11.3 – 16.4 in.·lbf)

Reused bearing

0.64 – 0.92 N·m (6.5 – 9.4 kgf·cm, 5.6 – 8.2 in.·lbf)

If the preload is greater than the specification, replace the bearing spacer.

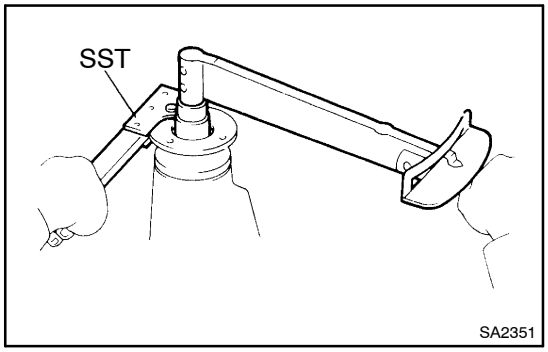

If the preload is less than the specification, retighten the nut with a force of 13 N·m (130 kgf·cm, 9 ft·lbf) at a time until the specified preload is reached.

SST 09330–00021

Torque: 441 N·m (4,500 kgf·cm, 326 ft·lbf) or less

If the maximum torque is exceeded while retightening the nut, replace the bearing spacer and repeat the preload procedure. Do not loosen the pinion nut to reduce the preload.

24. RECHECK RING GEAR BACKLASH
(See step 12.)

25. RECHECK TOOTH CONTACT BETWEEN RING GEAR AND DRIVE PINION (See step 14.)

26. CHECK RUNOUT OF COMPANION FLANGE
(See page SA–54)

27. STAKE DRIVE PINION NUT

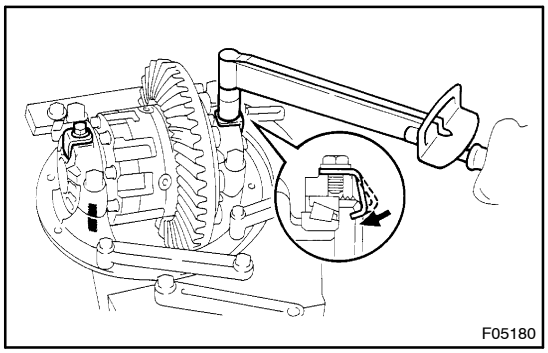

28. INSTALL ADJUSTING NUT LOCKS

(a) Install 2 new nut locks on the bearing caps.

(b) Tightening 2 bolts, bend the nut locks.

Torque: 13 N·m (130 kgf·cm, 9 ft·lbf)

29. REMOVE DIFFERENTIAL CARRIER FROM MOVER-HAUL STAND, ETC.