# REAR DIFFERENTIAL CARRIER (w/ Diff. Lock)

## COMPONENTS

SA1QJ–01

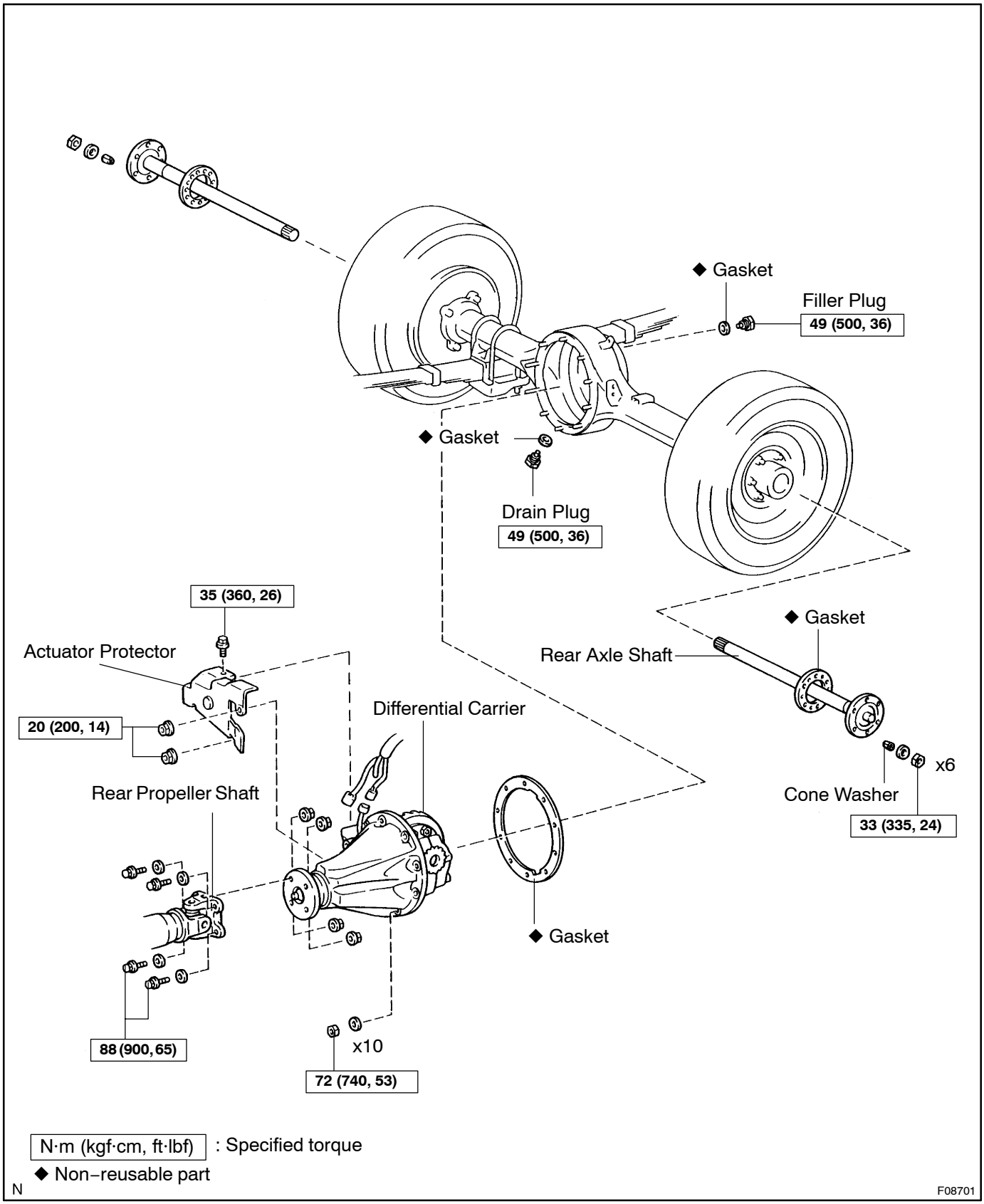

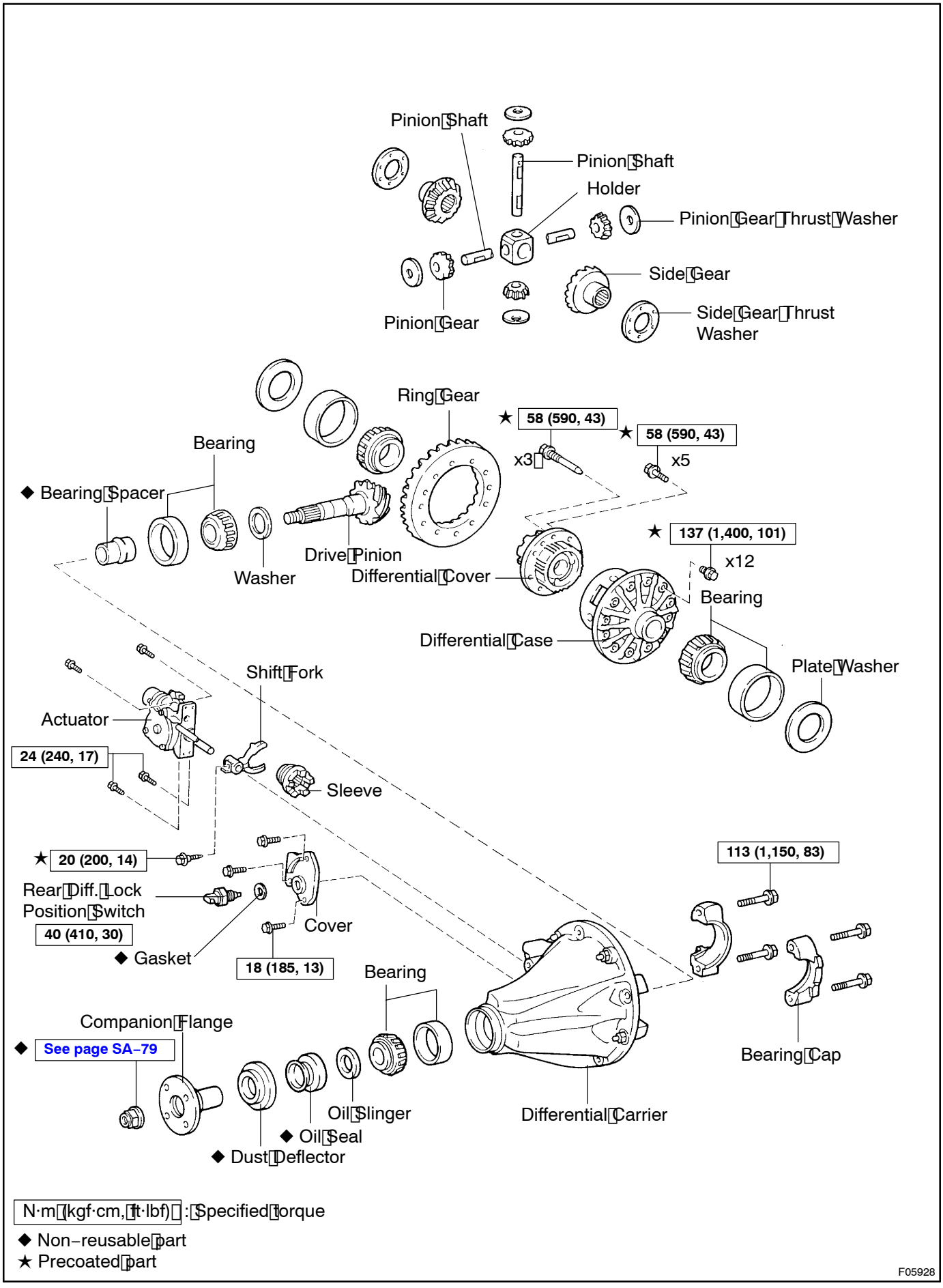
Pinion Shaft
Pinion Shaft
Holder
Pinion Gear Thrust Washer
Side Gear
Side Gear Thrust Washer
Pinion Gear
Ring Gear
★ 58 (590, 43)
x3
★ 58 (590, 43)
x5
Bearing
◆ Bearing Spacer
Drive Pinion
Washer
Differential Cover
★ 137 (1,400, 101)
x12
Bearing
Differential Case
Plate Washer
Shift Fork
Actuator
24 (240, 17)
Sleeve
★ 20 (200, 14)
Rear Diff. Lock Position Switch
40 (410, 30)
Cover
◆ Gasket
18 (185, 13)
113 (1,150, 83)
Bearing
Companion Flange
◆ See page SA–79
Oil Slinger
◆ Oil Seal
◆ Dust Deflector
Differential Carrier
Bearing Cap
N·m (kgf·cm, ft·lbf) : Specified torque
◆ Non–reusable part
★ Precoated part
F05928