SA15V–05

REPLACEMENT

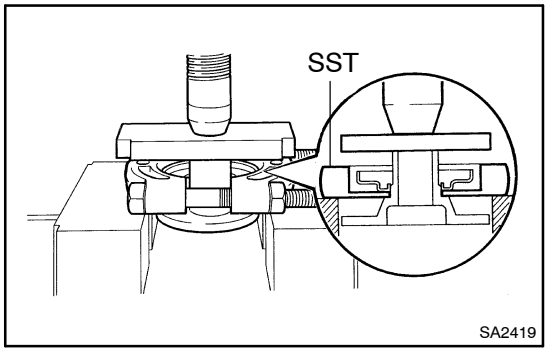

1. REMOVE COMPANION FLANGE DUST DEFLECTOR

Using SST, a steel plate and press, remove the dust deflector.

SST 09950–00020

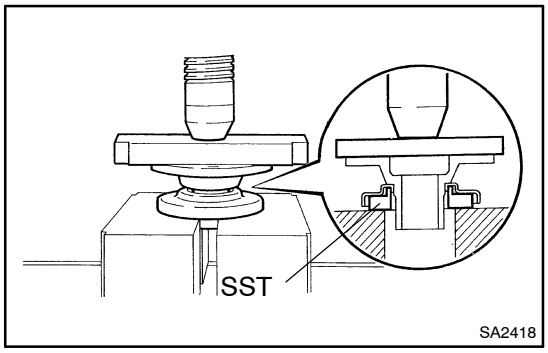

2. INSTALL DUST DEFLECTOR

Using SST, a steel plate and press, install a new dust deflector.

SST 09726–40010