REAR DIFFERENTIAL CARRIER (w/ LSD)

COMPONENTS

SA1QL–01

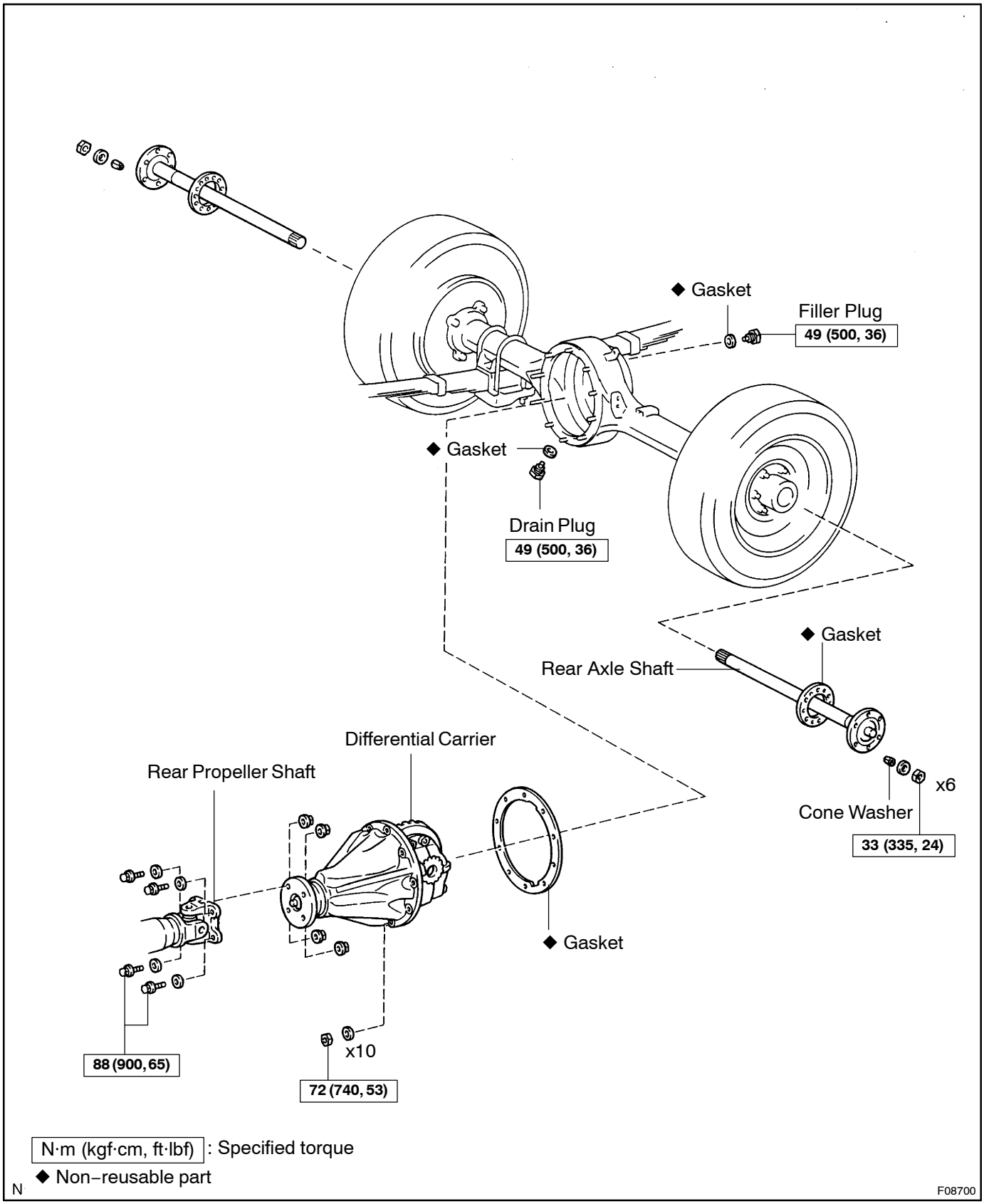

N·m (kgf·cm, ft·lbf) : Specified torque

◆ Non–reusable part

N

F08700

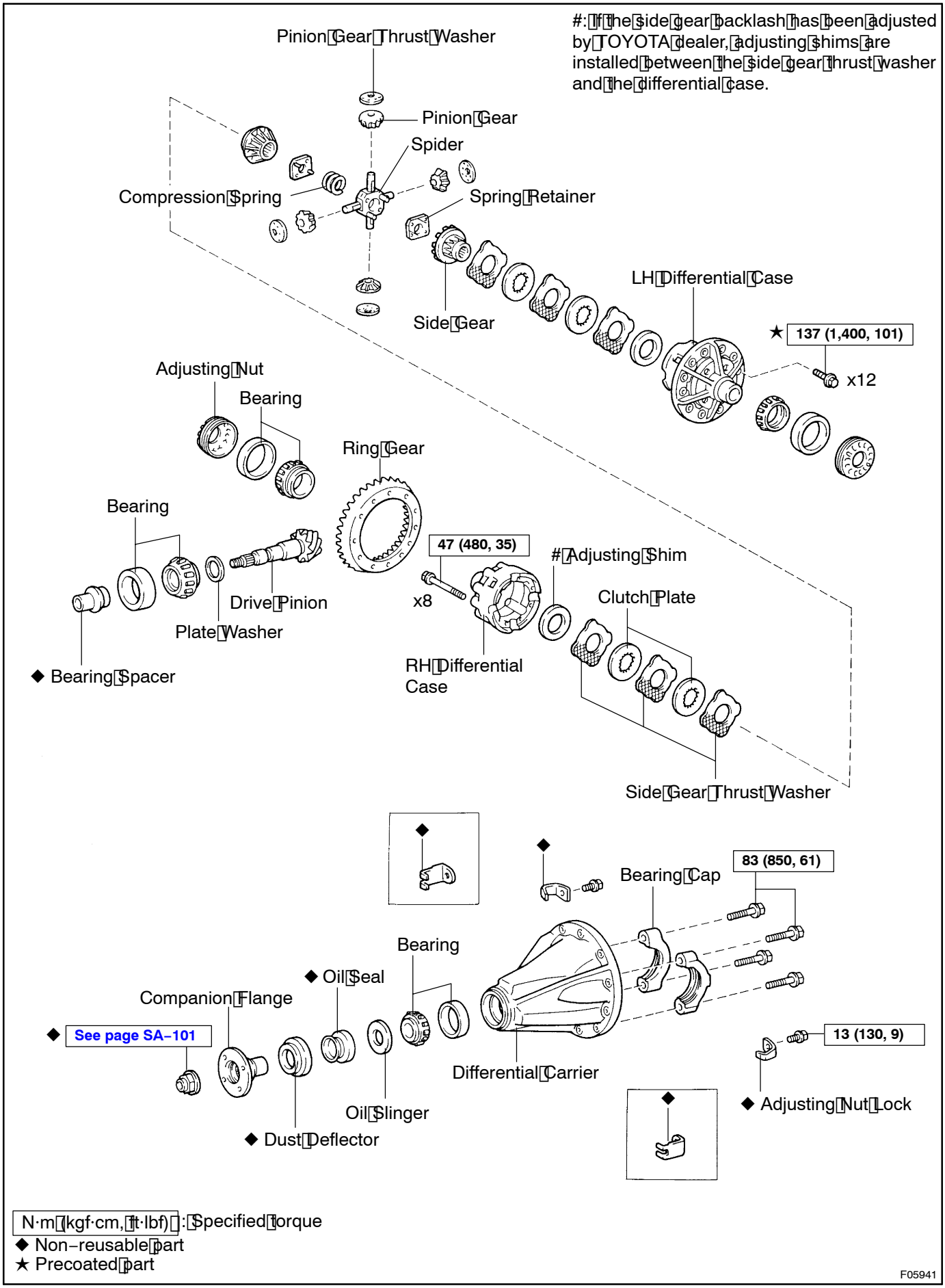

N·m (kgf·cm, ft·lbf): Specified torque
◆ Non–reusable part
★ Precoated part

F05941