SA1SO–01

REMOVAL

1. SUPPORT BODY

(a) Jack up and support the body on the stands.

(b) Lower the axle housing until the leaf spring tension is free, and keep it at this position.

2. REMOVE REAR WHEEL

Torque:
Steel wheels: 209 N·m (2,131 kgf·cm, 154 ft·lbf)
Aluminum wheels: 131 N·m (1,336 kgf·cm, 97 ft·lbf)

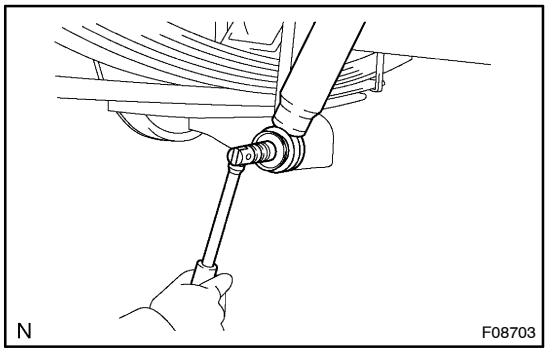

3. DISCONNECT REAR SHOCK ABSORBER

(a) Remove the bolt and disconnect the lower side of shock absorber from the spring seat.
Torque: 64 N·m (650 kgf·cm, 47 ft·lbf)

(b) Remove the cushion and retainer.

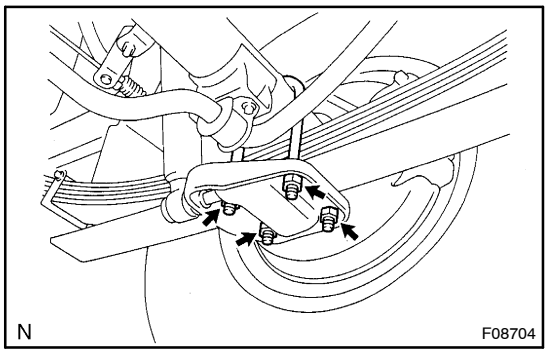

4. REMOVE U–BOLTS

(a) Remove the 4 U–bolt mounting nuts and washer.
Torque: 142 N·m (1,450 kgf·cm, 105 ft·lbf)

(b) Remove the spring seat, distance plate.

(c) Remove the 2 U–bolts.

HINT:
At the time of installation, tighten the U–bolts so that the length of all the U–bolts under the spring seat is the same.

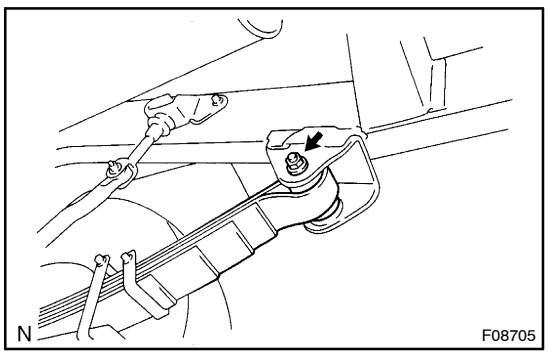

5. REMOVE REAR LEAF SPRING

(a) Remove the hanger pin nut.
Torque: 123 N·m (1,250 kgf·cm, 91 ft·lbf)

HINT:

- At the time of installation, after stabilizing the suspension, torque the nut.

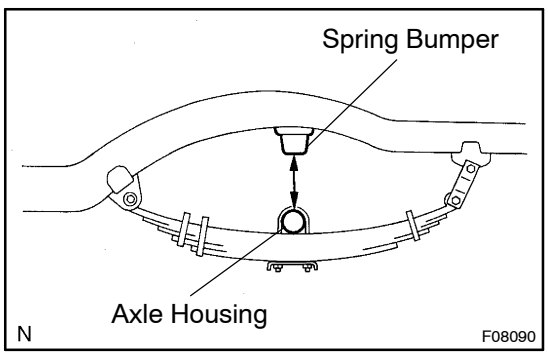

- At the time of installation, torque the nut after adjusting the clearance between the spring bumper and axle housing as specified in the chart below.

Model	Size
Super long standard type	115 mm (4.53 in.)
Super long heavy duty type	85 mm (3.35 in.)
Long van type	75 mm (2.95 in.)
Middle and short type	70 mm (2.76 in.)

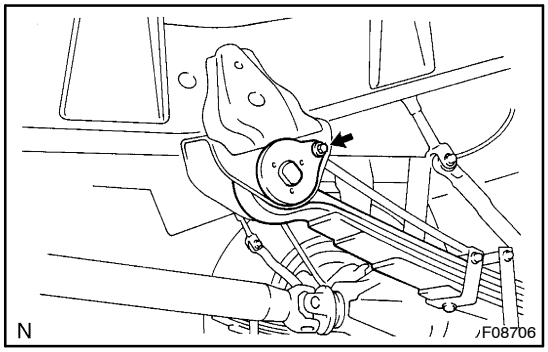

(b) Remove the hanger pin lock bolt.
Torque: 24 N·m (240 kgf·cm, 18 ft·lbf)
(c) Remove the hanger pin and washer.

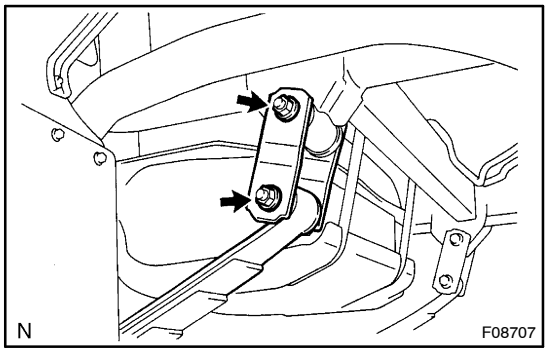

(d) Remove the 2 shackle pin mounting nuts and washers.
Torque: 91 N·m (930 kgf·cm, 67 ft·lbf)

HINT:

- At the time of installation, after stabilizing the suspension, torque the nut.

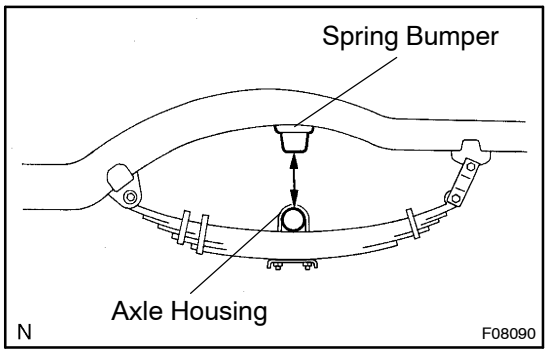

- For super long standard type only:
  At the time of installation, torque the nut, making sure that the clearance between the spring bumper and axle housing is 115 mm (4.53 in.).

(e) Remove the shackle pin, plate and bushings and rear leaf spring.