SA1SP–01

REPLACEMENT

1. Front and super long standard type rear side: REPLACE BUSHING

(a) Front side only:
Disassemble the leaf spring.

(b) Using a chisel and hammer, remove the inner bushing.

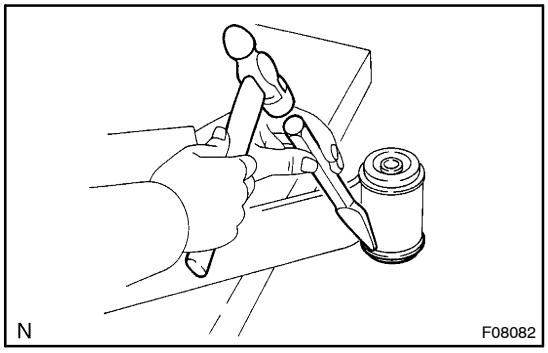

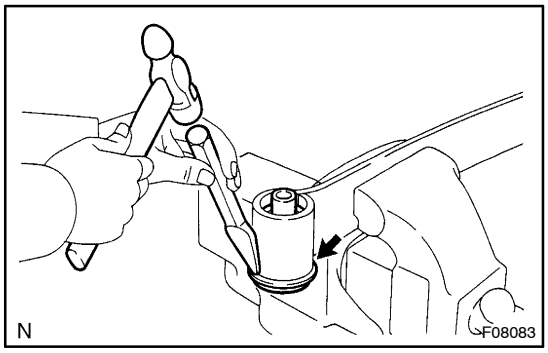

(c) Hammer the 2 diagonally positioned points of the bushing with a chisel to put flanges.

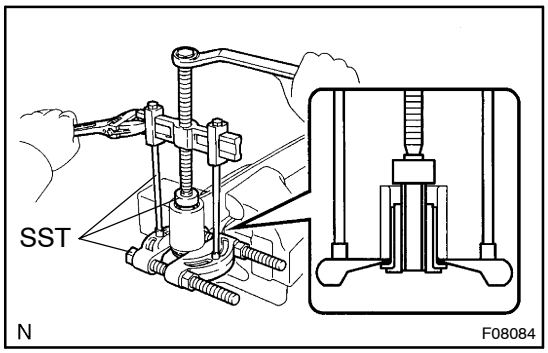

(d) Using a SST, remove the outer bushing.
SST 09950–00020, 09950–60010, 09950–40011 (09951–04020, 09953–04030, 09957–04010), 09950–50012 (09952–05010, 09954–05040, 09955–05040)

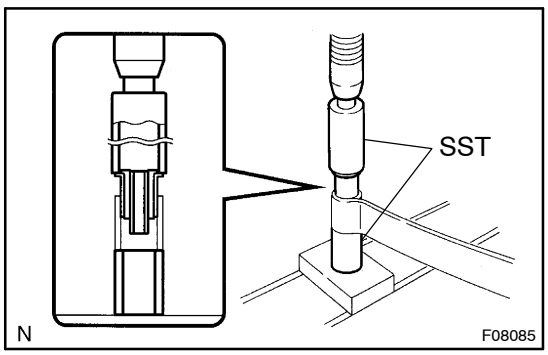

(e) Using a SST and press, install a new outer bushing.
SST 09226–10010, 09636–20010

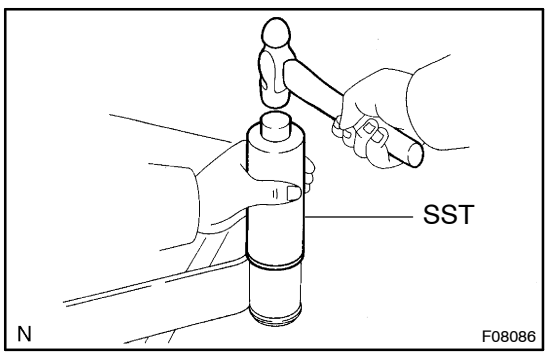

(f) Using a SST and hammer, install a new inner bushing.
SST 09226–10010

2. Except front and super long standard type rear side: REPLACE BUSHING

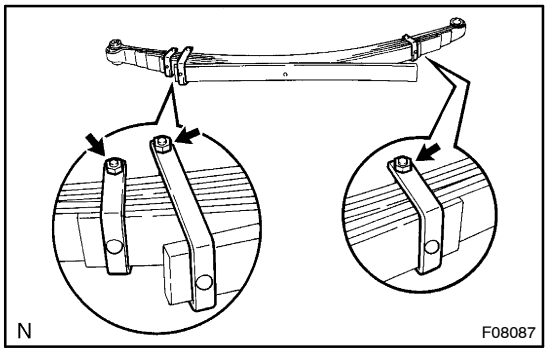

3. REPLACE LEAF SPRING

(a) Remove the 3 bolts, nuts and pipes.

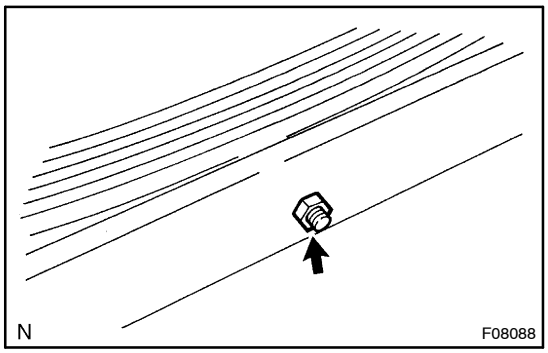

(b) Remove the nut, washer and pull out the center bolt.
(c) Disassemble the leaf spring.
(d) Reassemble new leaf spring.
(e) Install the center bolt and nut.
Torque: 49 N·m (500 kgf·cm, 36 ft·lbf)
(f) Install the 3 bolts, nuts and pipes.