CL0DO–01

DISASSEMBLY

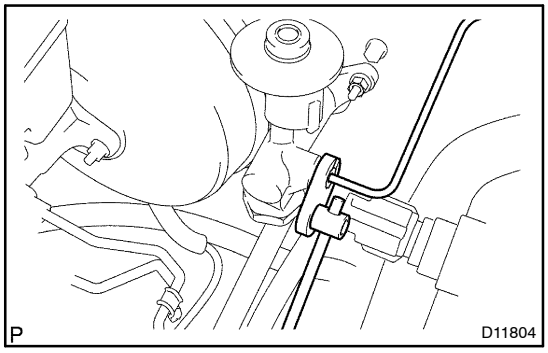

1. DRAW OUT FLUID WITH SYRINGE

2. DISCONNECT CLUTCH LINE

(a) Using SST, disconnect the clutch line.

(b) Use a container to catch the fluid.

SST 09023–00100

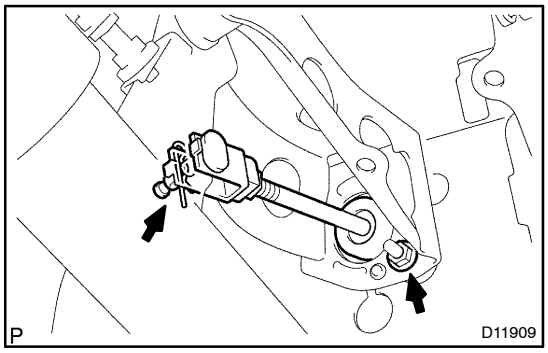

3. REMOVE CLIP AND CLEVIS PIN

4. REMOVE MOUNTING NUT AND PULL OUT MASTER CYLINDER

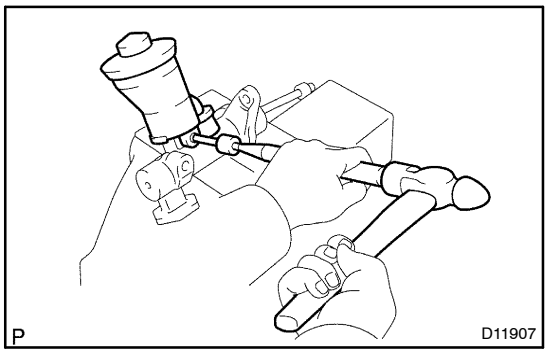

5. REMOVE RESERVOIR TANK

(a) Using a pin punch and hammer, drive out the slotted spring pin.

(b) Remove the reservoir tank and grommet.

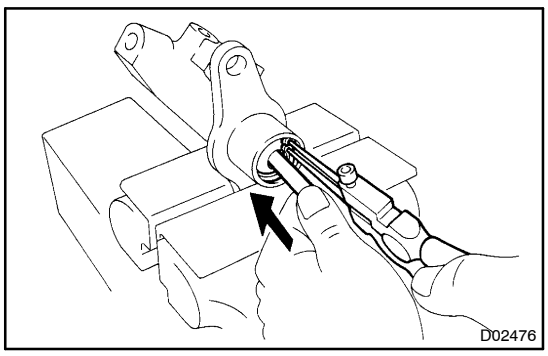

6. REMOVE PUSH ROD

Pull back the boot, and using snap ring pliers, remove the snap ring and washer.

7. REMOVE PISTON AND SPRING

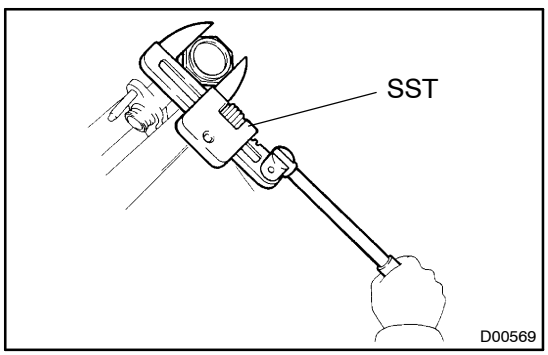

8. REMOVE CLUTCH ACCUMULATOR

Using the SST, remove the accumulator and gasket.

SST 09922–10010