CL0DP–01

REASSEMBLY

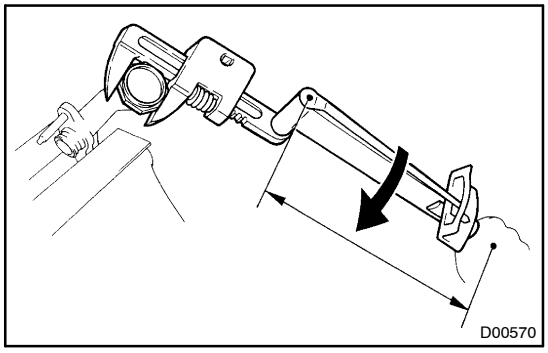

1. INSTALL CLUTCH ACCUMULATOR

Using the SST, install the accumulator with a new gasket.

SST 09922–10010

Torque: 32 N·m (330 kgf·cm, 24 ft·lbf)

HINT:

Use a torque wrench with a fulcrum length of 345 mm (13.58 in.).

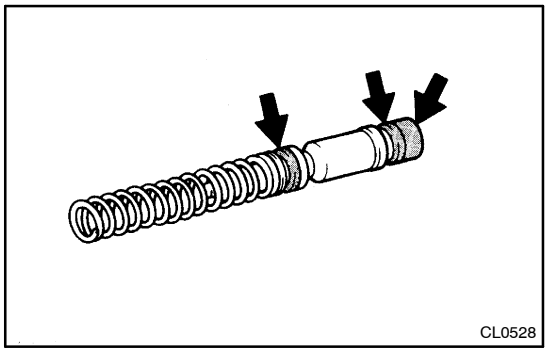

2. COAT PARTS WITH LITHIUM SOAP BASE GLYCOL GREASE, AS SHOWN

3. INSERT PISTON AND SPRING INTO CYLINDER

4. INSTALL PUSH ROD ASSEMBLY WITH SNAP RING

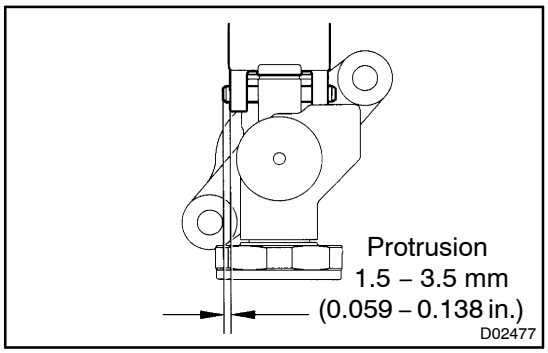

5. INSTALL RESERVOIR TANK

(a) Install the reservoir tank and a new grommet.

(b) Using a pin punch and hammer, drive in the slotted spring pin.

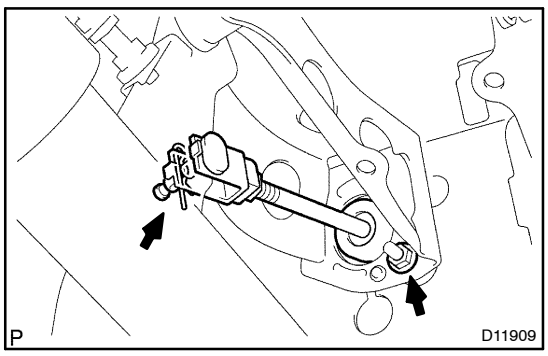

6. INSTALL MOUNTING NUTS AND PULL OUT MASTER CYLINDER

7. INSTALL CLIP AND CLEVIS PIN

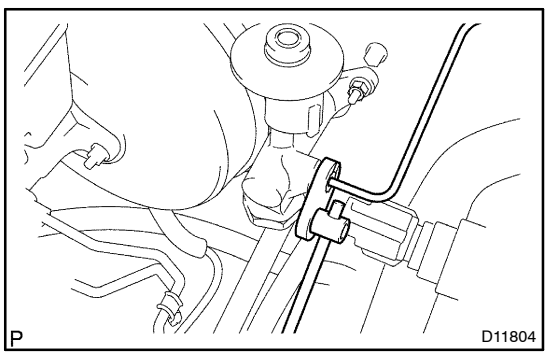

8. CONNECT CLUTCH LINE

(a) Using the SST, connect the clutch line.

SST 09023–00100

Torque: 15 N·m (155 kgf·cm, 11 ft·lbf)

(b) Use a container to catch the fluid.

9. ADD FLUID WITH SYRINGE