CLUTCH RELEASE CYLINDER

COMPONENTS

CL0DQ-01

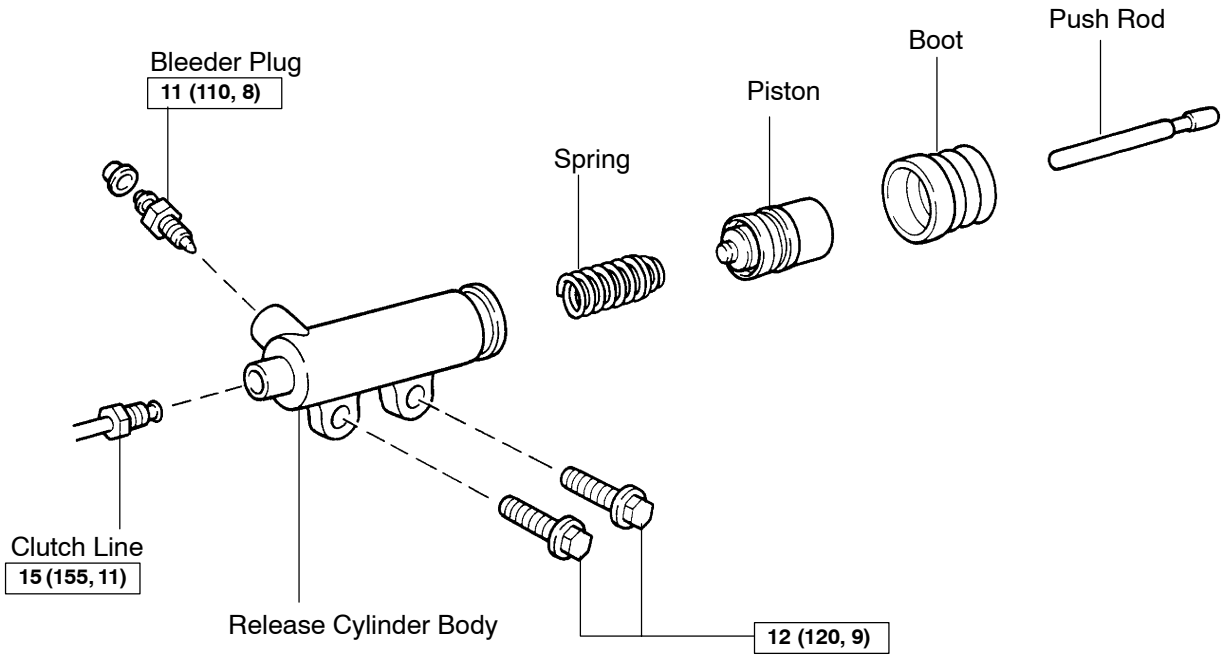

N·m (kgf·cm, ft·lbf) : Specified torque

D02472