CL0DS–01

REASSEMBLY

1. COAT PISTON WITH LITHIUM SOAP BASE GLYCOL GREASE, AS SHOWN

2. INSTALL PISTON WITH SPRING INTO CYLINDER

3. INSTALL BOOT WITH PUSH ROD TO CYLINDER

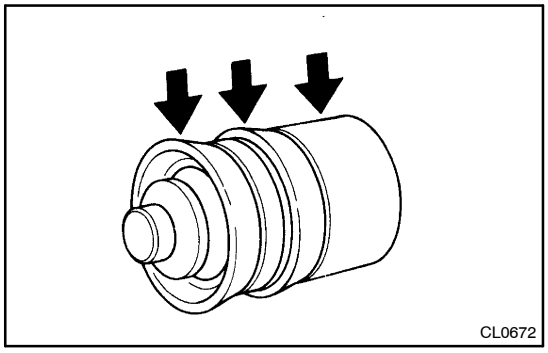

4. INSTALL RELEASE CYLINDER TO TRANSMISSION

(a) Temporarily connect the clutch hose to the release cylinder.

(b) Install the 2 bolts holding the release cylinder to the transmission.

Torque: 12 N·m (120 kgf·cm, 9 ft·lbf)

(c) Tighten the clutch hose.

Torque: 15 N·m (155 kgf·cm, 11 ft·lbf)

(d) Use a container to catch the fluid.

