CL00F–05

INSPECTION

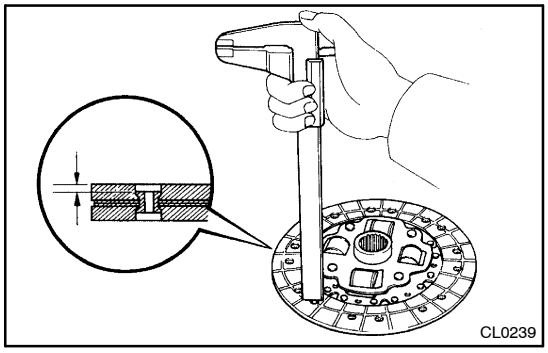

1. INSPECT CLUTCH DISC FOR WEAR OR DAMAGE

Using calipers, measure the rivet head depth.

Minimum rivet depth: 0.3 mm (0.012 in.)

If necessary, replace the clutch disc.

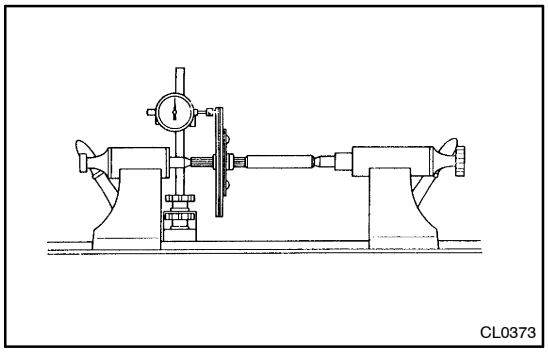

2. INSPECT CLUTCH DISC RUNOUT

Using a dial indicator, check the disc runout.

Maximum runout: 0.8 mm (0.031 in.)

If necessary, replace the clutch disc.

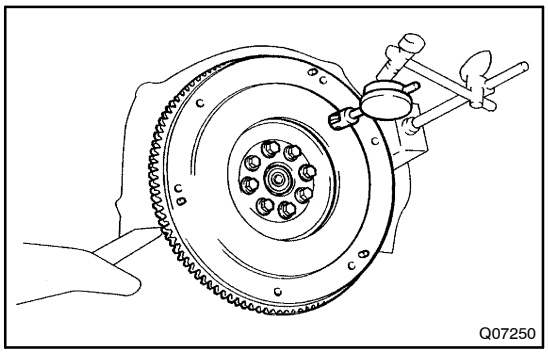

3. INSPECT FLYWHEEL RUNOUT

Using a dial indicator, check the flywheel runout.

Maximum runout: 0.1 mm (0.004 in.)

If necessary, replace the flywheel.

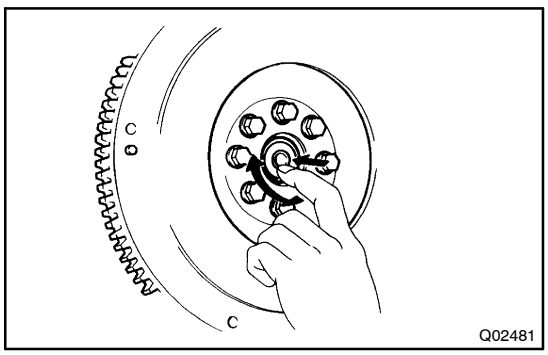

4. INSPECT PILOT BEARING

Turn the bearing by hand while applying force in the rotation direction.

If the bearing sticks or has much resistance, replace the pilot bearing.

HINT:

The bearing is permanently lubricated and requires no cleaning or lubrication.

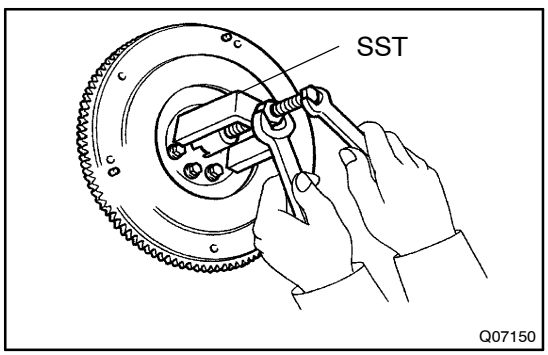

5. IF NECESSARY, REPLACE PILOT BEARING

(a) Remove the 2 bolts at diametrically opposite points.

(b) Using SST, remove the pilot bearing.

SST 09303–35011

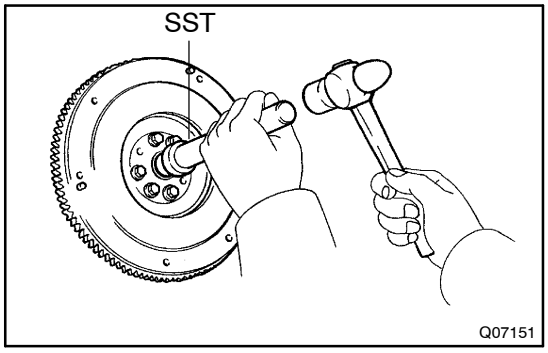

(c) Using SST and a hammer, install the pilot bearing.
SST 09304–30012

HINT:
After assembling the pilot bearing to the hub, make sure that it rotates smoothly.

(d) Install 2 new bolts.
Torque:
127 N·m (1,300 kgf·cm, 94 ft·lbf)

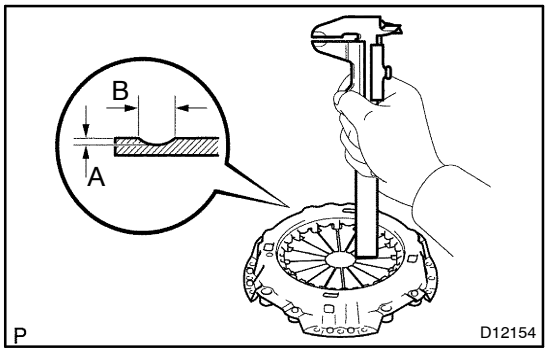

6. INSPECT DIAPHRAGM SPRING FOR WEAR

Using calipers, measure the diaphragm spring for depth and width of wear.

Maximum depth A: 0.6 mm (0.024 in.)
Maximum width B: 5.0 mm (0.197 in.)

If necessary, replace the clutch cover.

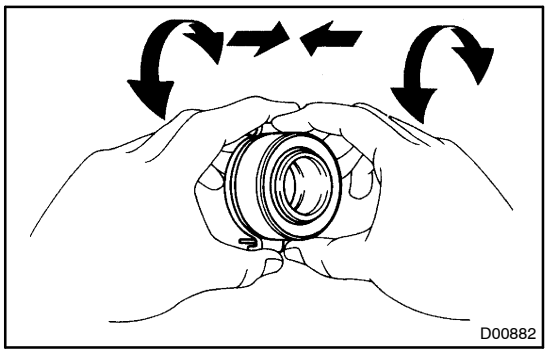

7. INSPECT RELEASE BEARING

Turn the bearing by hand while applying force in the axial direction.

HINT:
The bearing is permanently lubricated and requires no cleaning or lubrication.

If the bearing sticks or has much resistance, replace the release bearing.