# TIRE AND WHEEL

SA1A2–04

## INSPECTION

**1. INSPECT TIRE**

(a) Check the tires for wear and proper inflation pressure.
**Cold tire inflation pressure: (See page SS–8)**

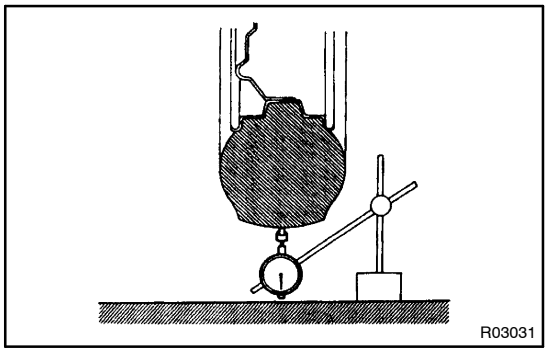


(b) Check the tire runout.
**Tire runout: 3.0 mm (0.118 in.) or less**

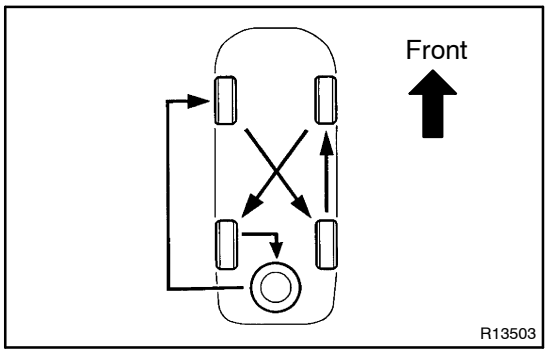


**2. ROTATE TIRE**

HINT:
See the illustration for how to rotate the tires when you include the spare tire in rotation.

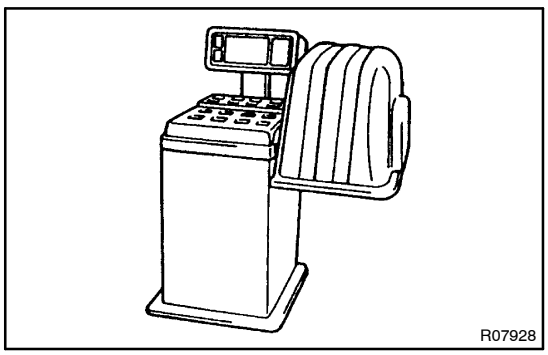


**3. INSPECT WHEEL BALANCE**

(a) Check and adjust the Off–the car balance.
(b) If necessary, check and adjust the On–the car balance.
**Imbalance after adjustment: 14.0 g (0.031 lb) or less**

**4. CHECK FRONT SUSPENSION FOR LOOSENESS**

**5. CHECK STEERING LINKAGE FOR LOOSENESS**

**6. CHECK BALL JOINT FOR LOOSENESS**

**7. CHECK SHOCK ABSORBER WORKS PROPERLY**

- Check for oil leak
- Check the mounting bushings for wear
- Bounce front and rear of the vehicle