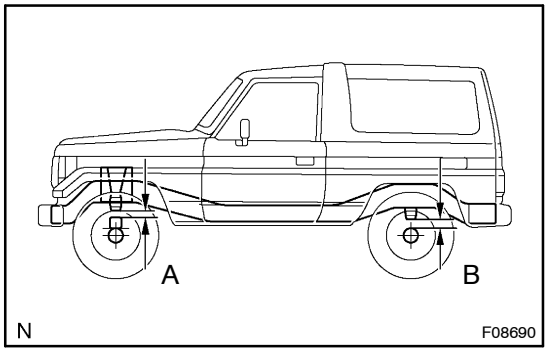

FRONT WHEEL ALIGNMENT

SA1A3–03

INSPECTION

1. MEASURE VEHICLE HEIGHT

Clearance:

A: Distance from the front axle housing to the follow spring

B: Distance from the rear axle housing to the bumper stopper

Model code	Clearance	
	Front mm (in.)	Rear mm (in.)
71 series	27 (1.06)	105 (4.13)
74 series	34 (1.34)	104 (4.09)
78 series	34 (1.34)	113 (4.45)
79 series	33 (1.30) *1 22 (0.87) *2	138 (5.43) *1 132 (5.20) *2

*1: Standard suspension

*2: Heavy duty suspension

If the clearance of the vehicle is not standard, level the vehicle by rocking it down.

If still not standard, check for bad springs or suspension parts.

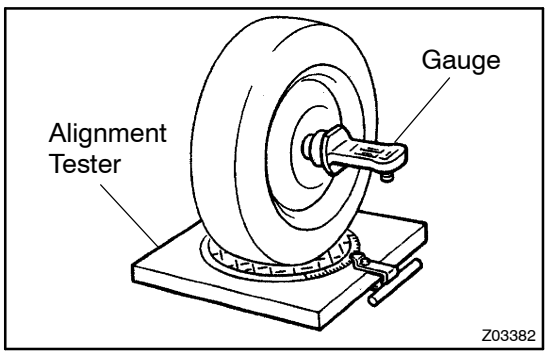

2. INSTALL CAMBER–CASTER–KINGPIN GAUGE OR POSITION VEHICLE ON WHEEL ALIGNMENT TESTER

Follow the specific instructions of the equipment manufacturer.

3. INSPECT CAMBER, CASTER AND STEERING AXIS INCLINATION

Camber	1° ± 45' (1° ± 0.75°)
Right–left error	45' (0.75°) or less
Caster	
79 series	3°35' ± 60' (3.58° ± 1.0°)
Others	4°20' ± 60' (4.33° ± 1.0°)
Right–left error	45' (0.75°) or less
Steering axis inclination	13° ± 45' (13° ± 0.75°)

Camber, caster and steering axis inclination are not adjustable. If the measurements are not within the specified values, inspect the suspension parts for damaged and/or worn out and replace them as necessary.

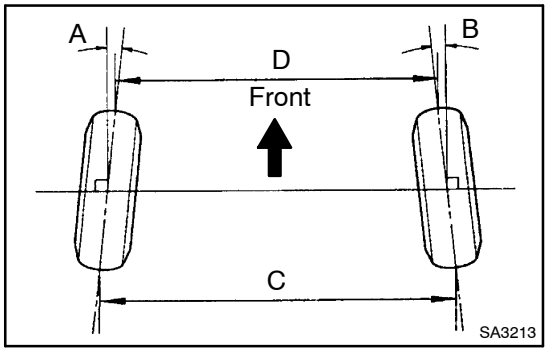

4. INSPECT TOE–IN

Bias ply tire	
Toe–in (total)	A + B: 0°12' ± 12' (0.2° ± 0.2°) C – D: 2 ± 2 mm (0.08 ± 0.08 in.)
Radial tire	
Toe–in (total)	A + B: 0°00' ± 12' (0.0° ± 0.2°) C – D: 0 ± 2 mm (0.00 ± 0.08 in.)

If the toe–in is not within the specification, adjust it by the tie rod ends.

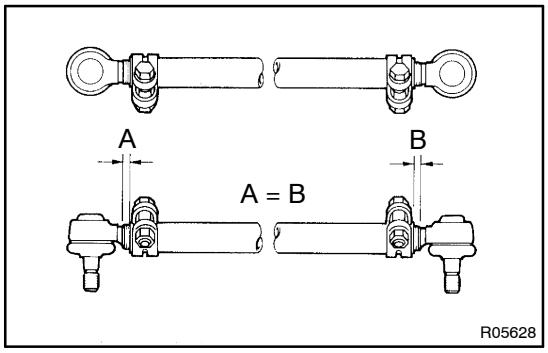

5. ADJUST TOE–IN

(a) Loosen the clamp bolts and nuts.

(b) Adjust the toe–in to the correct value by turning the tie rod.

HINT:

Make sure that the lengths of the left and right tie rod ends are the same.

(c) Torque the clamp bolts and nuts.

Torque: 37 N·m (375 kgf·cm, 27 ft·lbf)

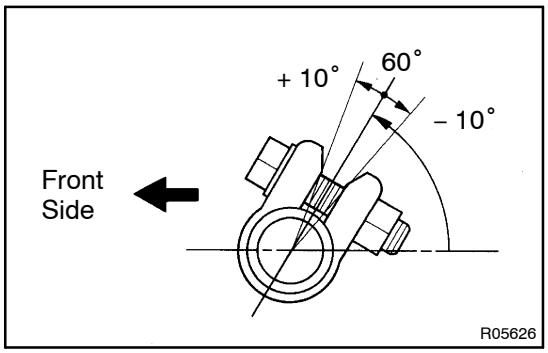

HINT:

The clamp's opening must be positioned at the rear of the tie rod and faced within 60° ± 10° from the vehicle axis.

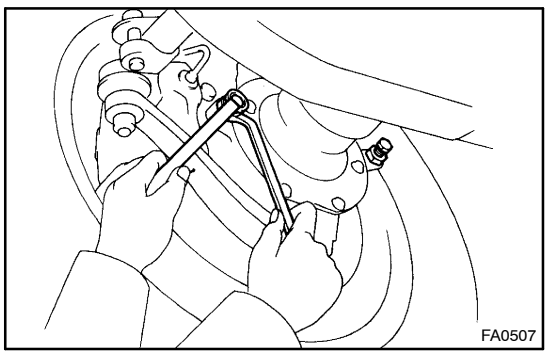

6. INSPECT WHEEL ANGLE

(a) Remove the caps of the knuckle stopper bolts and check the steering angles.

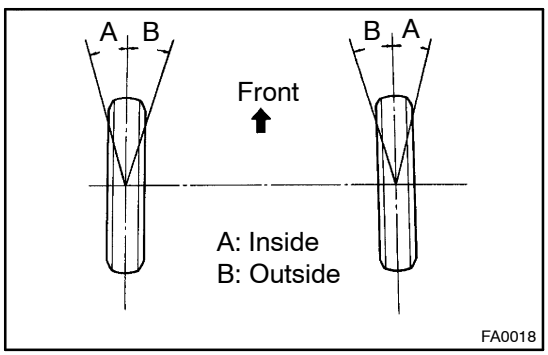

(b) Turn the steering wheel fully, and measure the turning angle.

Inside wheel	32° (29° – 32°)
Outside wheel (Reference)	28°

HINT:

When the steering wheel is fully turned, make sure that the wheel is not touching the body or brake flexible hose.

If the maximum steering angle differs from the standard value, adjust the wheel angle with the knuckle stopper bolts.

Torque: 44 N·m (450 kgf·cm, 33 ft·lbf)

If the wheel angle still cannot be adjusted within the limit, inspect and replace the damaged or worn steering parts.