September 2017

BBG

BODY BUILDER'S GUIDE

Land Cruiser 70 series

TOYOTA

Pub. No. BBGJ1007

INTRODUCTION

This guidebook contains descriptions of various basic matters required for and cautions to be exercised when body-building or making alterations to the base vehicles in cab and chassis conditions.

All body-builders are requested to use this guidebook in design and conducting their body-building and alteration work, always keeping in mind the direct or indirect effect that the body-building or alteration job is expected to have on the component parts and the system of the base vehicles.

The description in this guidebook is aimed at the vehicles manufactured in and after September, 2017. Note that all the vehicles manufactured subsequently may be covered by different descriptions due to specification changes, etc. This guidebook does not contain any service data or any description on methods of repair.

C&A Operations Division
TOYOTA MOTOR CORPORATION
Nisshin Education & Training Center
5-210, Sakae
Nisshin City, Aichi Prefecture
JAPAN 470-0113

CONTENTS

【1】BASIC MATTERS FOR BODY-BUILDING AND ALTERATIONS ····· 1

1. Compliance with laws and regulations ····· 1

2. Securing basic performance and safety requirements ····· 1

[1] Vehicle width ····· 2
[2] Rear overhang ····· 2
[3] Limitation of front axle load ratio (when loaded with cargo) ····· 3
[4] Height of gravity center ····· 3
[5] Weight ····· 5

3. No alterations to important safety parts ····· 7

4. Preparation of operation manual and/or maintenance & inspection manual and their installation on vehicles ····· 7

5. Establishing after-sale service system ····· 7

6. Model structure ····· 8

[1] Meaning of model code ····· 8
[2] List of vehicle models ····· 9

【2】DAMAGE WARNINGS ON MECHANISMS AND SYSTEMS IN BODY-BUI LDING OR MAKING ALTERATIONS ····· 10

1. Engine and engine compartment ····· 10

2. Frames ····· 10

3. Suspension ····· 11

[1] Front suspension ····· 11
[2] Rear suspension ····· 11
[3] Tire ····· 11
[4] Bound limit of tire and differential ····· 11
[5] Data for calculating the ground clearance of frame reference line ····· 12

4. Body ····· 25

[1] Building and alterations to rear body and deck ····· 25
[2] Securing rear wheel house space ····· 28
[3] Protection against thermal effect of exhaust system ····· 28

5. Brake ····· 29

[1] Readjustment of LSPV ····· 29

6. Drive units ····· 34

[1] Transmission ····· 34
[2] Propeller shaft ····· 34

7. Exhaust pipe ····· 34

8. Battery ····· 35

[1] Wiring precautions ····· 35
[2] Change of battery mounting position ····· 35
[3] No overlaid connection of battery cables ····· 36
[4] Replacement battery cable ····· 36
[5] Serviceability ····· 36

9. Fuel tank ····· **37**
[1] Addition and relocation of fuel tank ····· 37
[2] Fuel tank position (steel tank) ····· 37
[3] Serviceability ····· 37

10. Spare tire carrier ····· **38**
[1] General preventive measures ····· 38
[2] Preventive measure for addition or alteration to spare tire carrier of wind-up type ····· 39
[3] Mounting position ····· 40
[4] Spare tire carrier handle ····· 41

11. Electrical wirings ····· **43**
[1] Consideration of existing vehicle wirings ····· 43
[2] Wiring addition ····· 45
[3] Fuse ····· 49
[4] Switch ····· 49
[5] Power supply ····· 50
[6] Electrical wiring diagrams ····· 51

12. Mounting rear combination lamp ····· **52**

13. License plate and license lamp ····· **53**

14. Reflector ····· **53**

【3】DRAWINGS ····· **54**

1. Cab & Chassis drawing ····· **54**

2. Frame drawing ····· **58**

3. Exhaust pipe drawing ····· **64**

4. Fuel tank installation-related drawings (Drawings for fuel tank) ····· **68**

5. Rear combination lamp-related chart ····· **70**

6. License lamp-related chart ····· **71**

7. Alternator output characteristic ····· **73**

【4】MAJOR TECHNICAL SPECIFICATIONS ····· **75**

【1】BASIC MATTERS FOR BODY-BUILDING AND ALTERATIONS

1. Compliance with laws and regulations

Body builders are required to design and fabricate their vehicles in such a manner that the vehicles built or altered by them conform to the laws and regulations including safety and exhaust gas standards applied to finished vehicles of their respective countries.

· In making alterations to vehicles, care should be taken to design and fabricate them in such a manner as to satisfy various related laws and regulations with an ample allowance.(Such laws and regulations always represent the minimum limit of requirements to be met by the particular body-building or alteration work.)

· Be sure that the materials used for body-building or alterations sufficiently meet the legal requirements, the performance and safety standards, and that the resulting vehicle should be as lightweight as possible.

· After body-building or alteration work is complete, check to see whether the materials or parts used for such work are produced as designed and satisfy predetermined performance requirements and functions, and also whether they contain no defects.

2. Securing basic performance and safety requirements

All body-builders are required to make sure that the inherent functions of the base vehicle are not lost by the particular body-building or alterations. Also, make sufficient study to make sure that any changes of the standard parts are free of functional problems from both technical and safety points of view.

· The forward field of view should not be blocked by the body-building or alterations.

· The chassis should not be damaged by the body-building or alterations.

· No difference in weight between right and left wheels should occur due to the body-building or alterations.

· All body-building jobs should be conducted in a manner avoiding local concentration of the load on the chassis frame. In order to distribute the load over the frames, all the wheels should be located on the same plane without distorting the frame.

· The materials and parts involved in the body-building or alteration work should be designed and fabricated to facilitate the inspection and maintenance of the chassis parts after they are mounted on the vehicles.

Limitations are set for the length, width, height and weight of the parts mounted according to the particular base vehicle. Any restrictions which may be imposed in each country should be complied with.

[1] Vehicle width

In order to secure safe drive, the width of a mounted part should be 60 mm maximum as measured from the outermost point of the cab of the base vehicle (not including the outside mirror).

[2] Rear overhang

The rear overhang should be as shown in the following depending on the body style and the length of the wheelbase of the base vehicle.

Body style	Rear overhang
Vehicle with cargo not protruding from rear end Ex: Van	$R \leqq \frac{2}{3} \ell$ 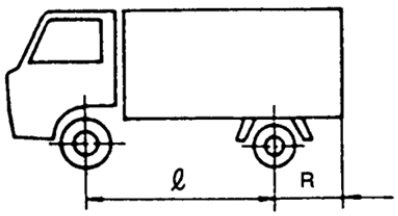 Y-088
Vehicle with cargo protruding from rear end Ex: Cargo truck	$R \leqq \frac{1}{2} \ell$ 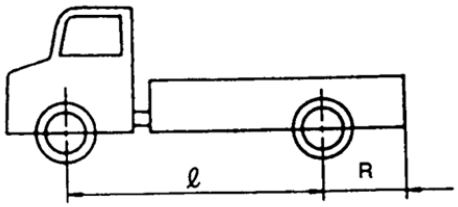 Y-089

The rear overhang is defined as the horizontal distance from the rear axle center to the rear end.

[3] Limitation of front axle load ratio (when loaded with cargo)

In order to secure running safety, the ratio of the load exerted on the front axle should be set as follows (Distribute the cargo weight uniformly over the whole vehicle).

$$\text{Limit: Front axle load ratio(\%)} \left(\frac{\text{Front axle weight}}{\text{Total vehicle weight}}\right) \text{X100\%} \geqq 20\%$$

[4] Height of gravity center

The height of gravity center after body-building or alterations (unloaded vehicle) should be within the tolerance shown in the table below. Install heavy building components in the vicinity of gravity center.

Models	Gravity center height after building or alteration	Gravity center height of base vehicle (C&C)
GRJ79L-TJMRK3	Less than 1000	700
HZJ79L-TJMRS3	↑	↑
VDJ79R-TJMRYQ3	↑	↑
VDJ79R-TJMNYQ3	↑	↑
VDJ79R-DKMRYQ3	↑	730

· Example calculation of gravity center height

How to determine vertical gravity center				
		Weight = W (kg)	Vertical gravity center = H (m)	Moment (W x H) (kg-m)
Chassis w/cab		800	0.555	800 x 0.555 = 444.00
Built or attached part	Floor joist ①	45	$565 + \frac{155}{2} = 642.5 \fallingdotseq 0.640$	45 x 0.640 = 28.80
	Rear body floor ②	70	$565 + 155 + \frac{70}{2} = 755 \fallingdotseq 0.755$	70 x 0.755 = 52.85
	Rear body front ③	30	$565 + 155 + \frac{1200}{2} = 1320 \fallingdotseq 1.320$	30 x 1.320 = 39.60
	Rear body side ④	130	$565 + 155 + \frac{1200}{2} = 1320 \fallingdotseq 1.320$	130 x 1.320 = 171.60
	Rear body tail ⑤	45	$565 + 155 + \frac{1200}{2} = 1320 \fallingdotseq 1.320$	45 x 1.320 = 59.40
	Rear body roof ⑥	35	$565 + 155 + 70 + 1130 + \frac{50}{2} = 1945 \fallingdotseq 1.945$	35 x 1.945 = 68.08
	Total	355		
Subtotal (Vehicle weight)		1155		864.33
Gravity center height		$\text{Gravity center height} \frac{\text{Total moment}}{\text{Vehicle weigh}}$ $= \frac{864.33}{1155}$ $= 0.7483 \rightarrow 0.748\ \text{m}$		
Related dimensions		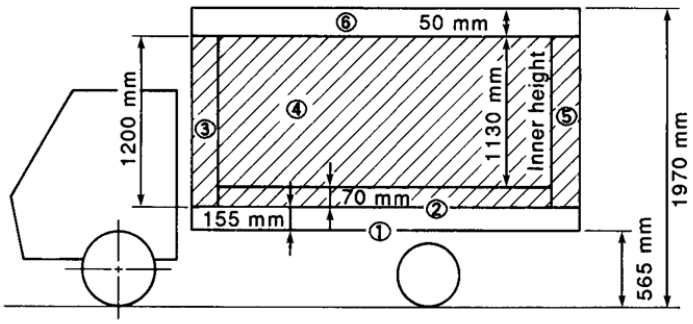 Note : 565 mm = Frame reference height after building or alteration J-140		

[5] Weight

(1) Weight check

Measure and determine the curb weight of the built or altered vehicle. Take a measurement of the front axle weight and the rear axle weight separately. (Each value must not be more than their respective tolerances.)

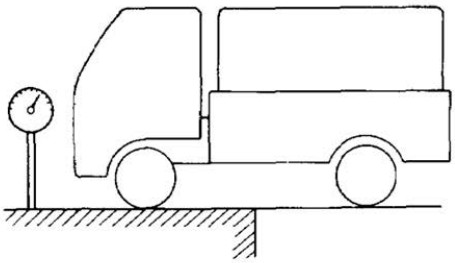

Distribution of front wheel weight

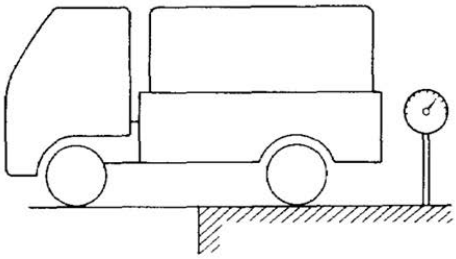

Distribution of rear wheel weight

U-088 U-089

Curb weight

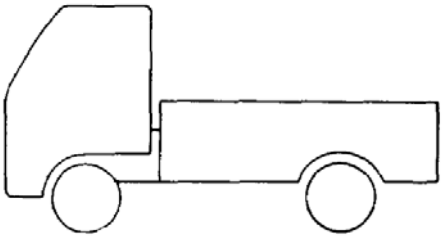

With all optional parts, equipment and the rear body with the fuel tank filled up

U-090

Overall vehicle weight

Overall front axle weight + Overall rear axle weight

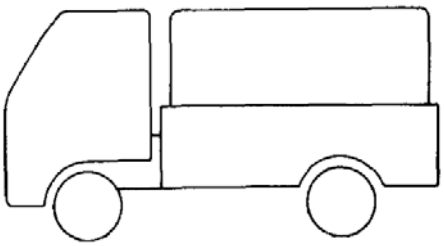

With all optional parts, equipment and the rear body with the fuel tank filled up

+

All passengers and cargo to full capacity

U-091

(2) Relation between building or alteration weight and load（Example)

Item \ Model	VDJ79R-T JMRYQ3
C.W. of base vehicle (C&C)	2,165 ~ 2,220
Special equipment, accessories, permanent attachments	A
Total weight of passengers, cargos and baggages	B
G.V.W. of finished vehicle	3,400

In the case where the weight of the finished vehicle [C.W. of base vehicle (C&C) + A] increases, the maximum allowable load is reduced as the G.V.W. is fixed.

C.W. of base vehicle (C&C)	Weight of built or altered equipment	Passengers and cargo	G.V.W.
2,165 ~ 2,220 + A + B ≦ 3,400			

(3) Relation between overall vehicle weight and maximum allowable axle weight

(F) = Front axle weight after building or alteration ≦ Front G.A.W.R.

(R) = Rear axle weight after building or alteration ≦ Rear G.A.W.R.

(F) + (R) ≦ G.V.W.

Refer to Major Technical Informations.

3. No alterations to important safety parts

The important safety parts and components (such as the front axle, steering-related and brake-related parts) must not be modified (either by welding, reinforcement, machining, heating or otherwise).

4. Preparation of operation manual and/or maintenance & inspection manual and their installation on vehicles

· In the event that the body-building or alterations cause a change in the procedure for operation, maintenance, inspection or adjustment of the standard vehicle, an operation manual should be prepared and installed on the vehicle.

· An operation manual and/or a maintenance & inspection manual specifying the procedure for the operation, maintenance, inspection and adjustment including inspection intervals of the particular building or alterations should be prepared and installed in the vehicle.

5. Establishing after-sale service system

Take adequate care to establish an after-sale service system for the parts built or altered.

6. Model structure

[1] Meaning of model code

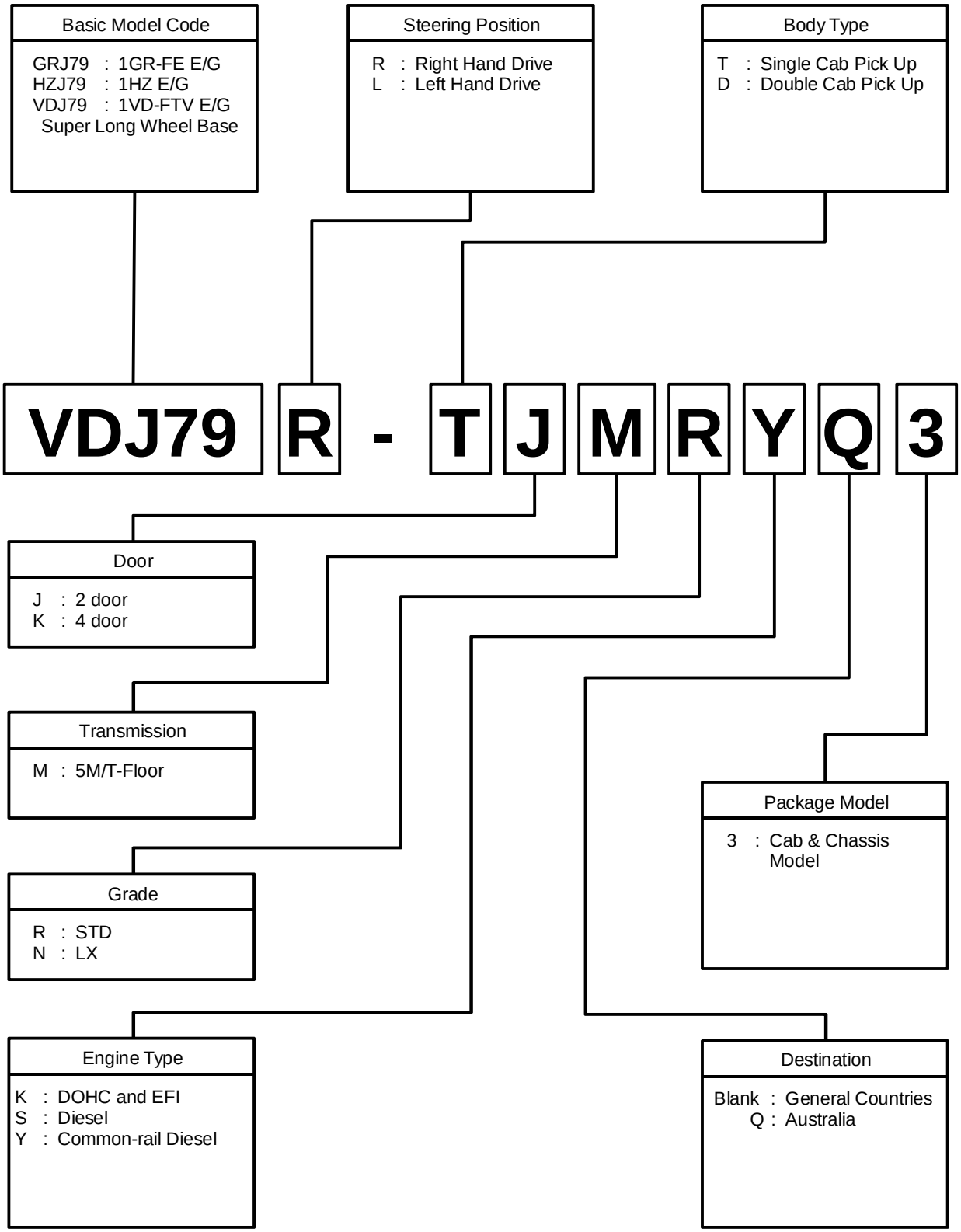

[2] List of vehicle models

Destination		General		Australia	
Wheel Base		Super Long			
Body Type		Pick Up			
Grade		STD		STD	LX
Steering Position					
Engine	Transmission	LHD	RHD	RHD	
1GR-FE	5M/T	GRJ79L-TJMRK3			
1HZ	5M/T	HZJ79L-TJMRS3			
1VD-FTV	5M/T			VDJ79R-TJMRYQ3 DKMRYQ3	VDJ79R-TJMNYQ3

【2】DAMAGE WARNINGS ON MECHANISMS AND SYSTEMS IN BODY-BUILDING OR MAKING ALTERATIONS

1. Engine and engine compartment

Engine & Component must not be modified.

2. Frames

· The frame must not be modified.

· When doing conversion, use standard deck mounts of frame. (see frame drawing)

3. Suspension

[1] Front suspension

Don't alter the component parts of the front suspension in any event. Also, don't change the specifications as it would adversely affect the vehicle performance.

[2] Rear suspension

① Don' alter the component parts of the rear suspension in any event. Also, don' change the specifications as it would adversely affect the performance and propeller shaft function.

② In building or making alterations to the vehicle, take adequate care not to damage the leaf spring. Should the leaf spring be damaged, change the whole assembly. (Don't change individual spring plate units, and don't reuse spring plates.)

[3] Tire

Don't use any tire or disc wheel other than specified for the particular vehicle.

[4] Bound limit of tire and differential

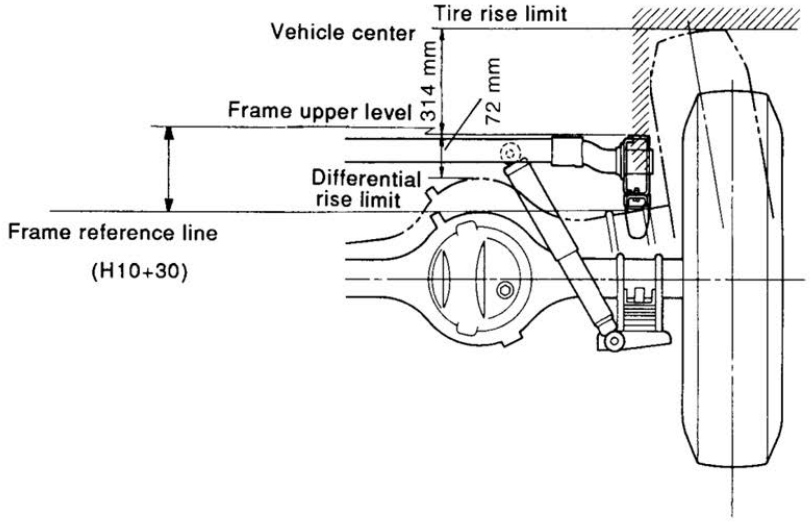

J-040

[5] Data for calculating the ground clearance of frame reference line

The ground clearance of the frame reference line should be calculated using the following formulae.

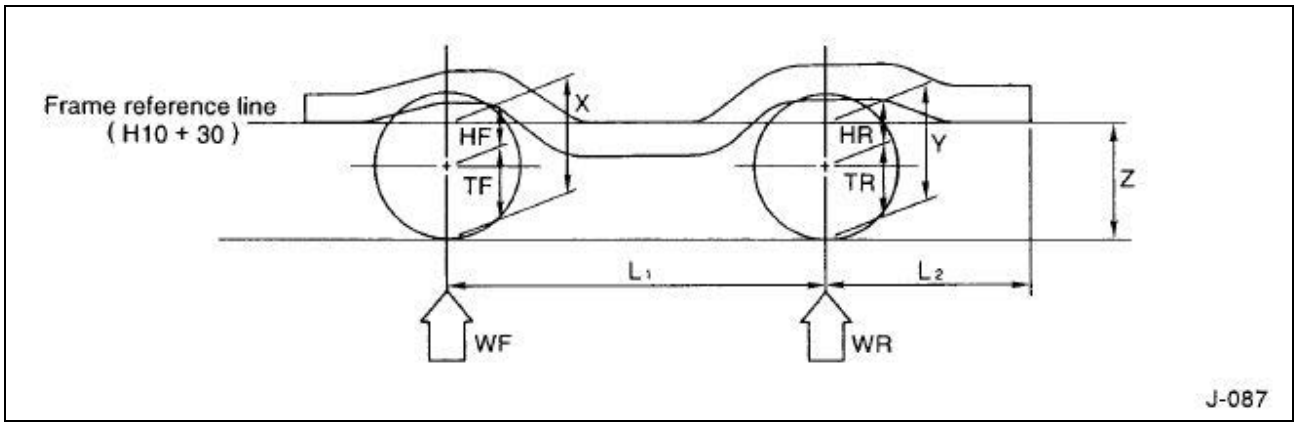

$X = HF + TF$

$Y = HR + TR$

$$Z = Y + \frac{(Y-X) \times L_2}{L_1}$$

X	Ground clearance of frame reference line at front wheel center line (mm)
Y	Ground clearance of frame reference line above rear wheel center line (mm)
Z	Ground clearance of frame reference line of frame rear end (mm)
WF	Front axle load (N)
WR	Rear axle load (N)
L_1	Wheelbase (mm)
L_2	Frame rear overhang (mm)
TF	Front tire radius (mm)
TR	Rear tire radius (mm)
HF	Distance from front wheel center to frame reference line (mm)
HR	Distance from rear wheel center to frame reference line (mm)

(1) How to determine the distance from wheel center to frame reference line

The distance from the wheel center to the frame reference line should be determined by calculating the single-wheel sprung loads and then either by reading from the spring characteristic curve or calculating according to the following equations.

$$Wf = \frac{WF - W_1}{2}$$

$$Wr = \frac{WR - W_2}{2}$$

$$HF = H_0 \frac{Wf}{K}$$

$$HR = H_0 \frac{Wr}{K}$$

Wf	Single-wheel sprung load (front wheel) (N)
Wr	Single-wheel sprung load (rear wheel) (N)
WF	Front axle load (N)
WR	Rear axle load (N)
W_1	Unsprung load (front axle) (N)
W_2	Unsprung load (rear axle) (N)
H_0	Distance from wheel center to frame reference line with 0-N single-wheel sprung load (mm)
K	Spring constant (N/mm)

(2) Example of calculation

Let us calculate the frame reference line height from ground, Y, at the rear wheel center after rebuilding using the model HZJ79L-TJMRS3 as an example. Suppose the rear axle weight after rebuilding as 13000N.

① Obtain the single wheel sprung load for rear wheel, Wr, using the following equation.

$$Wr = \frac{WR - W2}{2} \overset{\text{ex.}}{=} \frac{13000 - 2453}{2} = 5273.5N$$

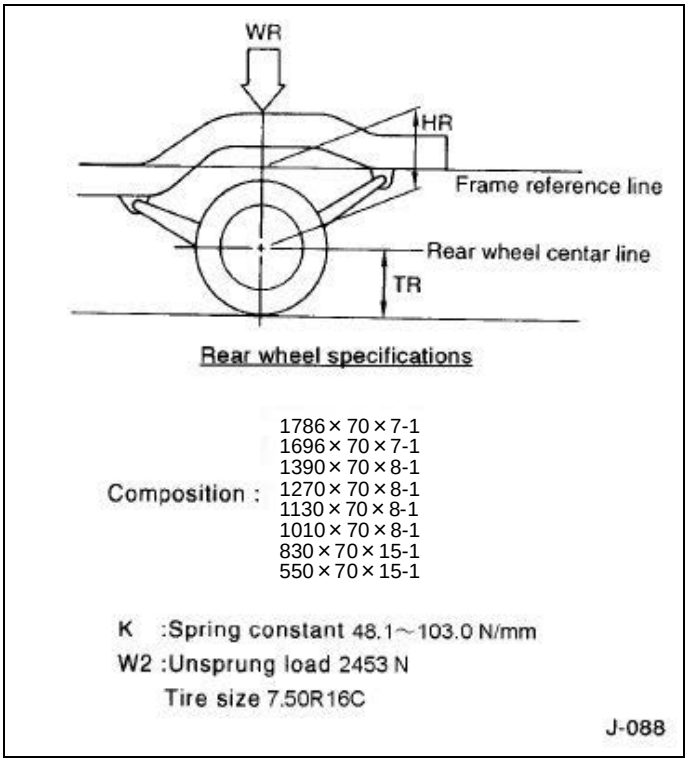

(3) Spring characteristics curve diagram

Front suspension (1/7)

Vehicle Models
· GRJ79L-TJMRK3

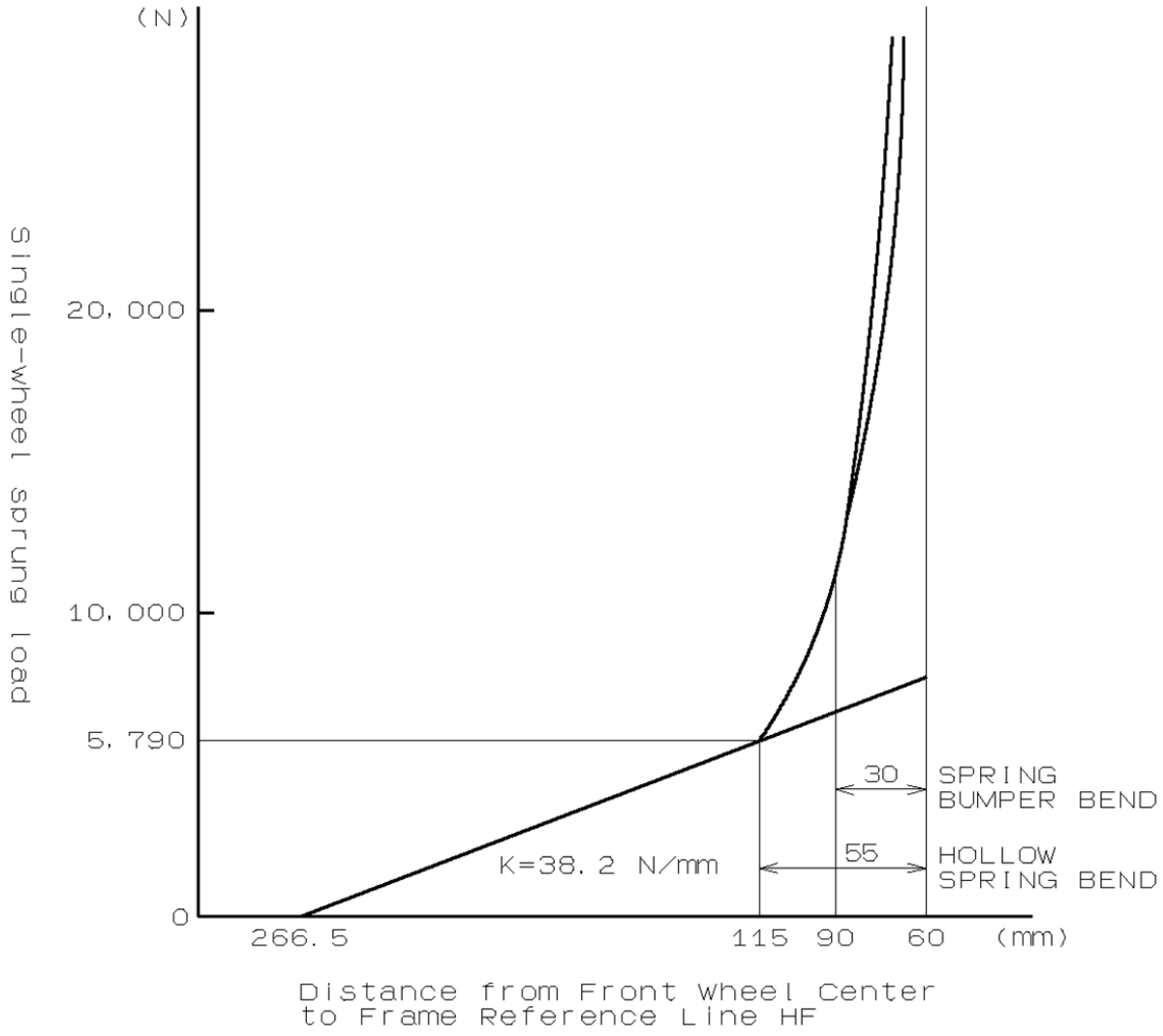

Front suspension (2/7)

Vehicle Models
· HZJ79L-TJMRS3

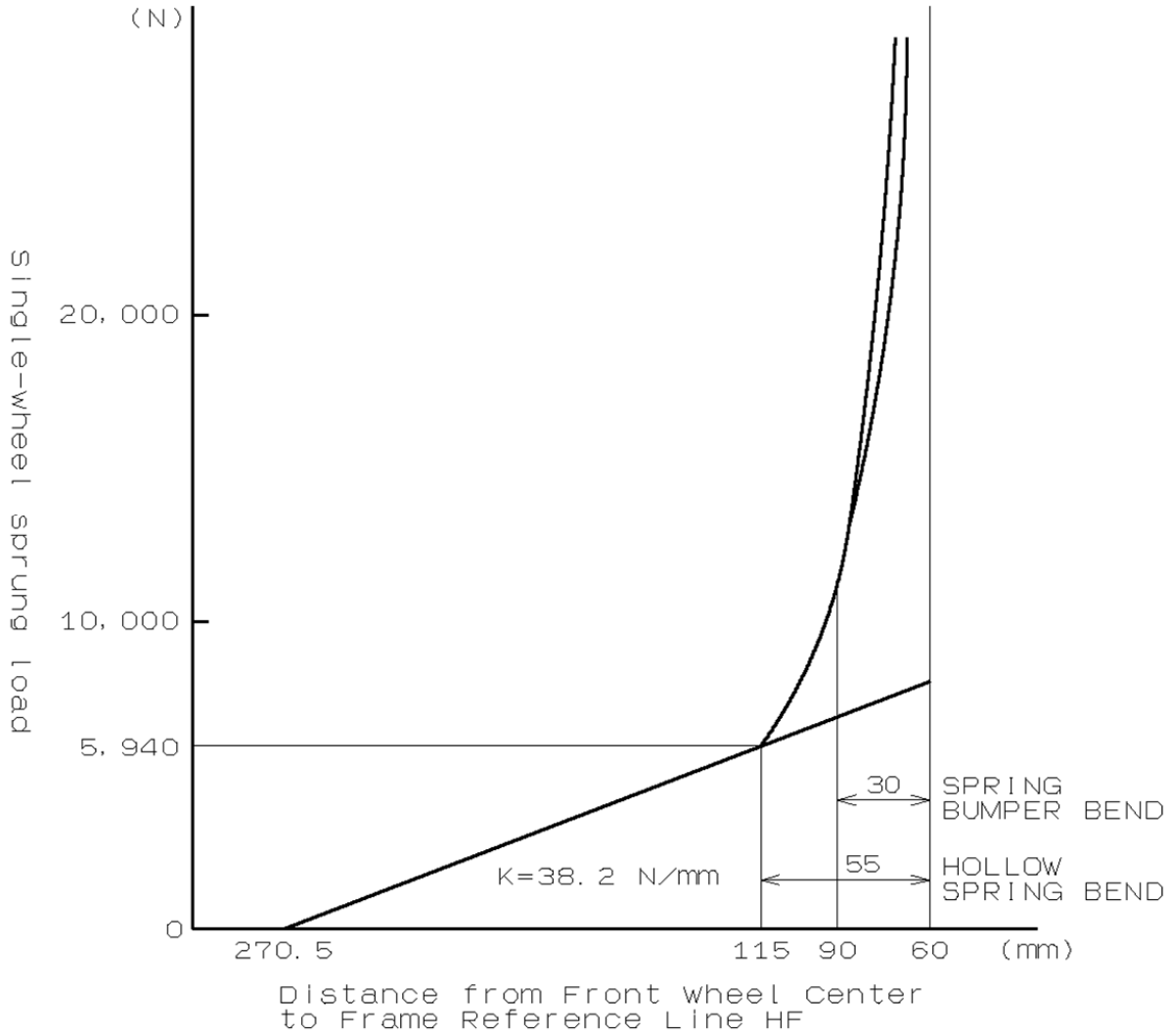

Front suspension (3/7)

Vehicle Models
· GRJ79L-TJMRK3 · HZJ79L-TJMRS3 (Heavy Duty with winch)

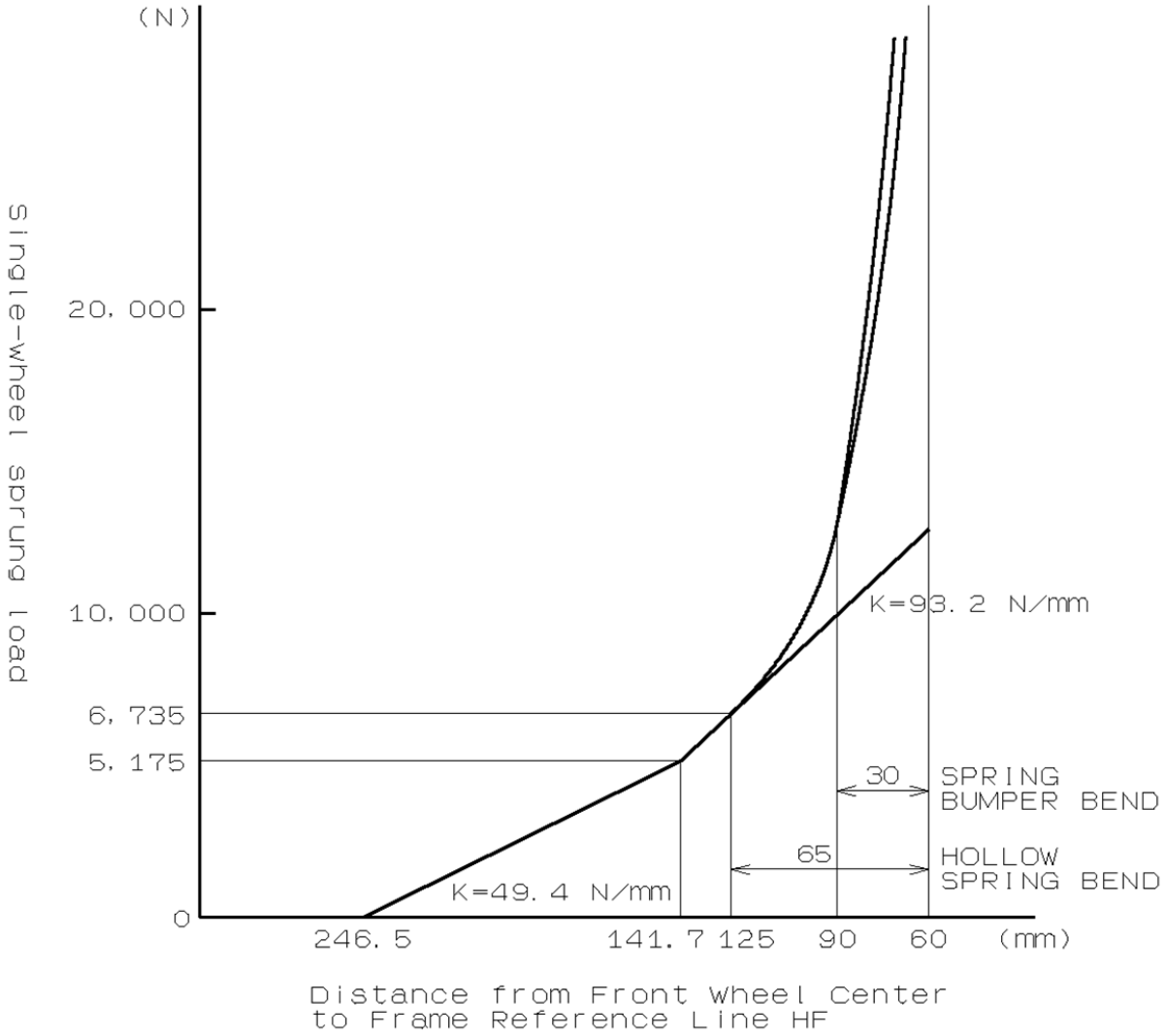

Front suspension (4/7)

Vehicle Models
· GRJ79L-TJMRK3 · HZJ79L-TJMRS3 (Heavy Duty without winch)

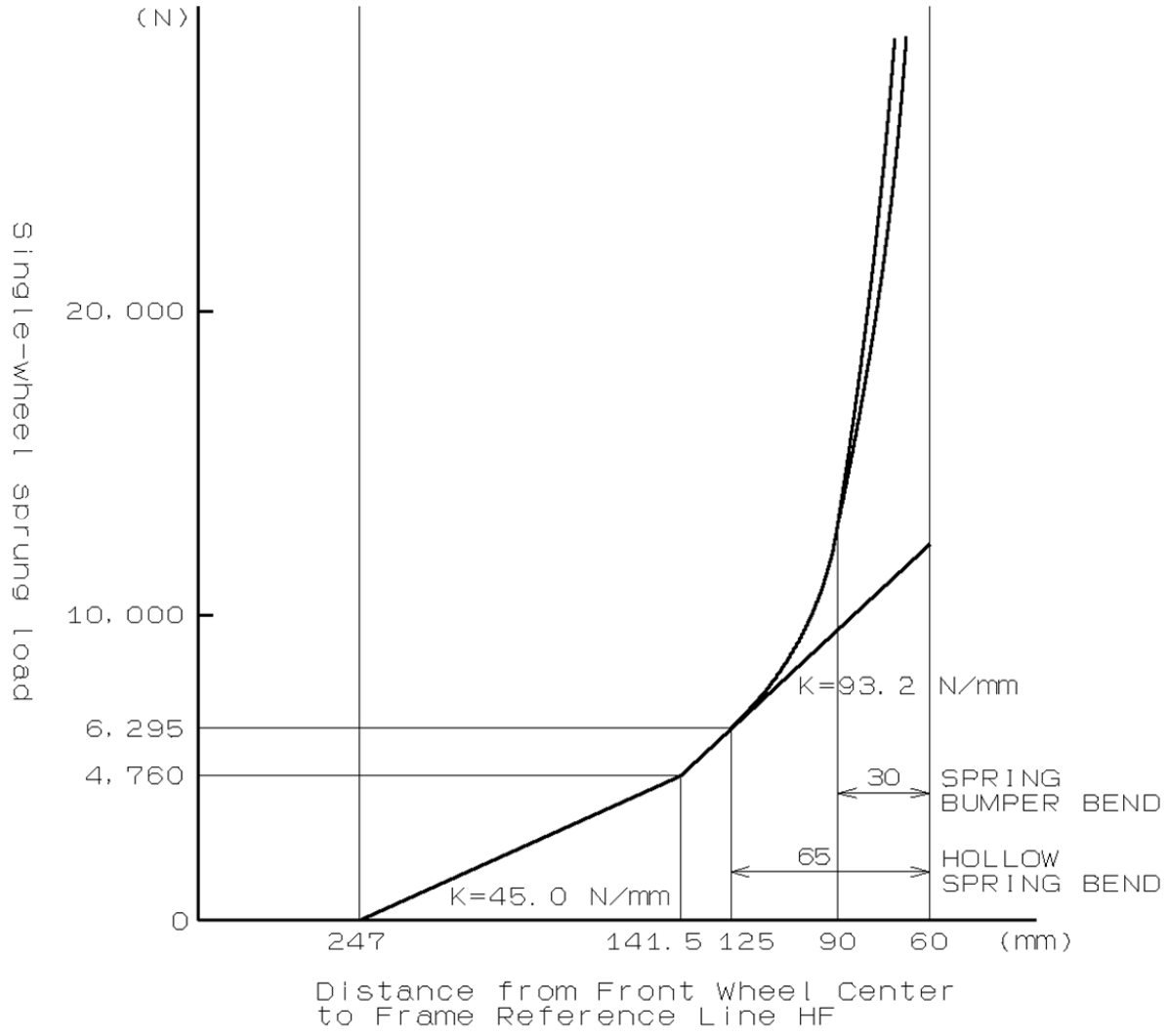

Front suspension (5/7)

Vehicle Models
· GRJ79L-TJMRK3 · HZJ79L-TJMRS3 (with optional winch)

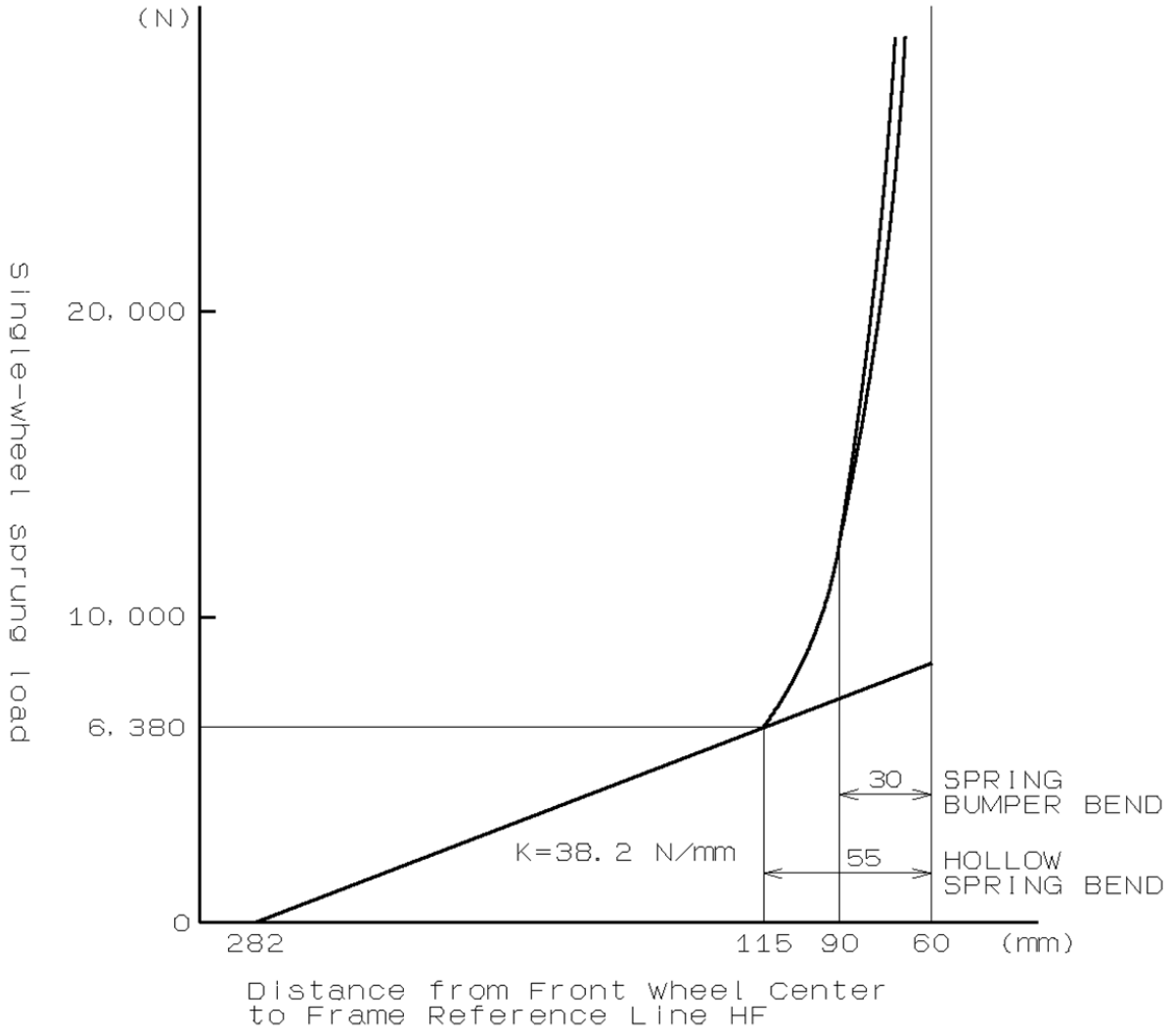

Front suspension (6/7)

Vehicle Models
· VDJ79R-TJMRYQ3 · VDJ79R-TJMNYQ3

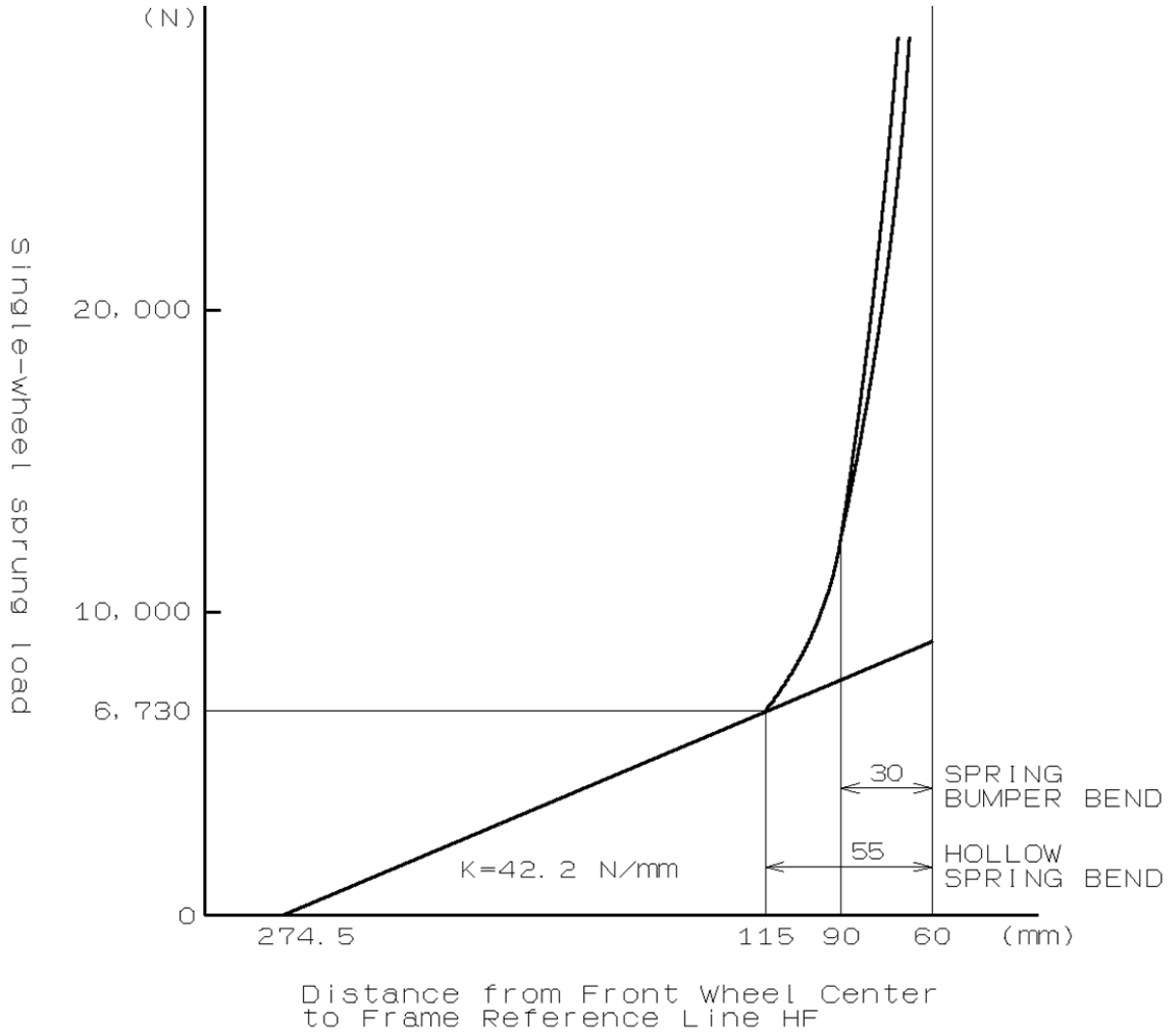

Front suspension (7/7)

Vehicle Models
· VDJ79R-DKMRYQ3

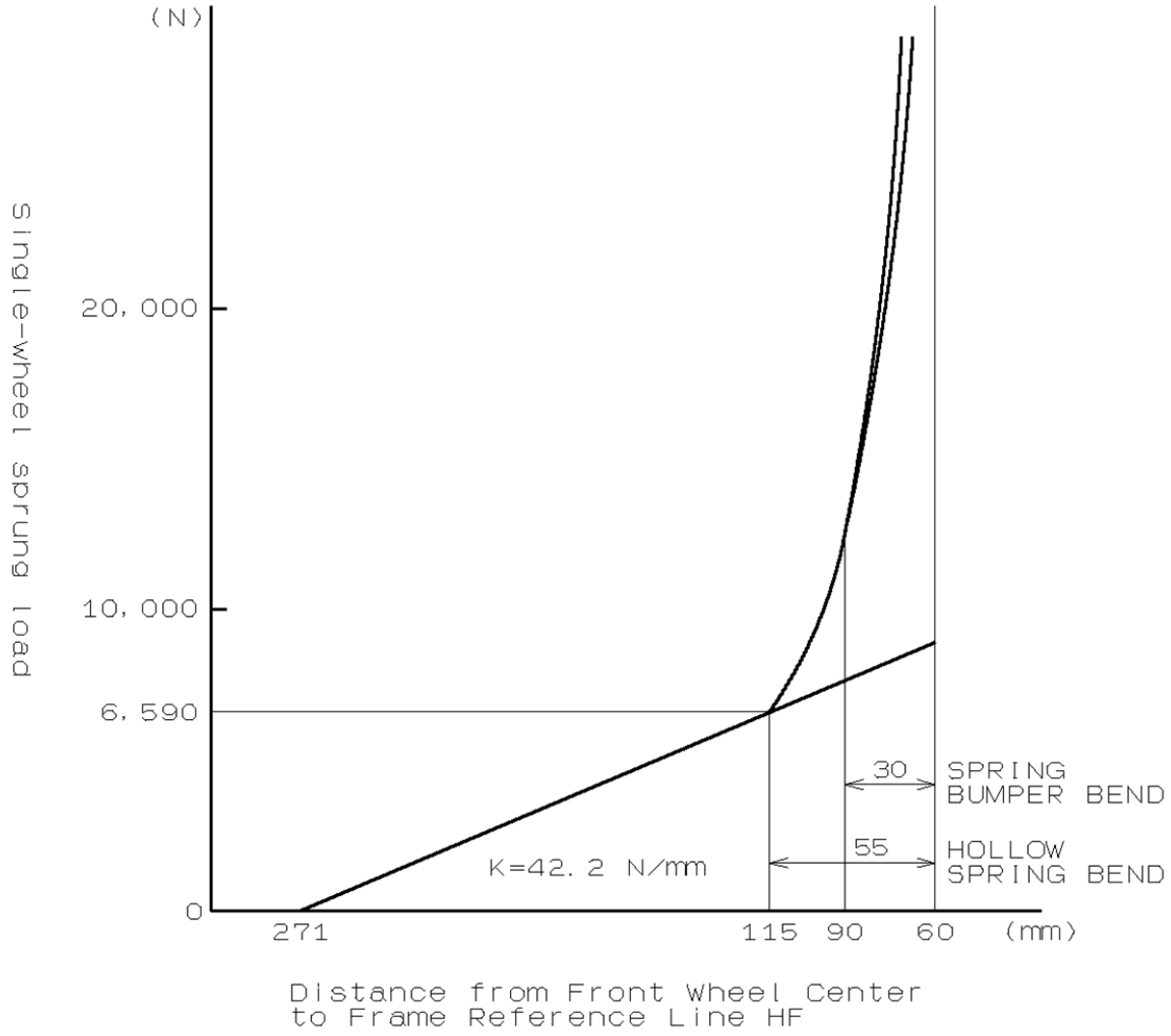

Rear suspension (1/3)

Vehicle Models
· GRJ79L-TJMRK3 · HZJ79L-TJMRS3 · VDJ79R-DKMRYQ3

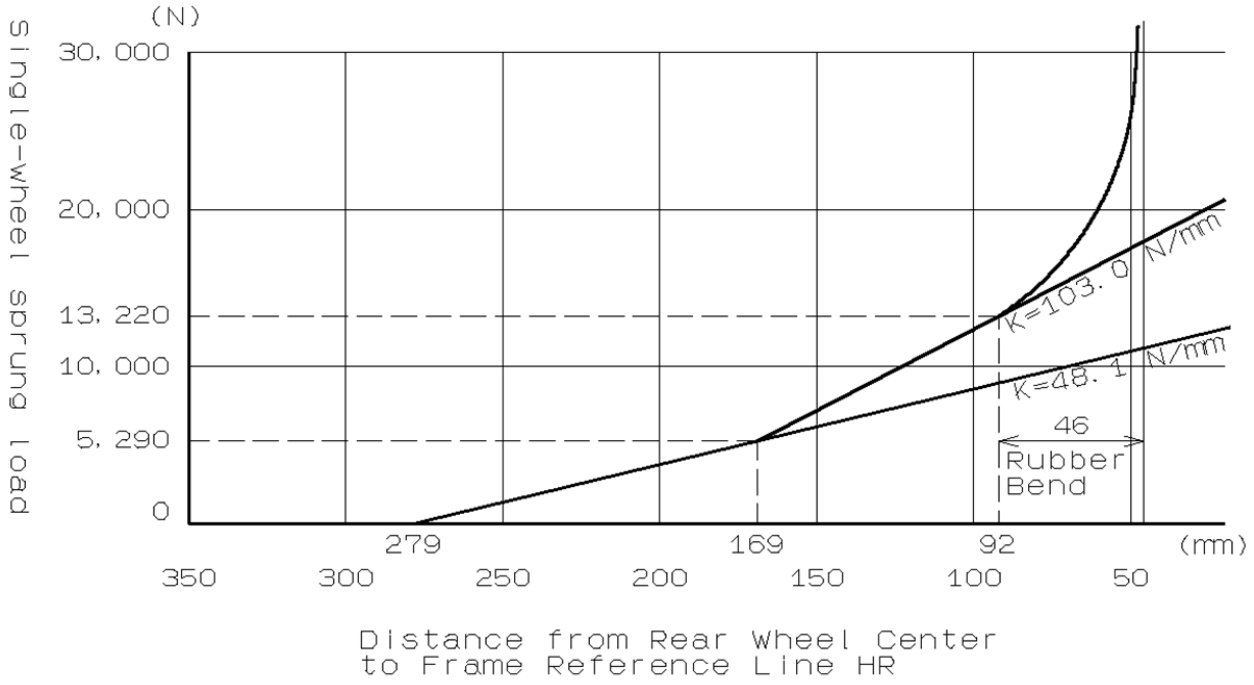

Rear suspension (2/3)

Vehicle Models
· GRJ79L-TJMRK3 · HZJ79L-TJMRS3 (Heavy Duty)

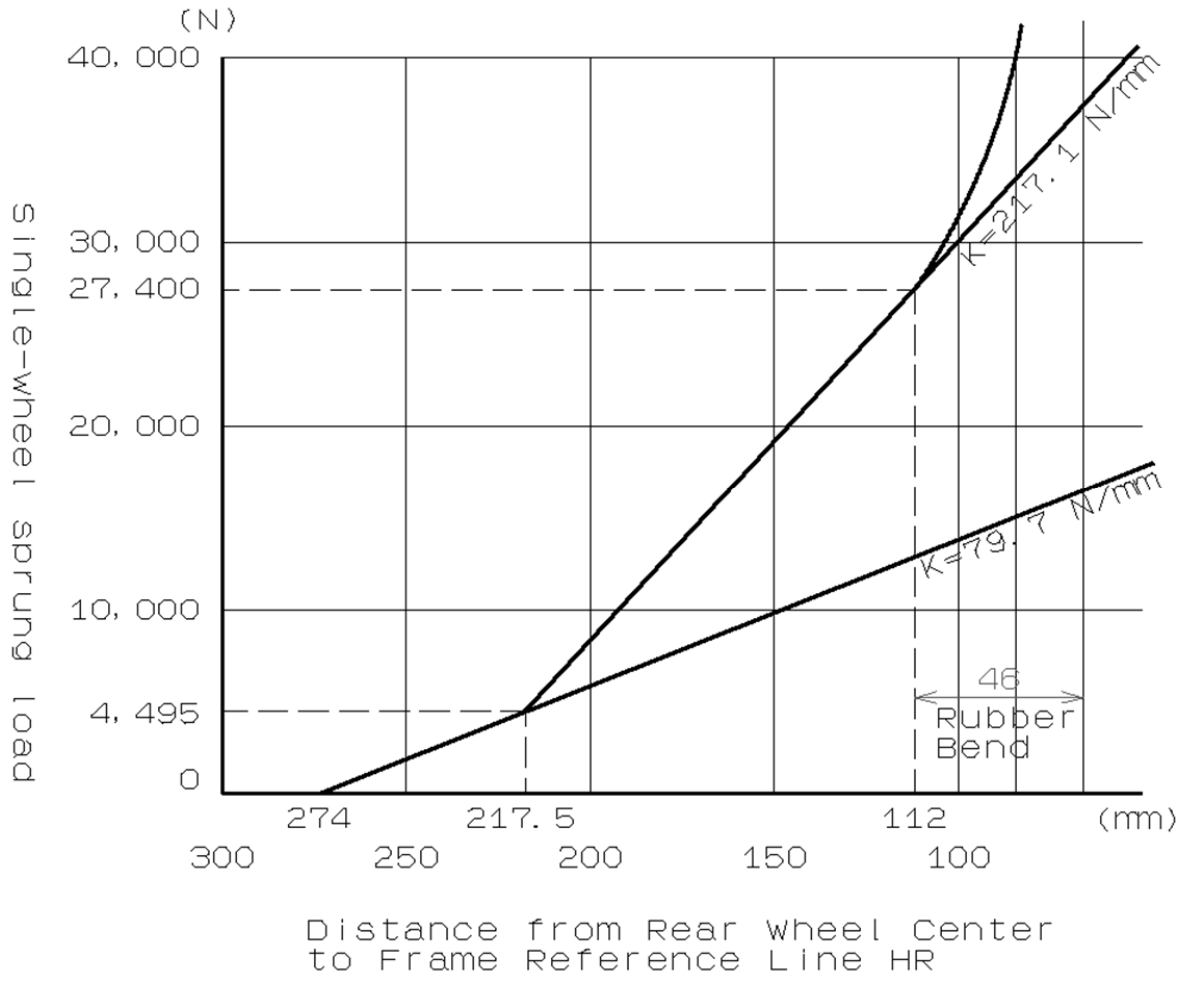

Rear suspension (3/3)

Vehicle Models
· VDJ79R-TJMRYQ3 · VDJ79R-TJMNYQ3

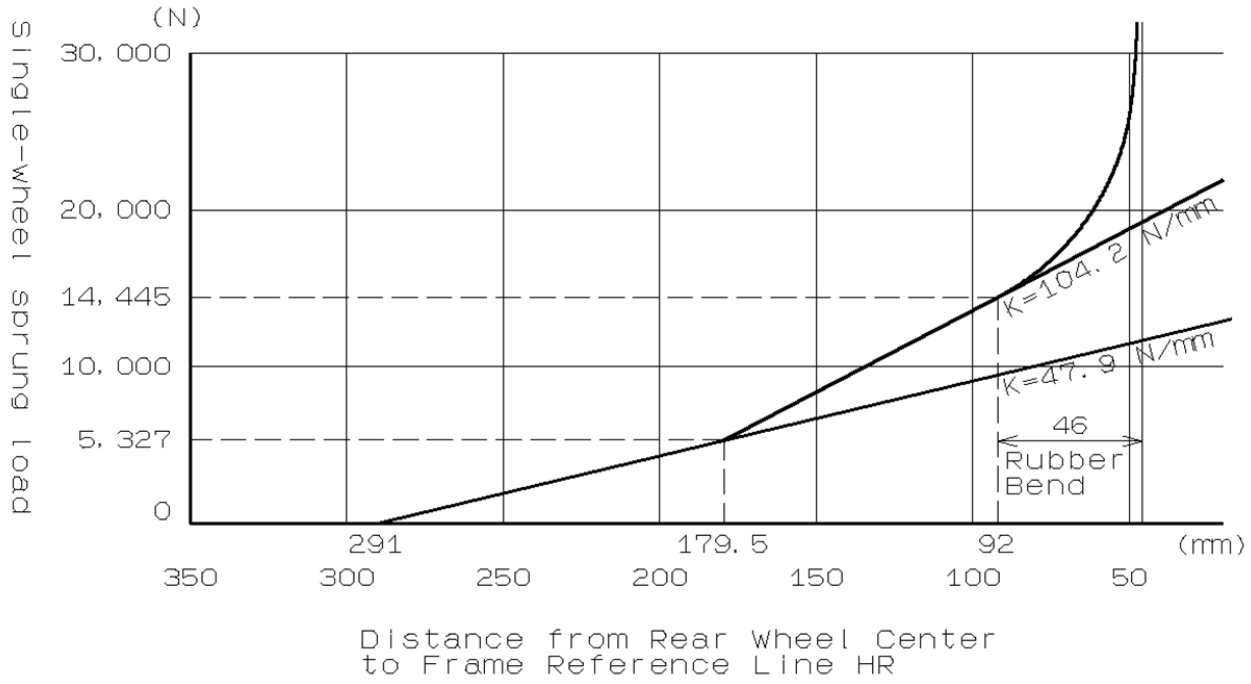

(4) Static load radius of tire

Static load radius	7.50R16LT	375 ± 7 mm	JATMA
	225/95R16C	374 mm	ETRTO
	7.50R-16C	-	
	265/70R16LT	359 ± 8mm	JATMA

(5) Tire load table

JATMA (kg)

Pressure / Tire size	kPa	300	325	350	375	400	425	450	475	500
	kgf/cm^2	3.00	3.25	3.50	3.75	4.00	4.25	4.50	4.75	5.00
7.50R16LT		880	925	965	1010	1050	1090	1135	1175 (8PR)	1215

Pressure / Tire size	kPa	525	550	575	600	625	650	675	700
	kgf/cm^2	5.25	5.50	5.75	6.00	6.25	6.50	6.75	7.00
7.50R16LT		1255	1290	1330 (10PR)	1365	1400	1440 (12PR)	1475	1510 (14PR)

ETRTO (kg)

Pressure / Tire size	kPa	200	220	240	260	280	300	325	350	375
	kgf/cm^2	2.00	2.20	2.40	2.60	2.80	3.00	3.25	3.50	3.75
225/95R16C		660	710	760	815	865	915	975	1035	1095

Pressure / Tire size	kPa	400	425	450	475
	kgf/cm^2	4.00	4.25	4.50	4.75
225/95R16C		1150	1210	1265	1320

ETRTO (kg)

Pressure / Tire size	kPa	180	200	220	240	260	280	300	325	350	375
	kgf/cm^2	1.80	2.00	2.20	2.40	2.60	2.80	3.00	3.25	3.50	3.75
7.50R-16C		538	585	632	677	722	766	810	863	916	968

Pressure / Tire size	kPa	400	425	450
	kgf/cm^2	4.00	4.25	4.50
7.50R-16C		1019	1070	1120

JATMA (kg)

Pressure / Tire size	kPa	180	200	220	240	260	280	300	325	350
	kgf/cm^2	1.80	2.00	2.20	2.40	2.60	2.80	3.00	3.25	3.50
265/70R16LT		825	875	925	975	1020	1065	1110	1165	1215

Note : The tire specifications are not variables with Auto Locking Hub(ALH) application or not.

4. Body

· In order to prevent intrusion of exhaust gas into the cab, surely seal all the holes and apertures in the cab including the floor.
· Don't remove the heat insulator from the base vehicle.

[1] Building and alterations to rear body and deck

(1) Prevention of cargo drop

Each customer (driver) is responsible for preventing his/her cargo from falling. The body-builder therefore is required to take a measure for cargo - fall prevention most suitable for the normal cargo of the particular customer.

① Since the cargo can be bound only laterally, the front portion of the deck is effectively covered with a wire mesh or iron sheets

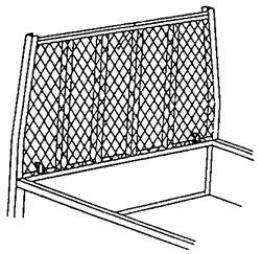

② In the case of vehicles for carrying long or heavy objects, take adequate care in reinforcing the guard frame and the connection between the guard frame and the floor

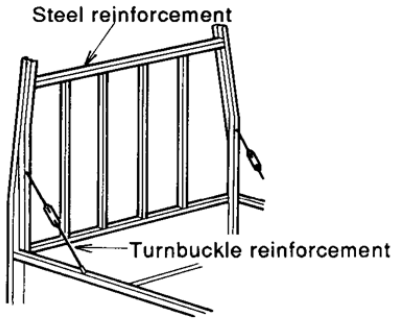

(2) Clearance between cab back and alteration (rear body, deck, etc.)

· Single Cab

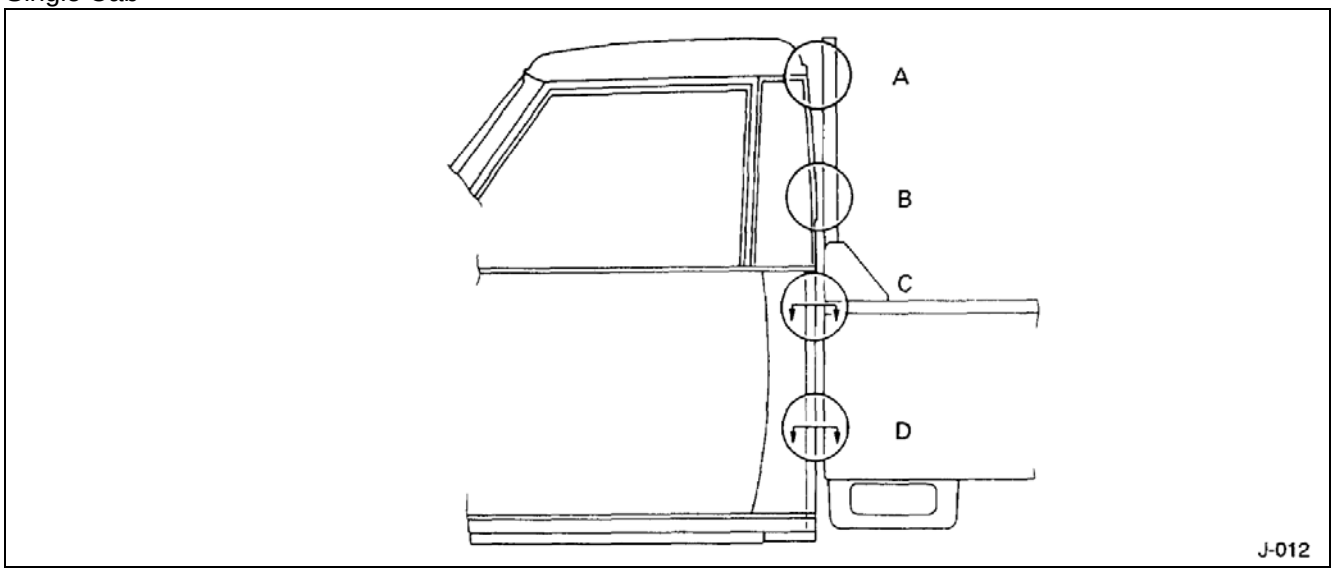

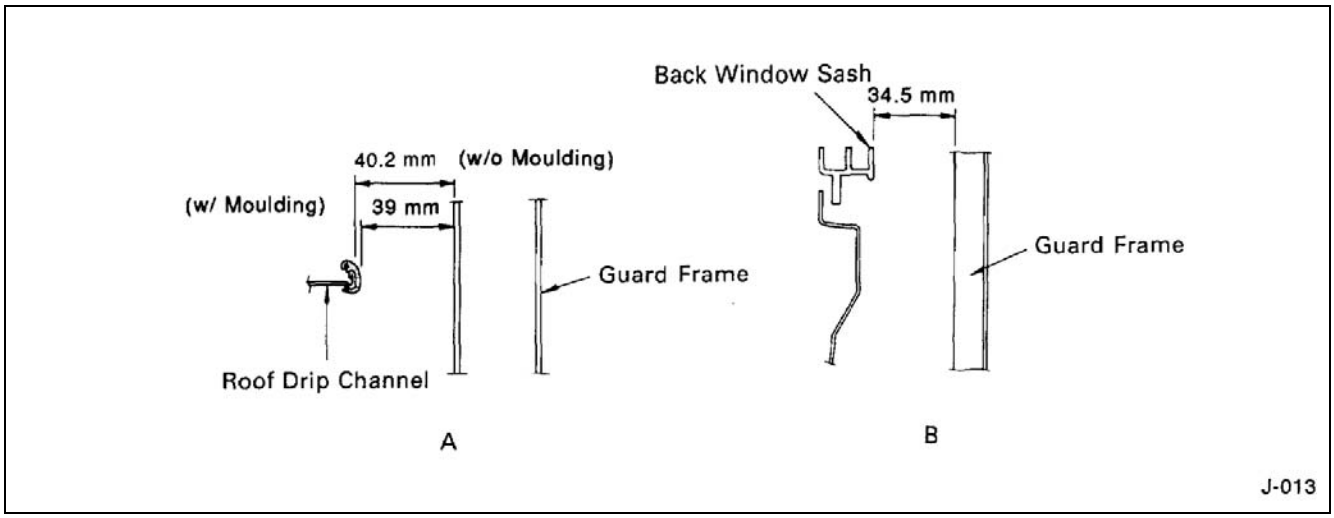

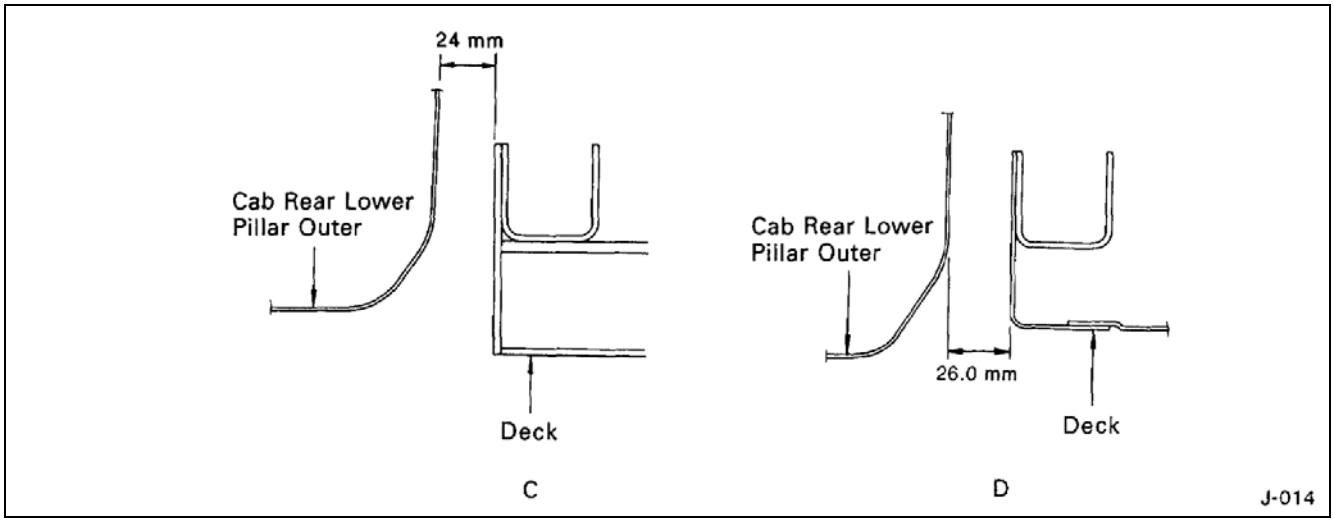

· Double Cab

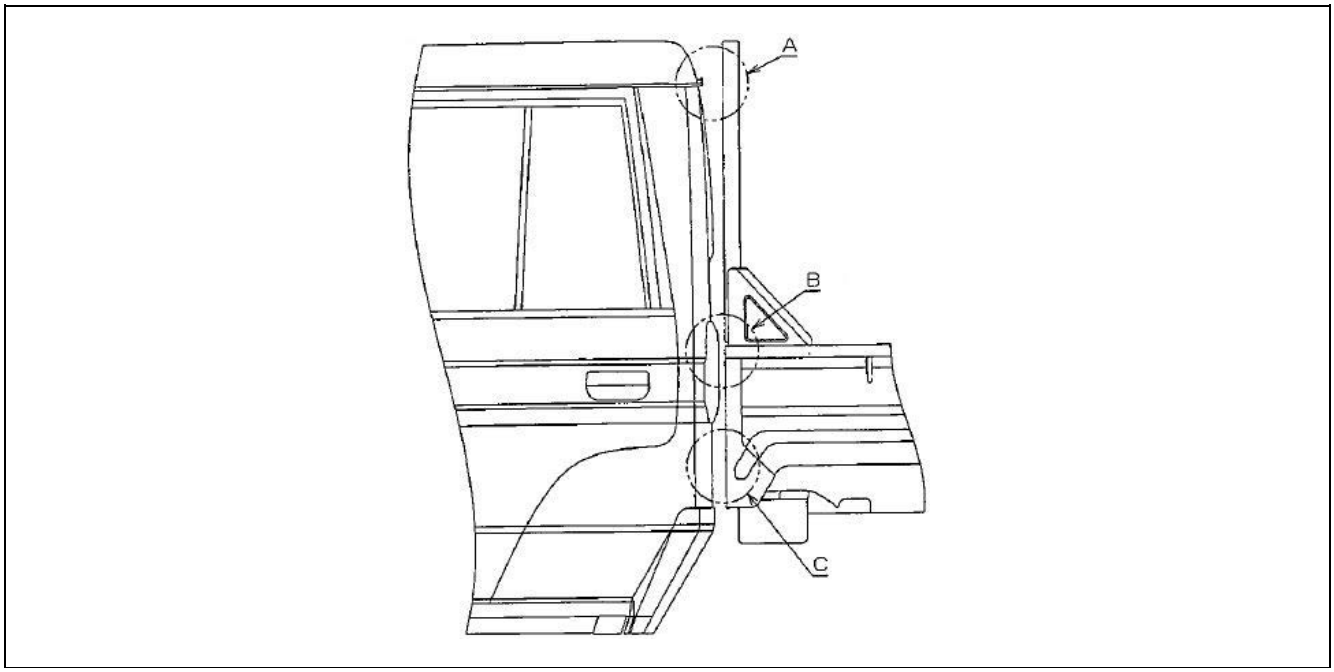

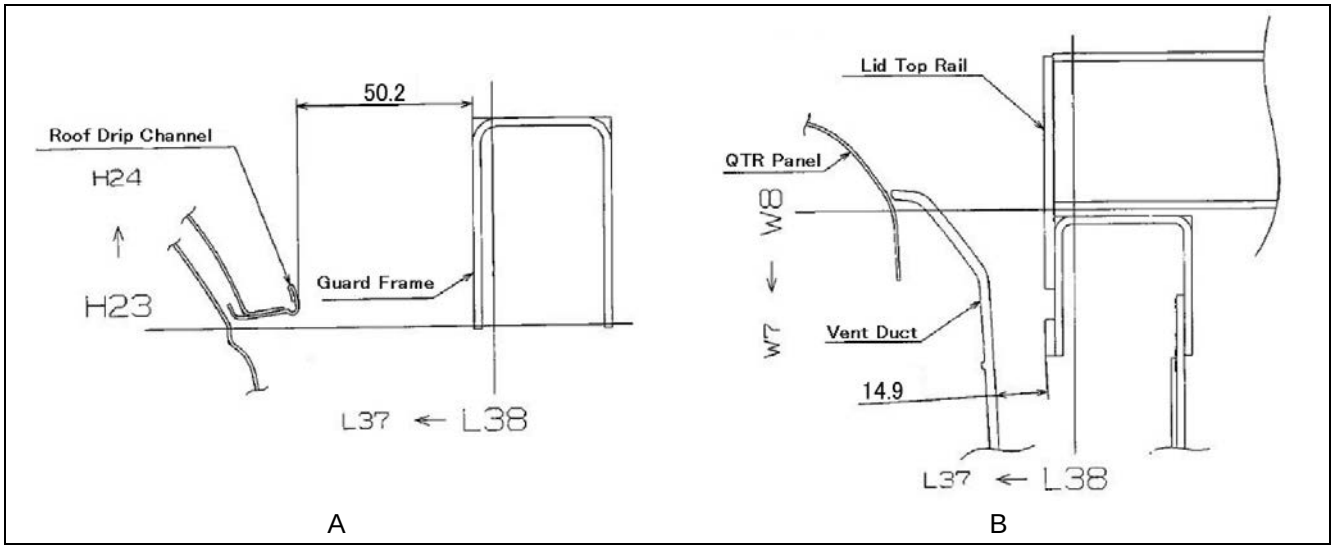

A B

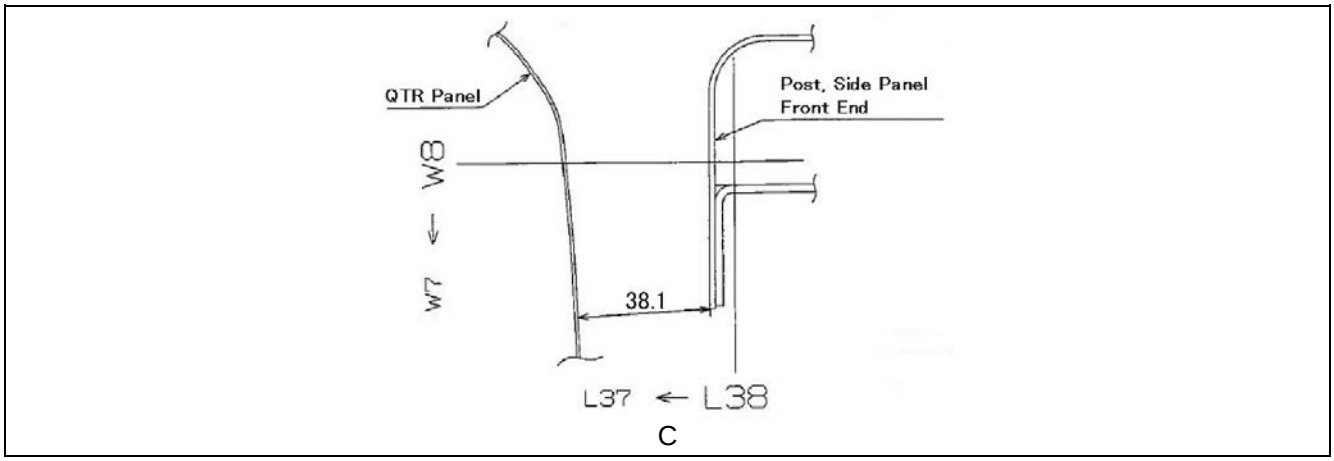

C

Make sure to secure a sufficient clearance between the cab deck and alteration.

[2] Securing rear wheel house space

Make sure to secure a required space for the wheel house.

Vertical	Bound limit of tire	+25mm
Horizontal	Outer surface of tire	+30mm
	inner surface of tire	+40mm

In attaching the tire chain, secure a larger clearance.

[3] Protection against thermal effect of exhaust system

With a sufficient clearance secured between the exhaust-related parts and the built or altered parts, measure the temperature as required to see that there is no safety problem.

Thermal effect of exhaust system

Required clearance		Related parts
Exhaust pipe	Muffler	
50mm	150mm	Mud guard (rear), heater hose
100mm	200mm	Mud guard (front)

· In cases where the above clearance can not be satisfied, protection against the heat such as a heat insulating plate is required.

5. Brake

The brake system and piping must not be modified.

[1] Readjustment of LSPV

A load sensing proportioning valve (LSPV) is mounted on the base vehicle for stabilizing the brake performance in accordance with the change of load.

· Adjust LSPV after building or alteration (on completion of the vehicle).
· Readjustment of a LSPV demounted is always necessary.

(1) LSPV readjustment procedure

① SST, tools and measuring instruments

SST	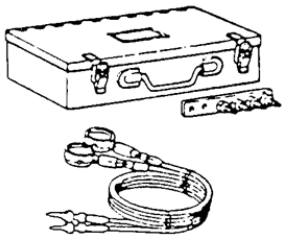 J-017	09709-29018	Gage set, LSPV
Instrument	Axle load gage		

② Preparation for adjustment

(a) Measure the rear axle load using the axle load gage.

Standard rear axle load for adjustment

Classification	Standard rear axle load for adjustment (N)
GRJ79, HZJ79	14701

< Procedure >

With one person in driver's seat, place a weight on the vehicle to adjust the rear axle load.

· When adjusting the rear axle load, set the weight to a value higher than the expected load by about 588 N. Reduce the weight slowly for final adjustment.

· See to it that there is no lateral imbalance.

(b) Mounting the LSPV gage set, bleed air from the gage.

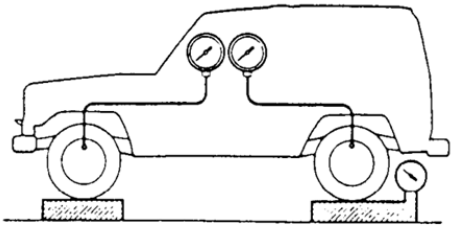
J-018

③ Measurement of hydraulic pressure

(a) Depress the brake pedal until the oil pressure in the front wheel cylinder reaches 5.9 Mpa, 7.8 Mpa.

· Don't depress the brake pedal a number of times.
· When the oil pressure in the front wheel cylinder exceeds 5.9 Mpa, 7.8 Mpa, release the pedal completely and then depress it again

(b) After holding the oil pressure in the front wheel cylinder at (5.9 Mpa, 7.8 Mpa) for two seconds, measure the oil pressure in the rear wheel cylinder.

Standard rear liquid pressure

Adjusted Standard Front liquid Pressure	Rear liquid Pressure
5.9 Mpa	4.9 ± 0.5 Mpa
7.8 Mpa	5.4 ± 0.7 Mpa

④ How to determine standard oil pressure in rear wheel cylinder

Only in the case where the rear axle load can not be adjusted to a value shown as the standard axle load, adjust the oil pressure in the rear wheel cylinder using the diagram shown below.

(a) Plotting the rear axle load along the abscissa of a static oil pressure curve bend point diagram, determine a bend point of oil pressure.

Ex: For the rear axle load of 14701 N, the oil pressure bend point is 4.5 Mpa

See (3) Static oil pressure curve bend point diagram

(b) After the value for the bend point of oil pressure is determined, plot the performance line (a line parallel to the valve unit performance line extending from the bend point of oil pressure), and read the rear wheel cylinder oil pressure at the time when the front wheel cylinder pressure is at 5.9 Mpa, 7.8 Mpa.

.

Ex: In the case where the bend point of oil pressure stands at 4.5 Mpa the standard value for rear wheel cylinder oil pressure becomes 4.9 Mpa, 5.4 Mpa at the time when the front wheel cylinder pressure is at 5.9 Mpa, 7.8 Mpa.

LSPV performance curve diagram

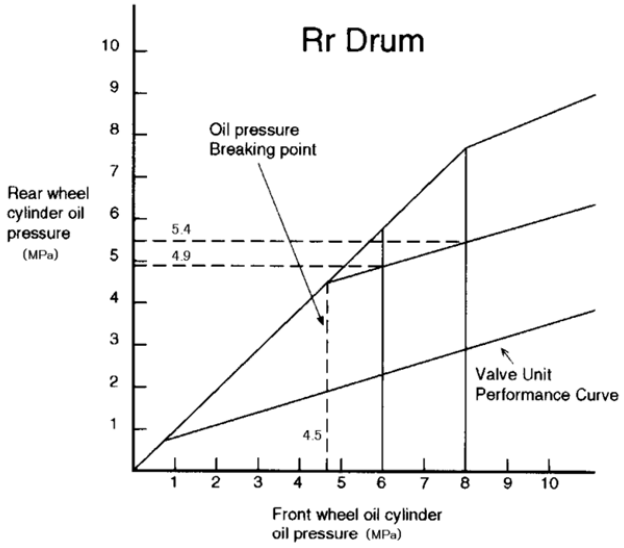

How to calculate standard oil pressure

When the break point (x) is known, the oil pressure in the rear wheel cylinder against that in the front wheel oil cylinder is determined by the following equation:

Ex : Rear wheel cylinder oil pressure for front axle load of 5.9 Mpa
$= x + (5.9 - x) \times 0.25$ Rr Drum

Rear wheel cylinder oil pressure for front axle load of 7.8 Mpa
$= x + (7.8 - x) \times 0.25$ Rr Drum

⑤ Oil pressure adjustment

If the oil pressure measurement fails to satisfy the standard value, adjust the oil pressure as follows.

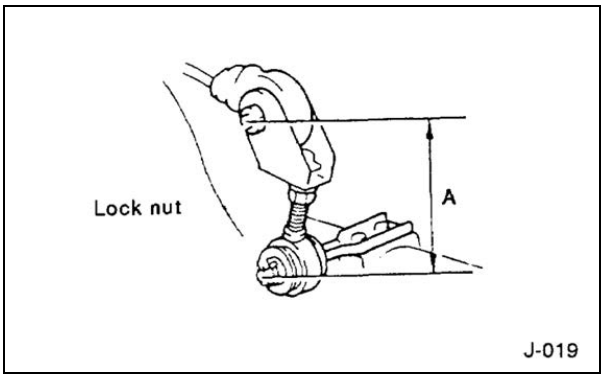

(a) Adjust the length of shackle No.2 (Dimension A).

When the oil pressure is low,
increase the Dimension A.
(Turn the shackle counterclockwise.)

When the oil pressure is high,
decrease the Dimension A.
(Turn the shackle clockwise.)

Standard Dimension A	78 mm
Adjustment range	72 mm ~ 84 mm

· Lock nut fastening torque T = 24.5 N·m

Oil pressure change adjusted per lock nut rotation

Vehicle type	Change (per rotation)
AII Models	Rr Drum : 0.14 Mpa

(b) Adjustment with LSPV body

When adjustment is impossible with the length of shackle No.2, move the LSPV body vertically to attain the standard oil pressure.

When oil pressure is low, lower the LSPV body.

When oil pressure is high, raise the LSPV body.

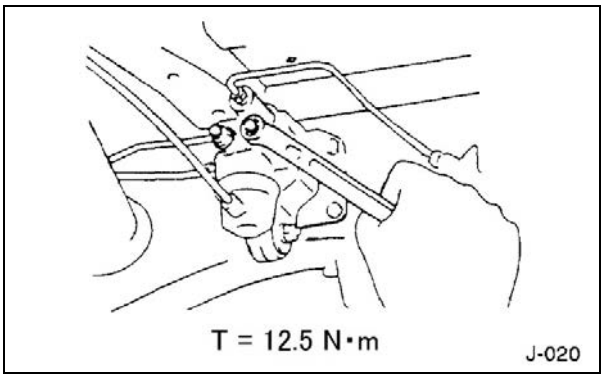

· Set nut fastening torque T = 12.5 N·m

· After adjusting with LSPV body, readjust the length (Dimension A) of the shackle No.2.

(2) LSPV performance curve diagram

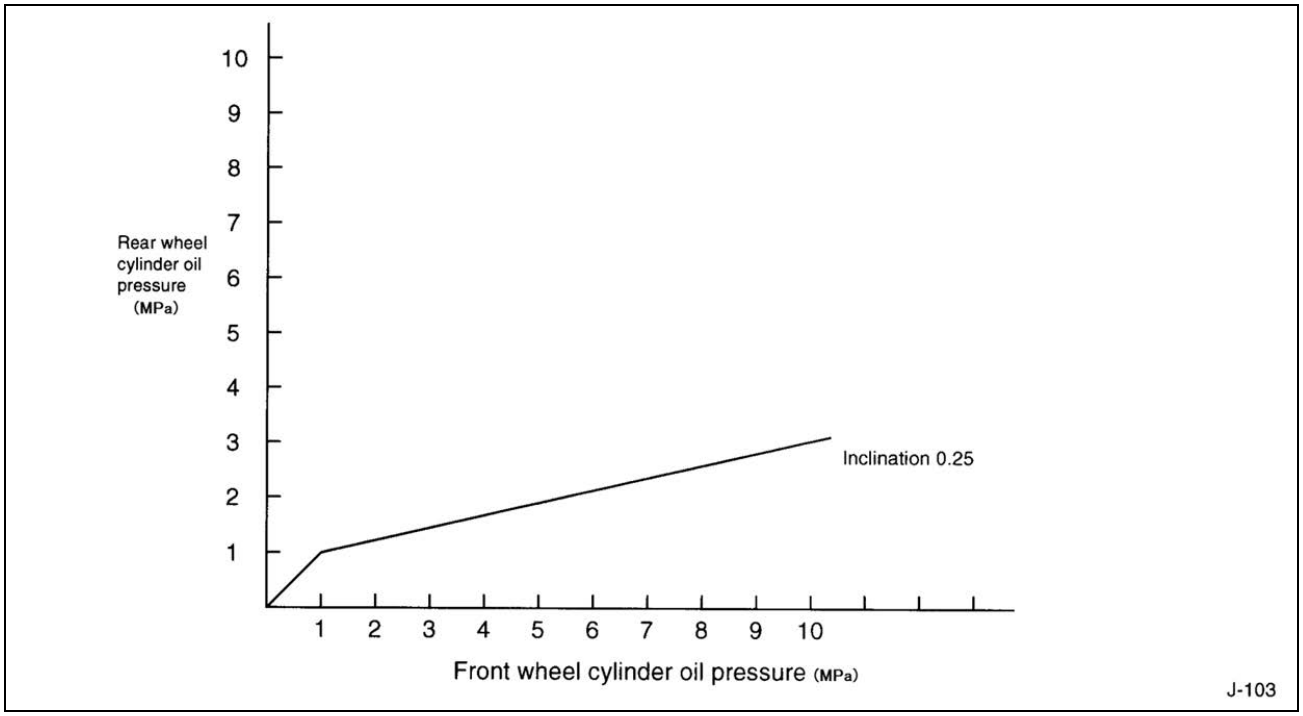

(3) Static oil pressure curve bend point diagram

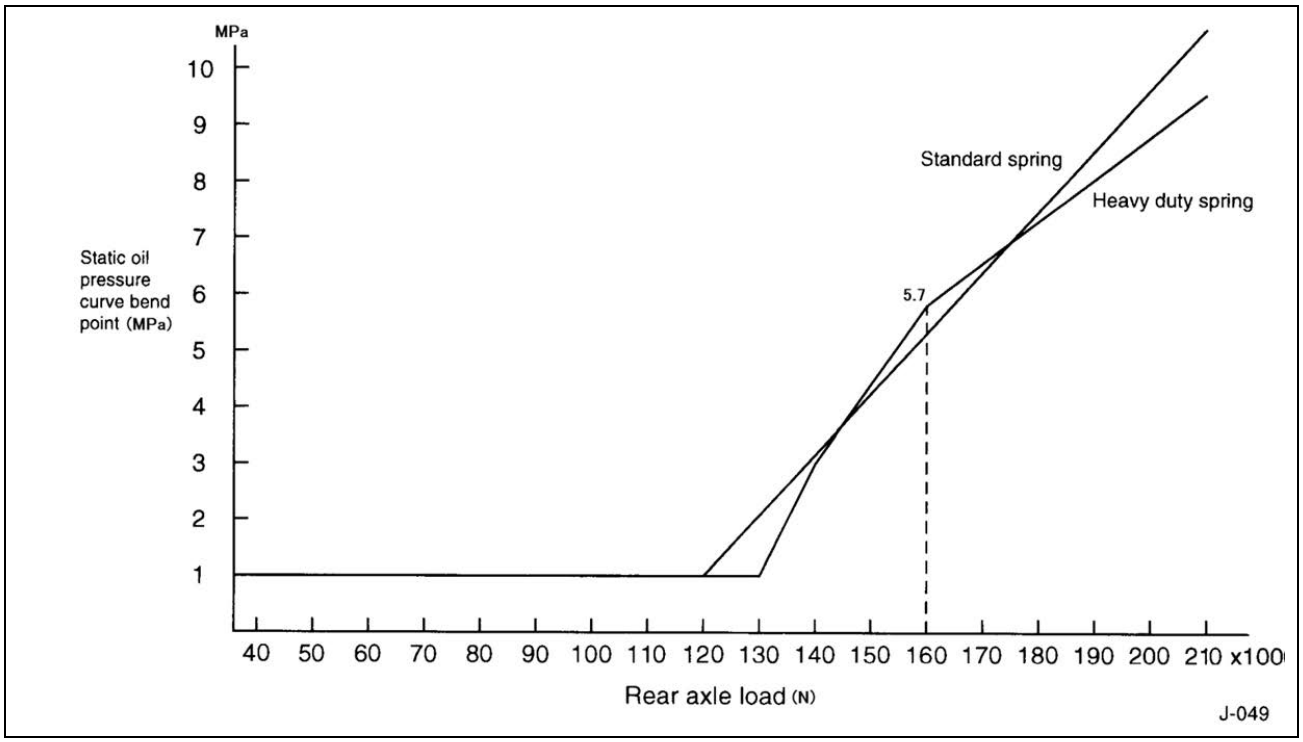

6. Drive units

[1] Transmission

① Sufficient clearance should be provided between transmission and an altered part because the two parts move relatively.

② It is necessary to shift transmission rearward to pull out the clutch spline shaft when removing and reinstalling clutch and transmission. Therefore, don't locate any attachment and equipment in the area within 130mm behind the transmission.

③ For the breather tube installed on transmission, strictly observe the following points.

· Never alter the position of the breather tube.
· Never collapse nor break the breather tube.
· Never plug the opening of the breather tube.

[2] Propeller shaft

① Provide clearance of at least 25mm between propeller shaft and any altered parts taking account of the full bound movement of the propeller shaft.

7. Exhaust pipe

The thermal effect and interference of the exhaust-related parts including the exhaust pipe and the muffler poses a very serious safety problem. Strictly comply with the following instructions.

· Don't change the structure of exhaust system and the muffler capacity.

· Secure a sufficient clearance between the exhaust-related parts and the building or alteration (refer to respective instructions for each device). Measure the temperature as required and make sure that there is no safety problem. In cases where the above clearance can not be satisfied, protection against the heat such as a heat insulating plate is required.

8. Battery

The battery is an item which, if handled inappropriately, may cause a malfunction of the electrical components of the vehicle or an engine trouble or a fire. Strictly observe the instructions on the battery and battery cable.

[1] Wiring precautions

① In order to prevent damage from water or other objects, protect the battery appropriately.

② The battery cable, whether in or out of position, should not be in contact with a sharp edge of other portions.

③ Clip the battery cable at intervals of less than 450 mm. (Always use a clip lined with rubber.)

- Be sure that the clip is not freely movable.
- Keep the clips away from other portions.

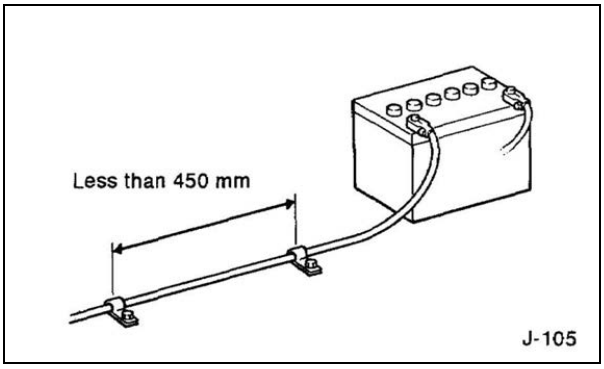

④ Don't bend the battery cable to a radius smaller than ten times the cable diameter.

⑤ If the terminal is moved under the mounting tension of the battery cable, the terminal would become loose or normal engine start would become impossible, often leading to a battery failure. Always securely fix the battery cable on the battery tray.

⑥ Set the route of the battery cable downward so that no leverage action is exerted to loosen the connector.

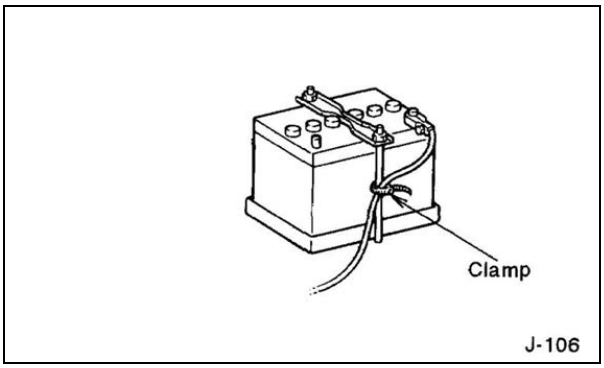

[2] Change of battery mounting position

① Install the battery at a position where the air flow is sufficient to release into the atmosphere the gas generated during the temperature increase or the charging operation.

② Keep the battery away from a heat source by 200 mm minimum. When this distance is not sufficient, protect the battery from heat using a heat insulating plate or the like.

③ Determine the battery position using the existing battery cable.

[3] No overlaid connection of battery cables

Never connect battery cables by overlaying them one on another.

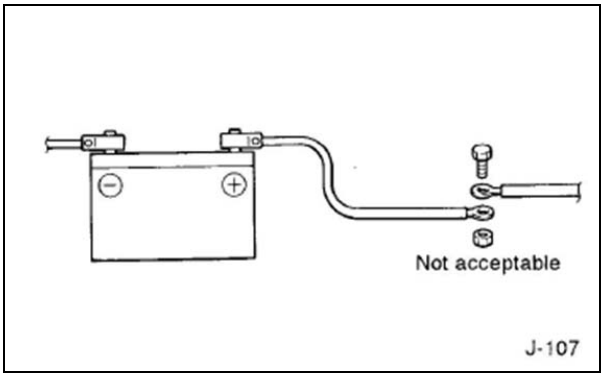

[4] Replacement battery cable

Replacing the battery cable poses an engine start problem and causes the loss of other key systems. Comply with the following instructions strictly.

① In order to secure the appropriate functions of the battery cable, use a cable with the following specifications.

Thickness (gage)	Length (mm)	Material
4	1600	Copper
2	2600	Copper
0	4200	Copper

② When a minus cable is installed on the frame as a result of battery relocation, connect a cable of substantially the same size as the plus cable between the frame and the engine to cope with a large electric load of the starting circuit.

[5] Serviceability

① During the service or check work, secure a sufficient space or insulation in order not to cause any accident such as short circuit.

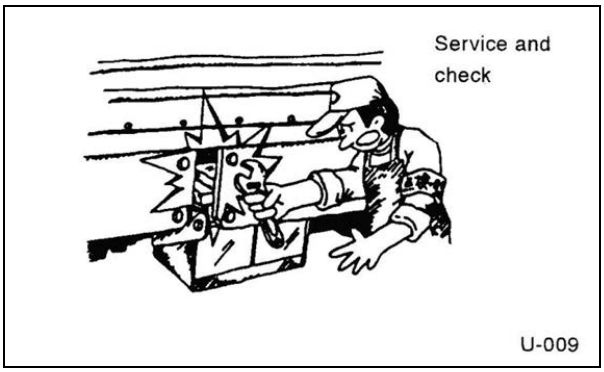

② Attach a terminal polarity marking, a caution label and a gravity meter (mark) at an easily visible position.

9. Fuel tank

[1] Addition and relocation of fuel tank

① Don't add or relocate a fuel tank.

[2] Fuel tank position (steel tank)

① Keep the fuel tank 100 mm minimum away from the exhaust pipe and 200 mm minimum away from the muffler.

· When the specified clearance can not be satisfied or if necessary for heat consideration, protect against the heat by providing a heat insulating plate or the like.

② Keep other parts with a sufficient clearance from the fuel tank, fuel pipe and fuel hose.

· Confirming the motion of the other part in question, see to it that a sufficient clearance is secured even when the particular part is moved.

[3] Serviceability

Provide means for facilitating the supplying fuel to or draining water from the fuel tank.

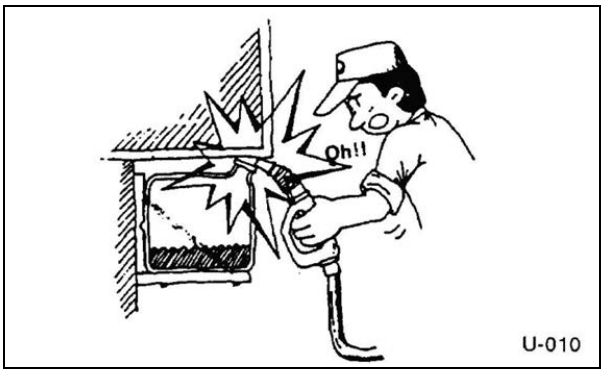

10. Spare tire carrier

In order to support the spare tire safely, take the following preventive measures when the spare tire carrier is added or modified.

[1] General preventive measures

① Construct the vehicle in such a way as to facilitate the mounting and demounting of the spare tire by a single person.

② Construct the vehicle with the spare tire not in contact with the parts other than the stopper when mounted.

③ Be sure that the chain or the like is not caught up when the tire is wound up.

④ Don't install the built or altered equipment within the operating range of the spare tire carrier handle.

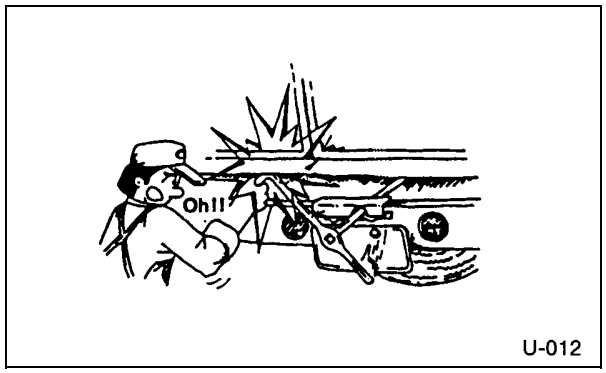

⑤ Construct the spare tire carrier in such a way that even a punctured tire can be fixed securely.

⑥ The construction should be such that the tire is stored within the outermost side of the vehicle.

⑦ Construct the spare tire carrier in such a manner that the tire is fixed at a position 100 mm minimum away from the exhaust pipe and 200 mm minimum away from the muffler.

· In cases where no sufficient clearance is available, take an appropriate measure to protect the spare tire carrier against the heat by providing a heat insulating plate or the like.

⑧ Attach the caution plate for the spare tire at a position easily visible from the operating point.

[2] Preventive measure for addition or alteration to spare tire carrier of wind-up type

(1) How to support tires

① In order to ensure that the spare tire carrier produces a tightening reaction force even in case a punctured tire is stored, construct the spare tire carrier in such a manner that the tire rim can surely rests on the support.

② When a cushion is used, securely fix it on the support.

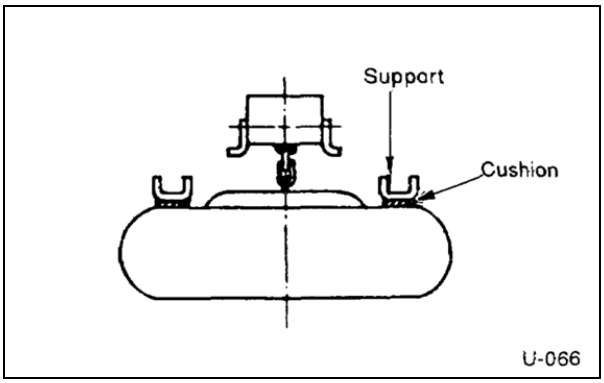

(2) Height of guide

To facilitate the raising of plate platform, make the guide have a height exceeding 10 mm.

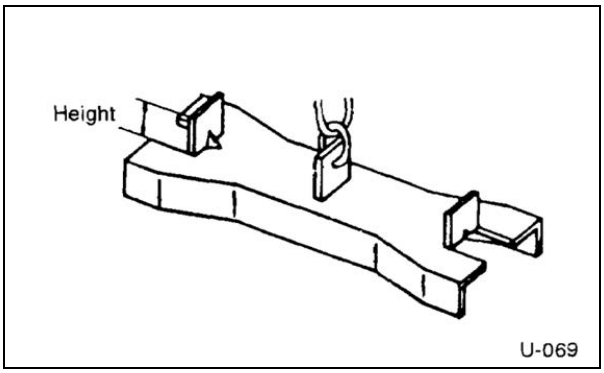

(3) Torque for tightening a tire

Tighten the tire with a standard tightening torque of 45.3 N·m or more. Tighten the handle with a force of 25 kg or more

(4) Tension load

At the stage of building the body, apply a tension load of 500kg minimum to the chain.

(5) Caution plate

In order to make the operator observe the torque as specified, attach the caution plate showing the recommended tightening torque at the position that can be seen from the operating position.

[3] Mounting position

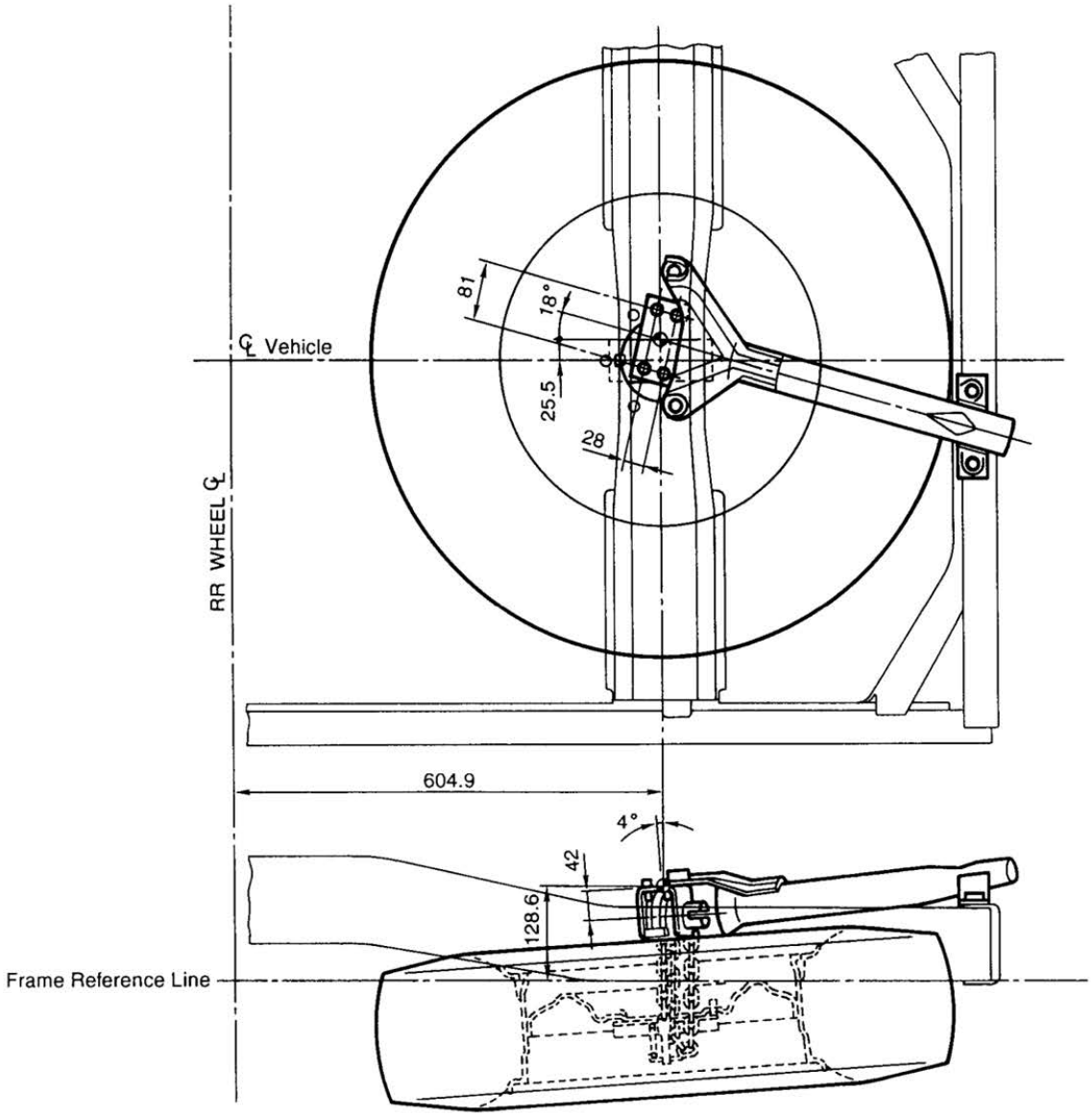

J-108

[4] Spare tire carrier handle

(1) Rod

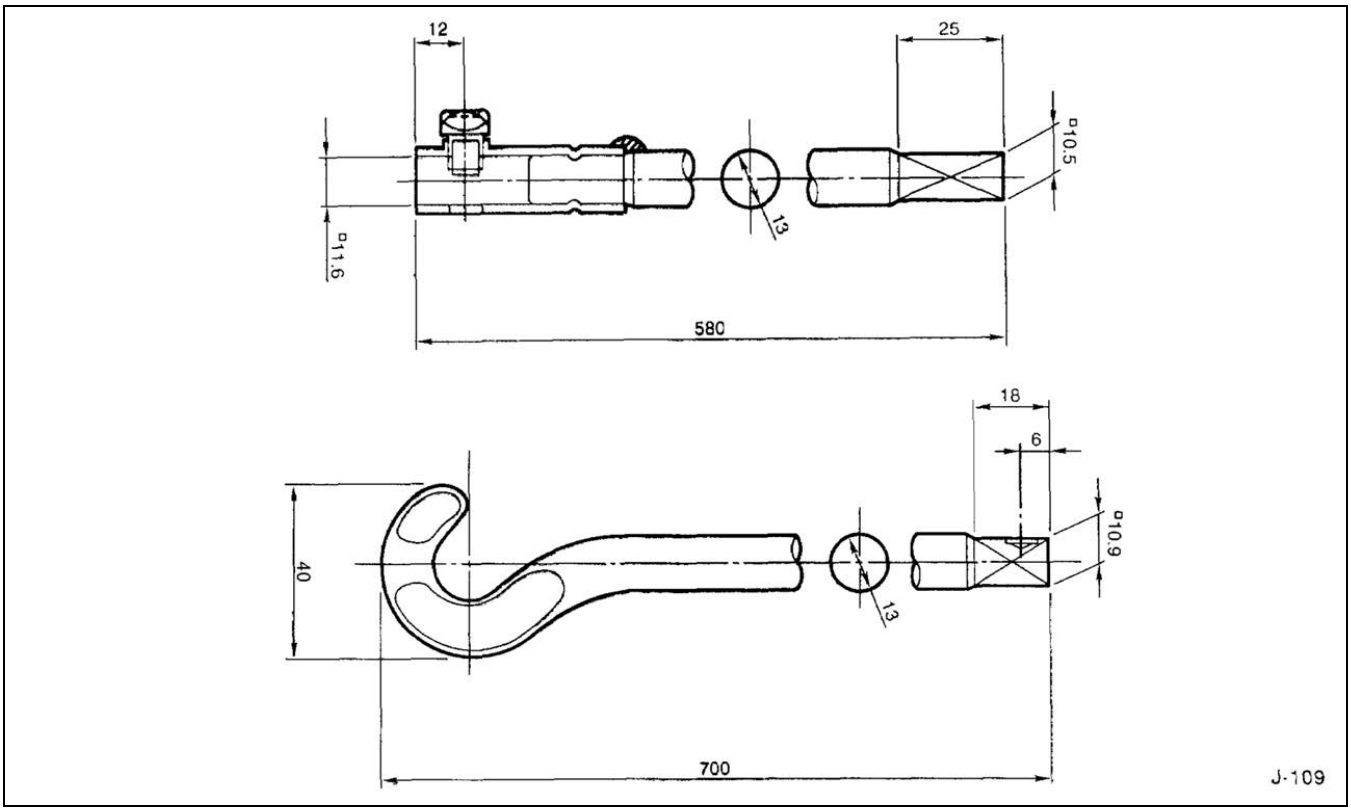

(2) Handle

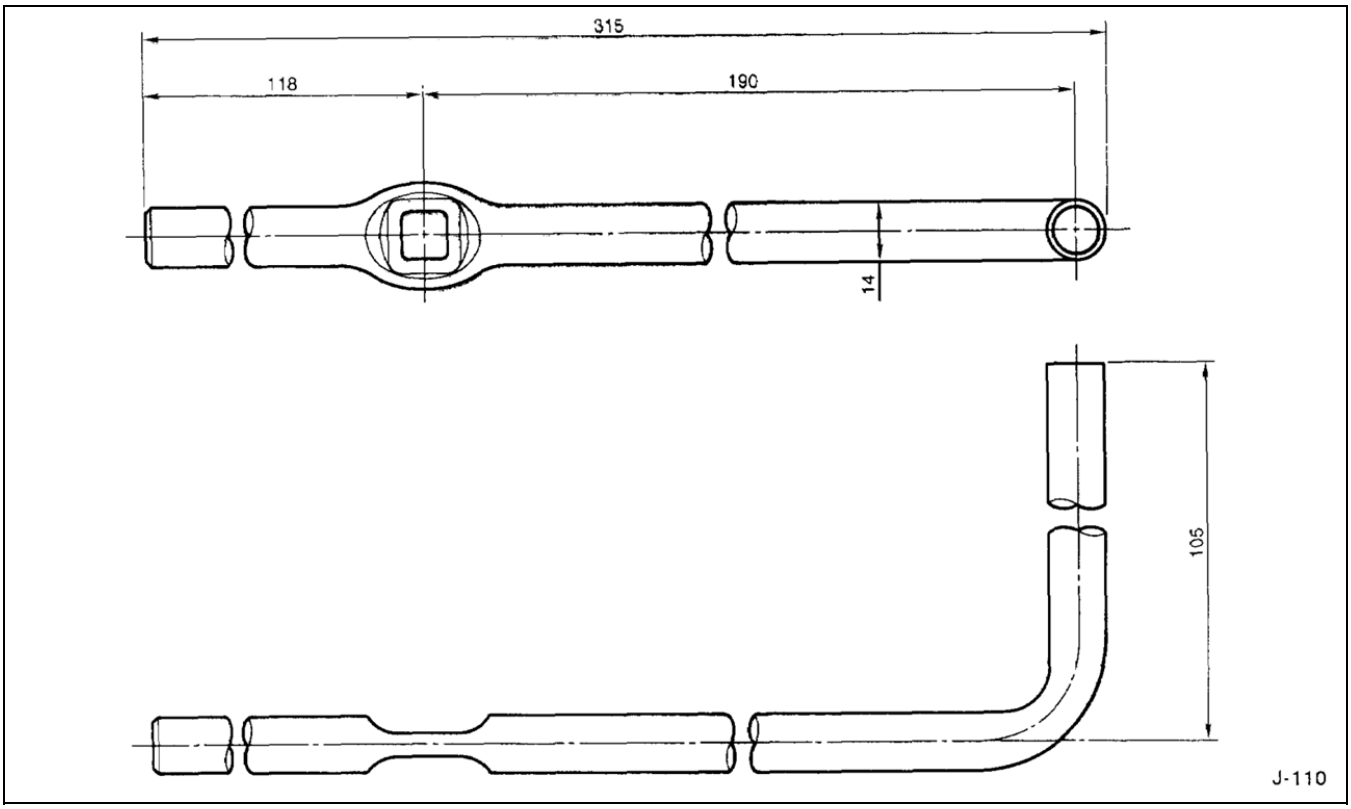

(3) Handle guide hole

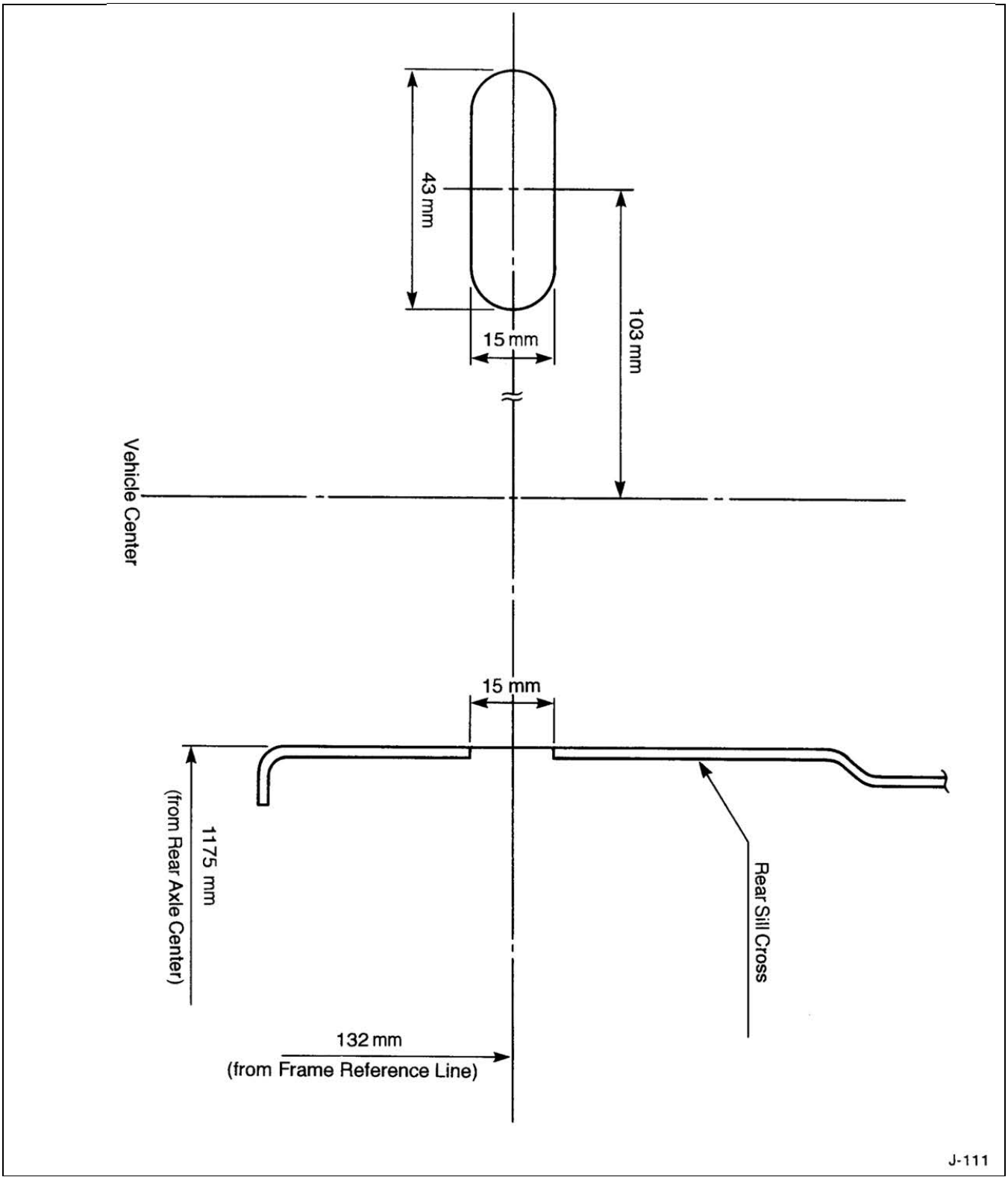

11. Electrical wirings

The electrical wirings of the vehicle are specified taking the operating load and the operating frequency into consideration. When adding wirings for body-building or alterations, make sure that there is no safety problem.

[1] Consideration of existing vehicle wirings

(1) Interference

① Be sure that no wiring is caught between other parts.

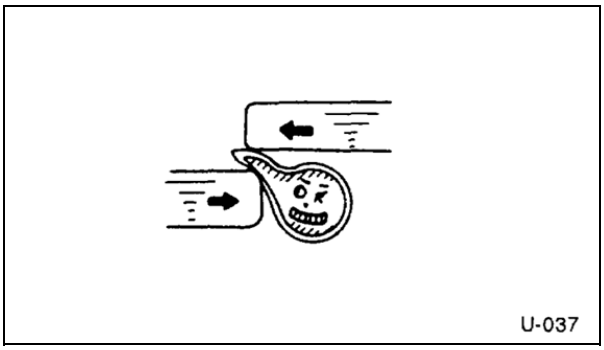

② Take care that the wiring is not flattened.

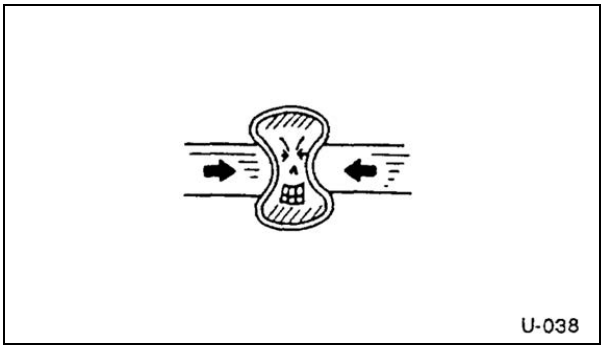

③ See to it that the wiring is not in contact with a sharp object.

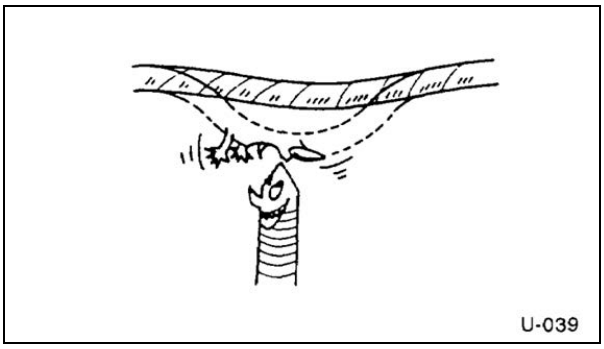

(2) Wiring arrangement

Don't pull the wiring forcibly.

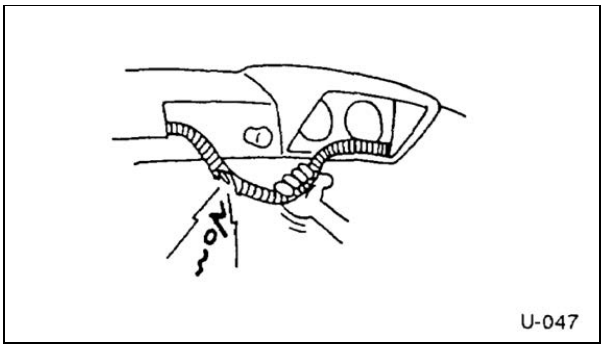

(3) Mounting and demounting the connector

When removing the connector, don't pull the wire harness but by holding the connector body.

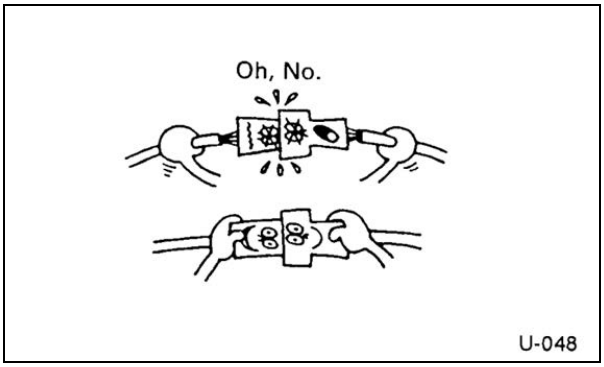

(4) Heat consideration

① Secure an adequate clearance with the high-temperature parts.

② Measure the temperature whenever required to eliminate the safety problems.

· Don't lay the wiring in the vicinity of the exhaust pipe or muffler or where the wiring is exposed directly to the exhaust gas.

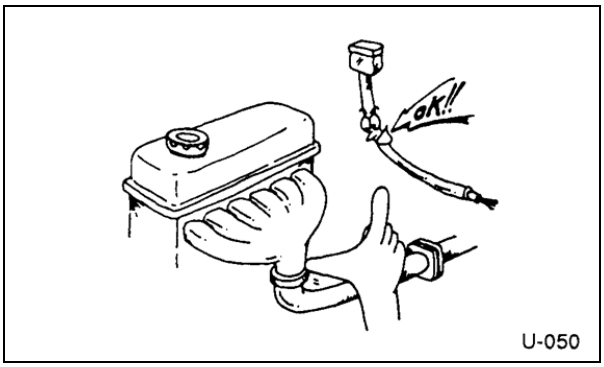

(5) Serviceability

Make sure that the inspection and maintenance work on the wirings and electrical equipment can be conducted easily after the particular building or alterations.

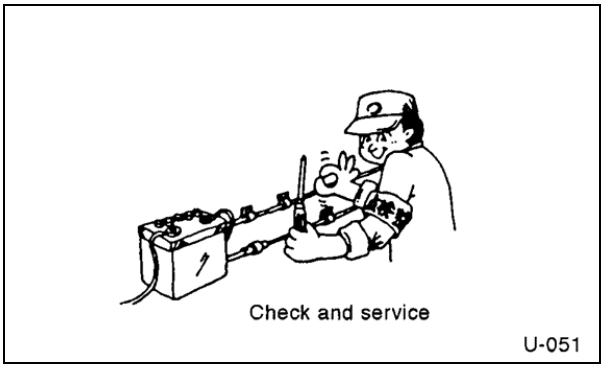

(6) Mounting additional buzzer

When mounting a buzzer or the like on the alterations, always be sure that the sound of the buzzer is different from and does not double as that of any of the existing buzzers.

[2] Wiring addition

(1) Wire harness

① When extending the wiring, use the low-voltage wiring for vehicles specified according to JIS or JASO.

(Reference)
Features of low-voltage wirings for vehicles

· The copper wire is wound with soft vinyl coating

· Somewhat thinner than common electrical wirings for low-voltage applications.

· Very easy to bend.

② When extending the wiring, use the extension having the same sectional area and the same color as the existing one.

· Don't extend the wiring in a corrugated tube

③ Apply a cover of vinyl chloride tube or corrugated tube on the additional wiring in principle.

(2) Connection

Secure connection by means of a pressure-fit terminal or by brazing with a sufficient insulating covering

(3) Wiring arrangement

① Securely clamp the wiring with an appropriate clearance so that the wiring does not sag coming into contact with other parts.

· The wiring should be arranged along a frame or a body member. Never clamp or tape it together with the fuel pipe or the brake pipe.

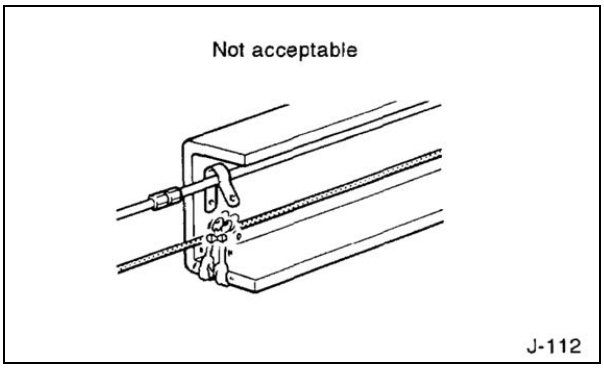

· Use a clamp made of rubber or coated with vinyl.

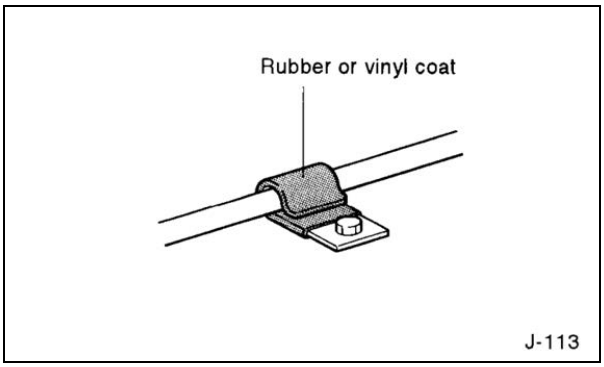

· Secure the inter-clamp interval of about 200 mm.

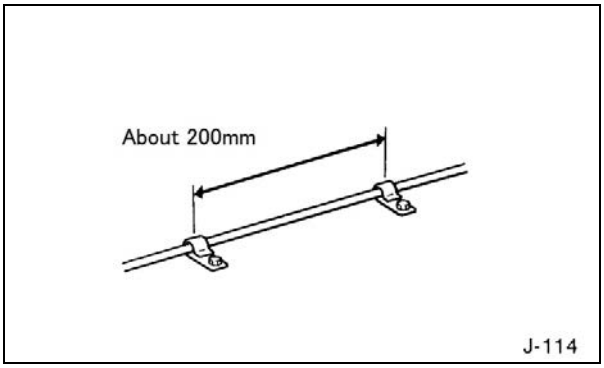

· Secure a sufficient clearance between the wiring and moving parts or a sharp object.

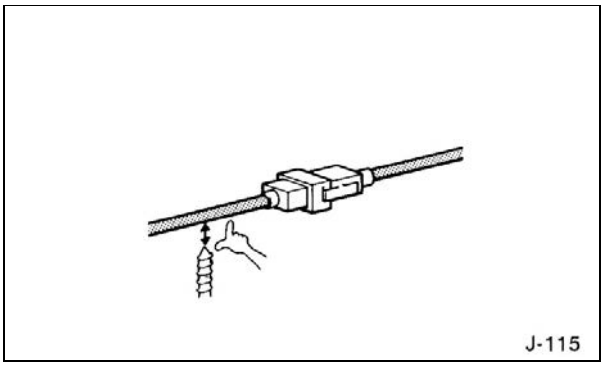

② Always use a connector with lock. Don't use a plug-type connector as far as possible. If the use of a plug-type connector is unavoidable, set the female side as the positive power supply (+) in order for the connector not to come off and cause short circuit.

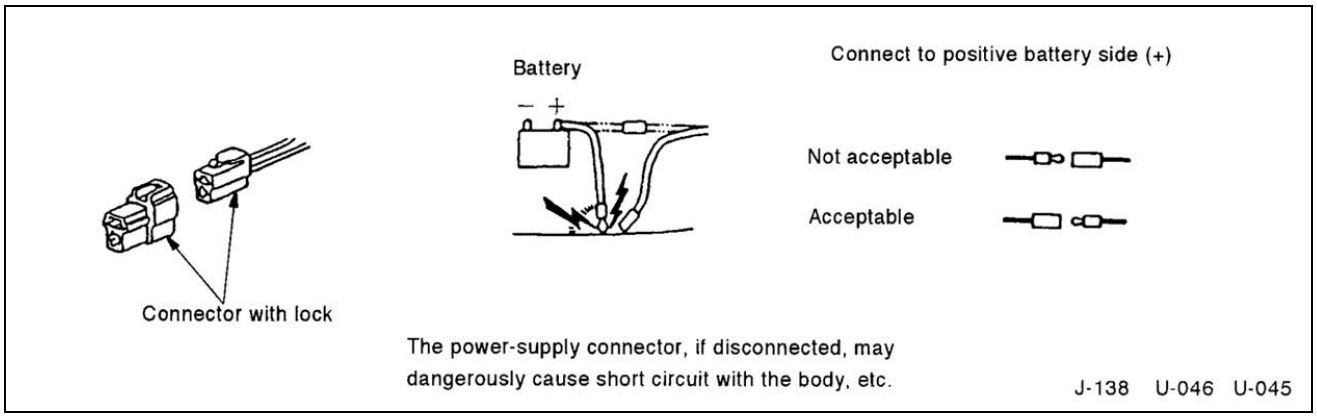

③ When mounting an additional electrical part, always attach a fusible link and the earth.

(4) Protection against water and dust

① Install the wiring at a (upper) position where the wiring is not likely to be damaged by water, dust, mud or snow pile, freezing or flying stones, or where it is not buried under dust or sand.

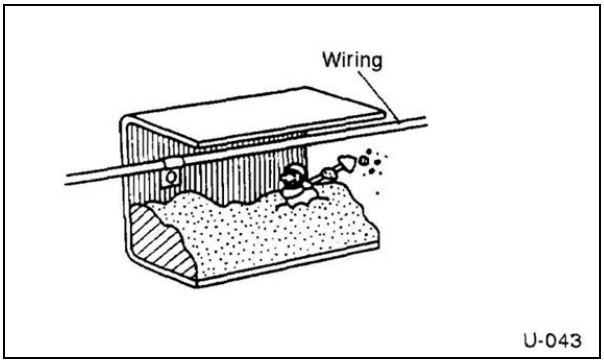

② Always use a grommet at a metal plate through hole to protect the wiring against water entry or damage.

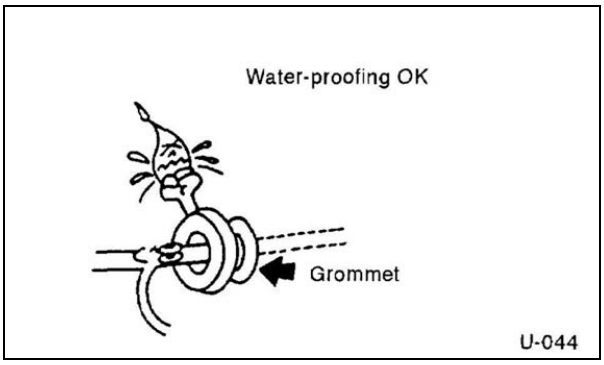

③ Mount a cover or a protector to prevent water entry along the wiring.

· A water-proof boot should be installed facing down.

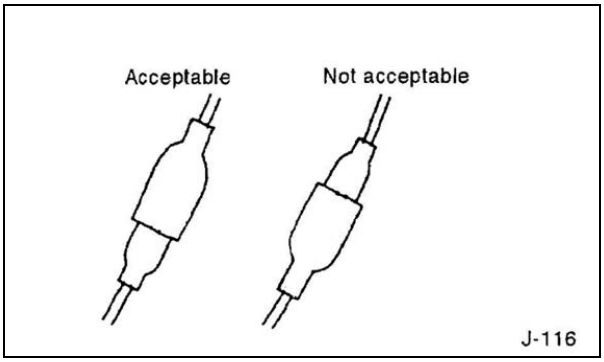

④ A connector, if used at a position exposed to water, should always be of water-proof type.

⑤ To prevent water from running along wires, always make connections that the connector/terminal of electrical equipment is higher than the wire.

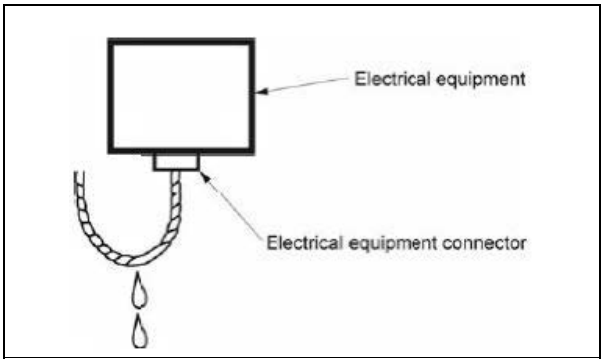

(5) Heat consideration

Keep the wiring away from the exhaust pipe by 150 mm minimum, and from the muffler by 250 mm minimum.

· In cases where the above clearance can not be satisfied, protection against the heat such as a heat insulating plate is required.

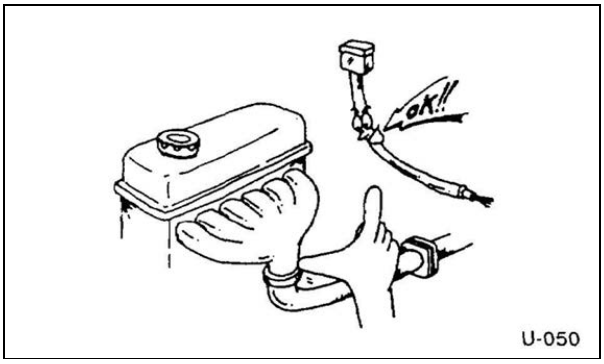

U-050

(6) Interference

① Take care that the wiring is not damaged by contact with the rotating or vibrating parts of the alteration or building.

② The wiring of the parts mounted on the engine or transmission should be laid along the existing wire harness with a sufficient sag in a manner to absorb relative motions while taking care that it does not come in contact with other parts.

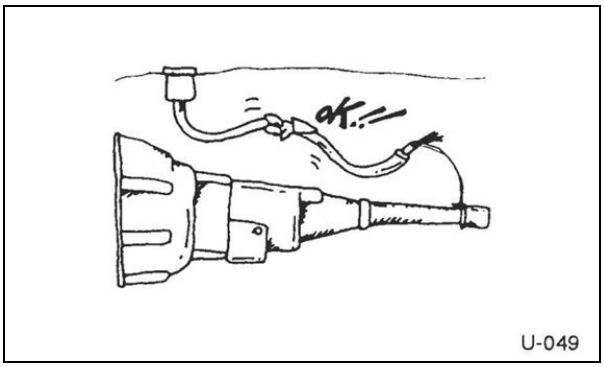

U-049

(7) Earth

① Install the earth for an additional power supply always on the engine or frame.

② Mount the earth terminal securely in the form of a circular plate terminal.

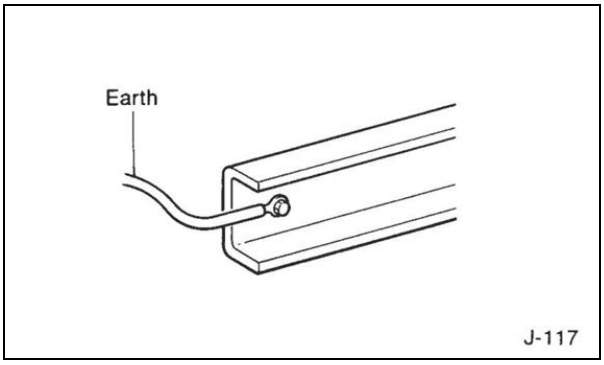

J-117

[3] Fuse

① Fuses of optimum capacity must be used for vehicles considering the operating electrical load and the operating frequency. Don't add any electrical load from accessories to the existing fuses.

② Always be sure to insert a fuse in an added wiring circuit. Use a vinyl-coated clamp, taking adequate care against short circuit.

· The fuse capacity should be about 1.4 times the load current.

Ex : For the load current of 3A,
3 x 1.4 = 4.2
Therefore, the standard fuse capacity of 5A is the best choice.

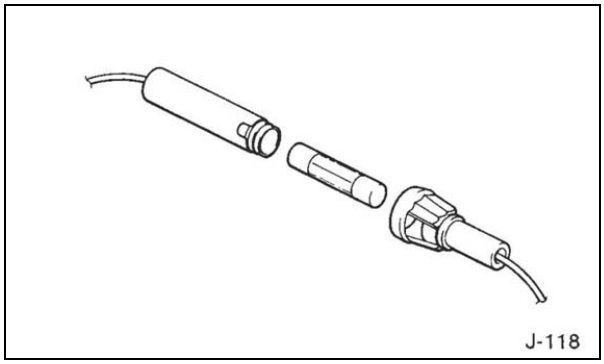

Fuse rated current against load (Automobile Standard JASO D610-75)

Load current, A	below 7	7 min. and below 10	10 min. and below 14	14 min. and below 21
Fuse rated current, A	10	15	20	30

A 5A fuse can be used for the load current of 3.5A maximum.

[4] Switch

Each switch has a tolerable current. When a current of more than this value flows, the switch generates heat shortening its life. In extreme cases, it may melt down.

In the worst case, a vehicle fire may be caused. Always comply with the specified tolerable current value of the switch.

· When using the existing switch, take care that the total of the load on the vehicle side and that of the added electrical equipment does not exceed the tolerable current of the particular switch.

Vehicle	+	Added electrical equipment	<	Switch

· In the case where the required current is larger than the tolerable current value of the particular switch, provide a relay commensurate with the load current of the electrical equipment to pass the current of the electrical equipment through a different circuit.

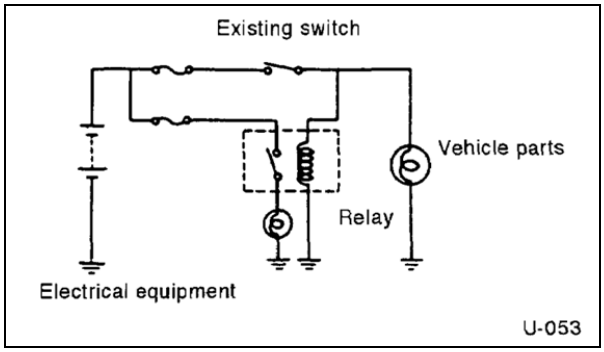

[5] Power supply

(1) Power supply

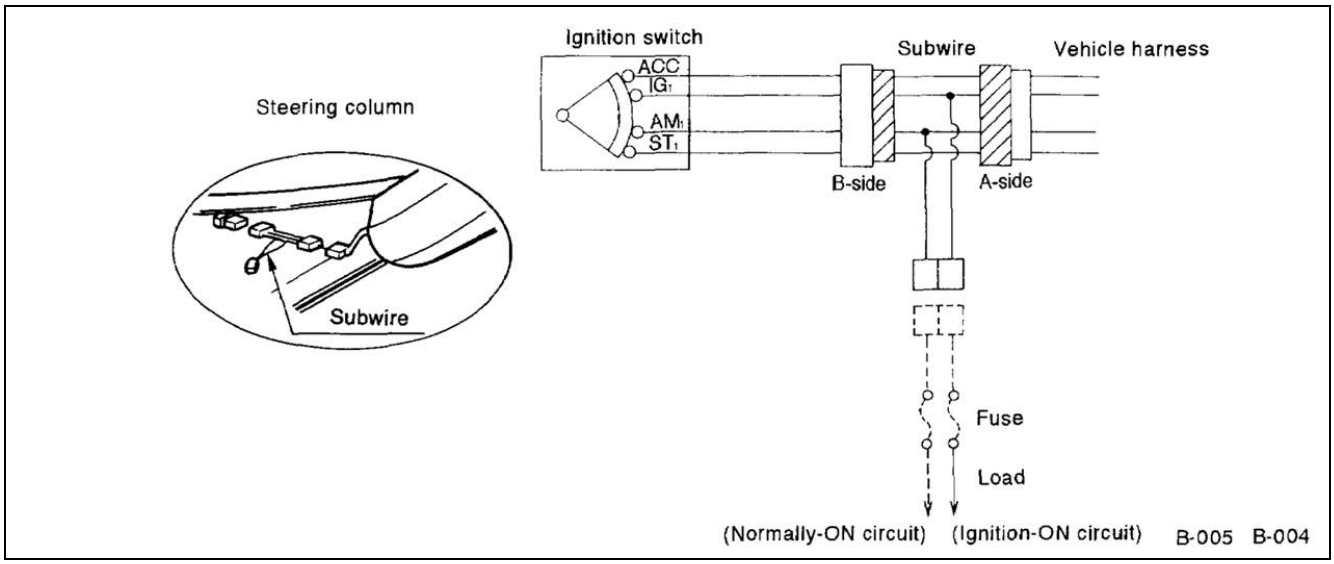

· Instructions

Interpose a subwire (with the wire of more than AV3 from subwire to fuse) between the ignition switch and the vehicle wire harness behind the combination meter to take out power.

(2) Connector style and wiring arrangement

· A-side connector(Part No.90980-11615)

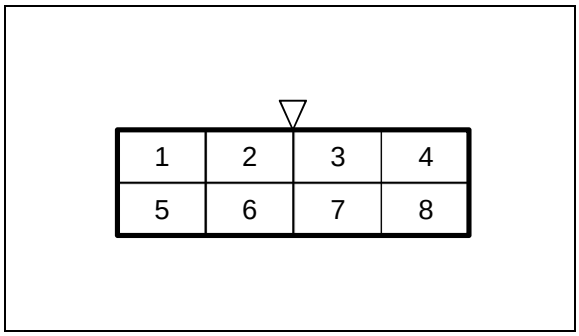

Connector arrangement	1	2	3	4
Power supply	IG1	ACC	ST1	AM1
Wire class	2 W	2 R-G	2 B	2 B-L

Connector arrangement	5	6	7	8
Power supply	AM2	IG2	-	-
Wire class	3 L	3 G	-	-

· Note : B-side connector (male side) Part No. 90980-11551

(3) Taking power directly from the battery

If you intend to take electrical power directly from battery, secure additional battery cable & battery terminal with the same nut. (For detail, see the following figure)

In this case, you must install a fuse at a suitable point in the circuit and take precautions to prevent short circuits as these may lead vehicle fires.
When securing additional battery cable and battery terminal, make sure you tighten the nut properly.

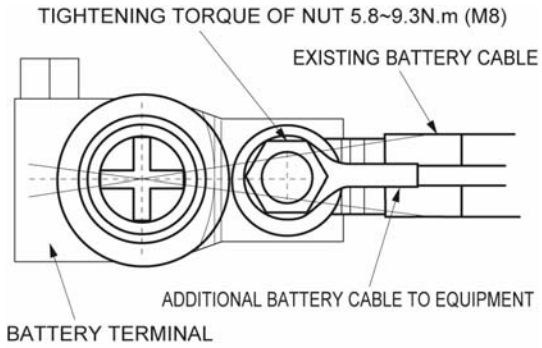

<u>Condition for additional battery cable terminal</u>

① If additional battery cable terminal thickness is not over than 1 mm., it is not necessary to change battery terminal.

② If additional battery cable terminal thickness is over than 1 mm., the battery terminal need to be changed to be longer stud bolt battery terminal (part no. 90982-05061) and the additional battery cable terminal thickness must not be over than 2.3 mm.
· Tightening torque of nut is required as above for both condition.

[6] Electrical wiring diagrams

This manual does not contain electrical wiring diagrams.
The electrical wiring diagrams are in the Publication MANUAL or Toyota Service Information website.
For more details, please consult your nearest Toyota dealer or distributor.

12. Mounting rear combination lamp

In the case of the cab & chassis model, the rear combination lamp is mounted as a rear combination lamp subassembly (for land transportation) shown in the drawing.

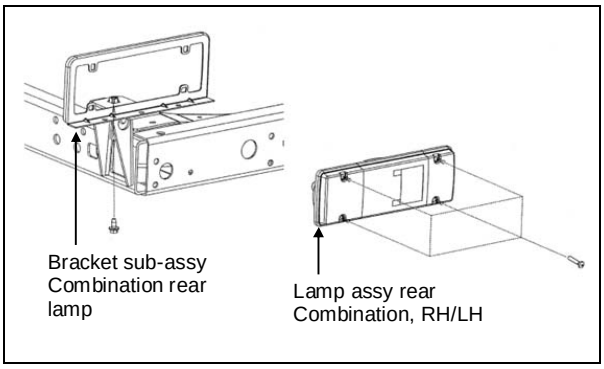

① Make sure that the rear combination lamp is mounted according to the laws and regulations of the countries concerned.

② See to it that the water drain hole of the rear combination lamp is located just under the lamp.

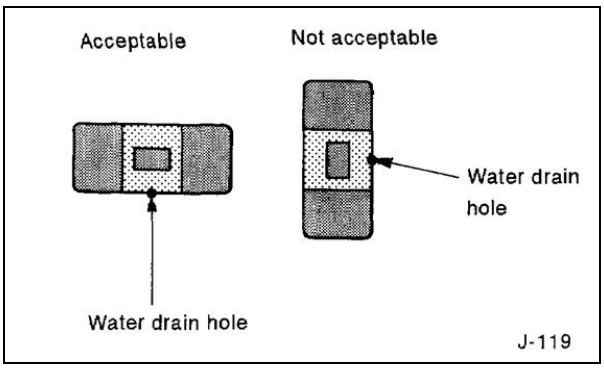

③ Take care that no object which blocks the field of view is located before the rear combination lamp.

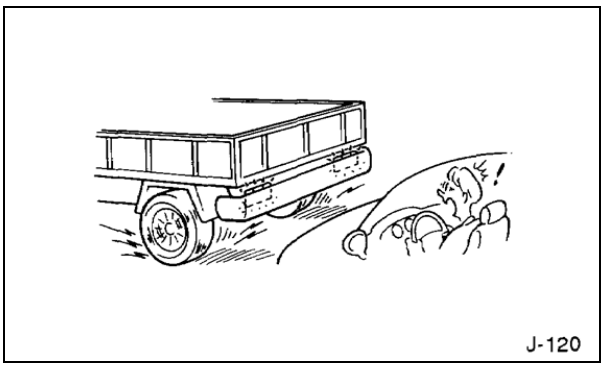

④ Install a water guard plate in order to prevent direct exposure to water splashed up from the rear wheels.

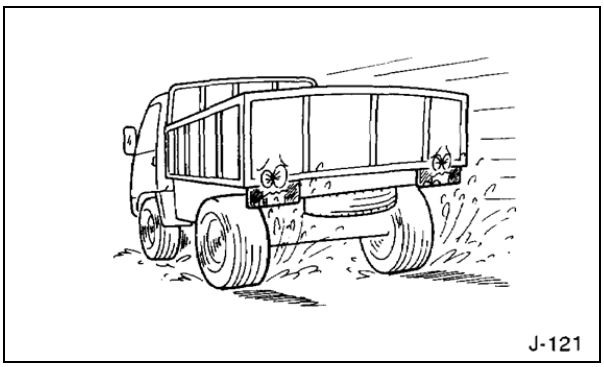

13. License plate and license lamp

A provisional license plate and a provisional license lamp are attached to the cab & chassis model being shipped. When attaching an official license plate, conform with the related laws and regulations of the country concerned.

① Fix the license plate by welding or bolting.

· When bolting, be sure to stake or weld the screw after mounting.

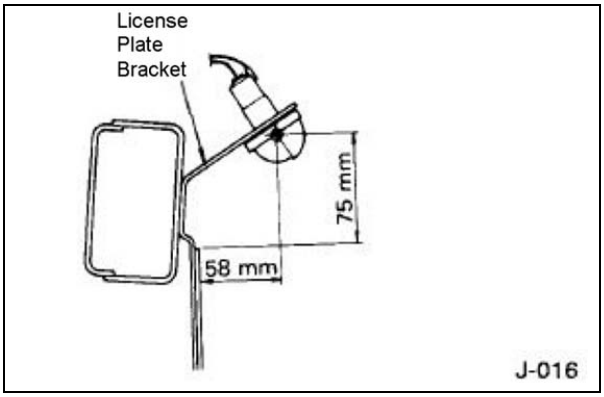

② Don't attach the license plate or the license lamp at a position where the rear bumper or the rear combination lamp is hidden or the operation of the spare tire carrier is adversely affected.

③ Mount the license lamp at such a position where it is not exposed directly to the water splashed by the rear wheels.

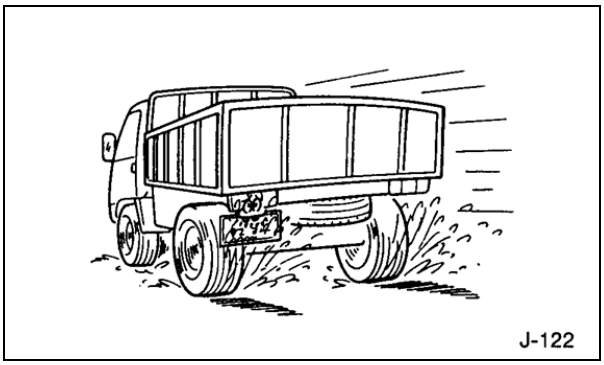

④ For the dimensions of the license plate and the license lamp, refer to the separate sheet.

14. Reflector

In the case where the reflector is not included in the rear combination lamp, mount a rear reflector of stand-alone type.

· Mount the side reflector according to the laws and regulations of the country concern

【3】DRAWINGS

MODEL
GRJ79L-TJMRK3 HZJ79L-TJMRS3

1-1. Cab & Chassis drawing

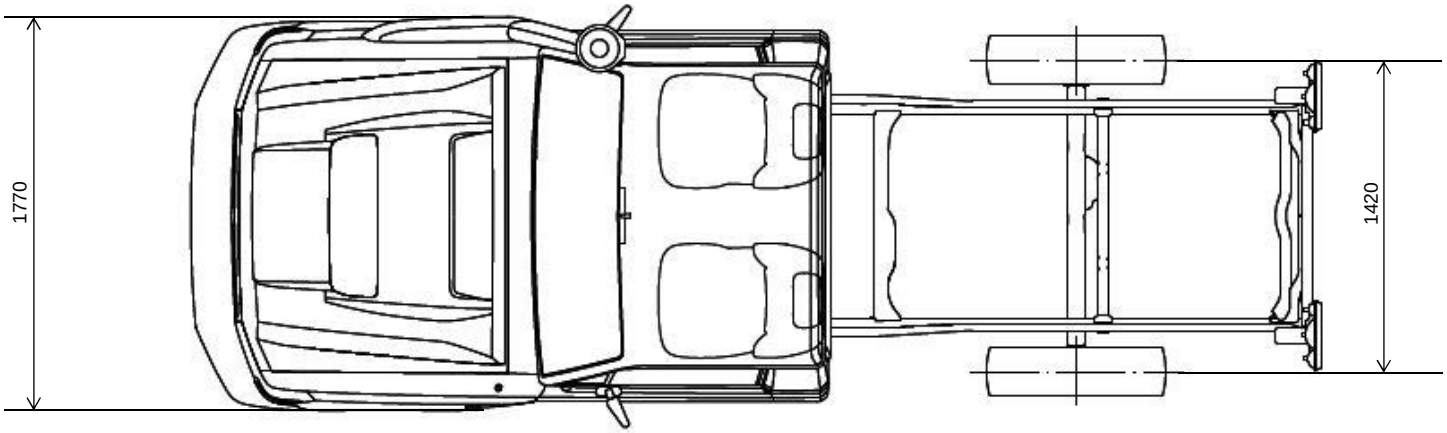

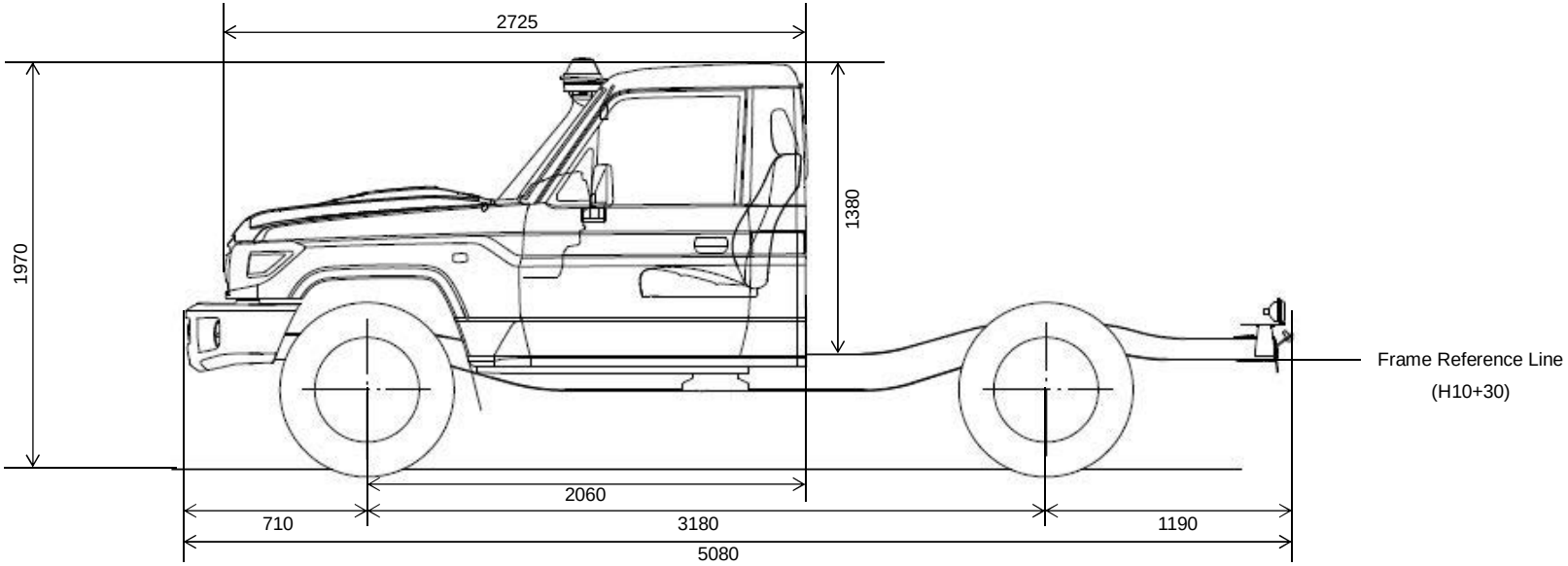

1-2. Cab & Chassis drawing

MODEL
VDJ79R-TJMRYQ3

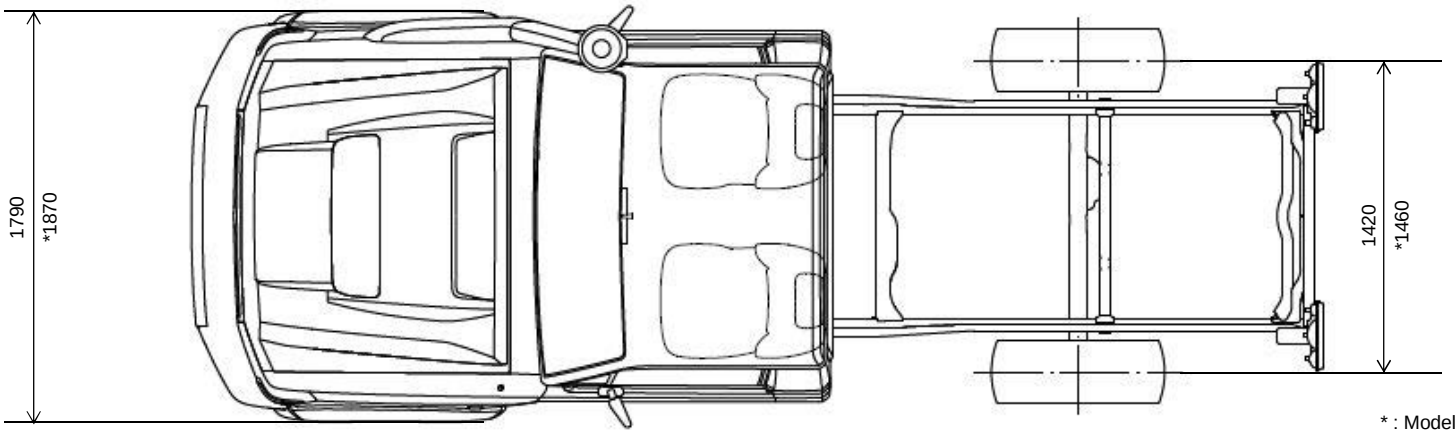

* : Models with 265/70R16 tires

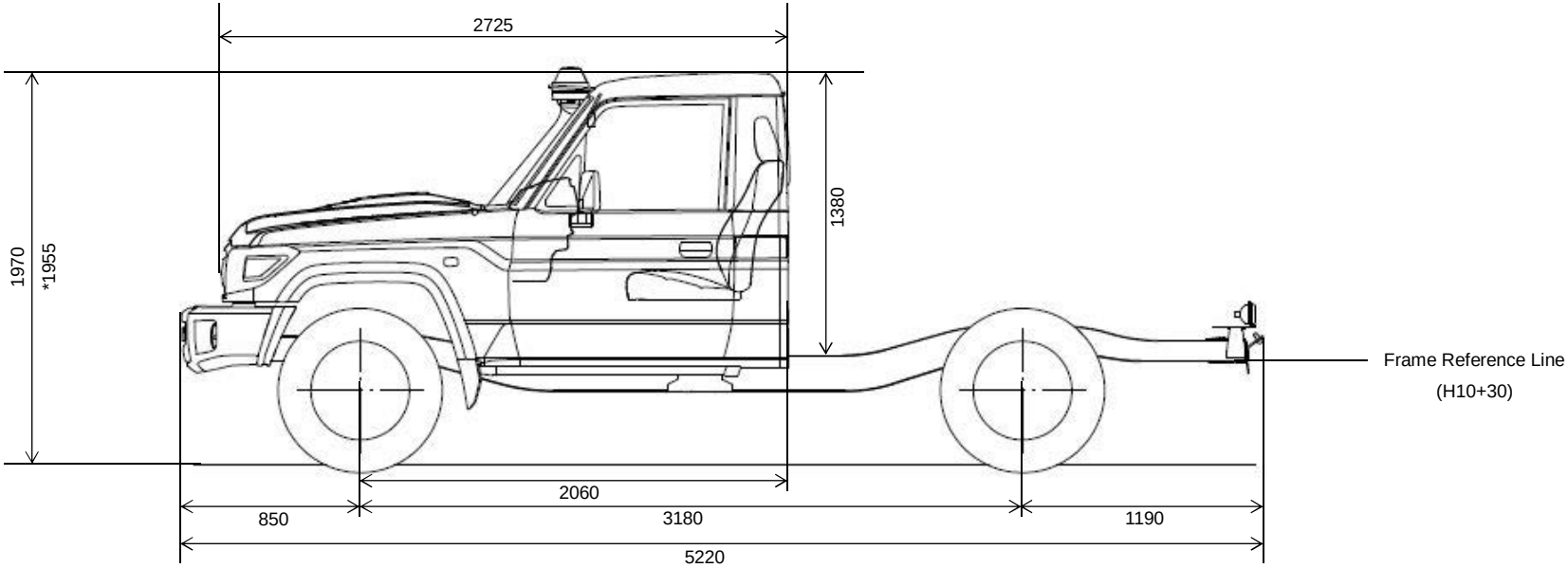

1-3. Cab & Chassis drawing

MODEL
VDJ79R-TJMNYQ3

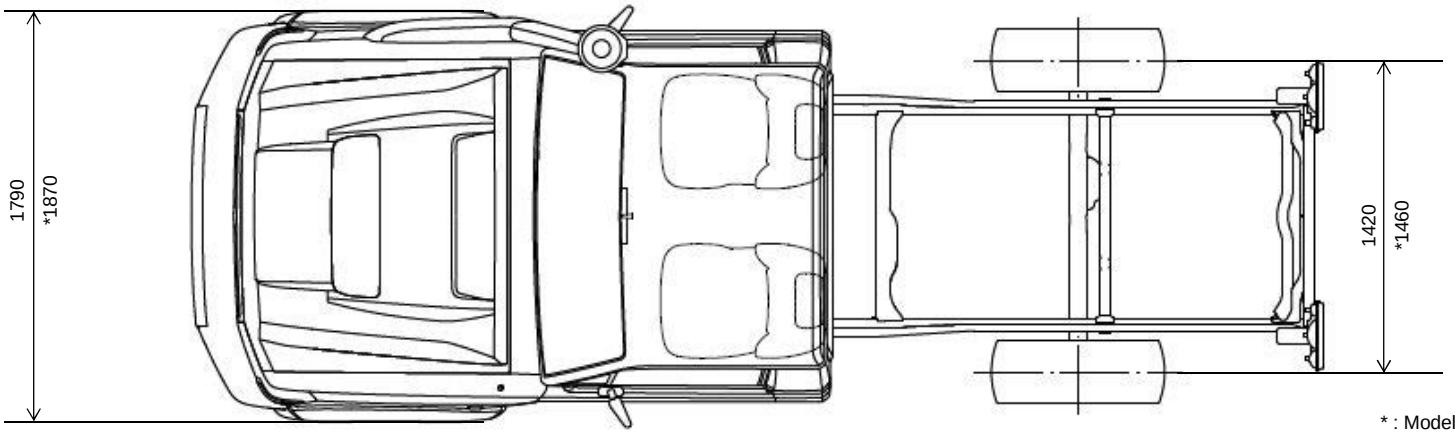

* : Models with 265/70R16 tires

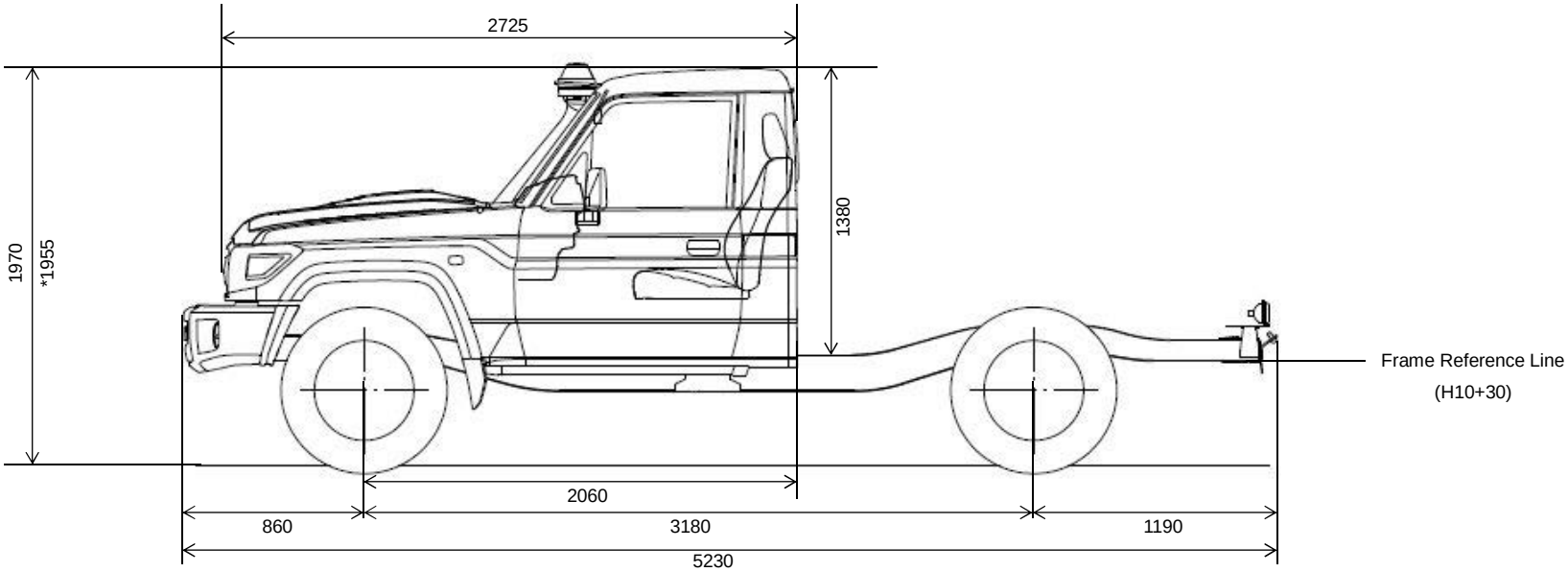

1-4. Cab & Chassis drawing

MODEL
VDJ79R-DKMRYQ3

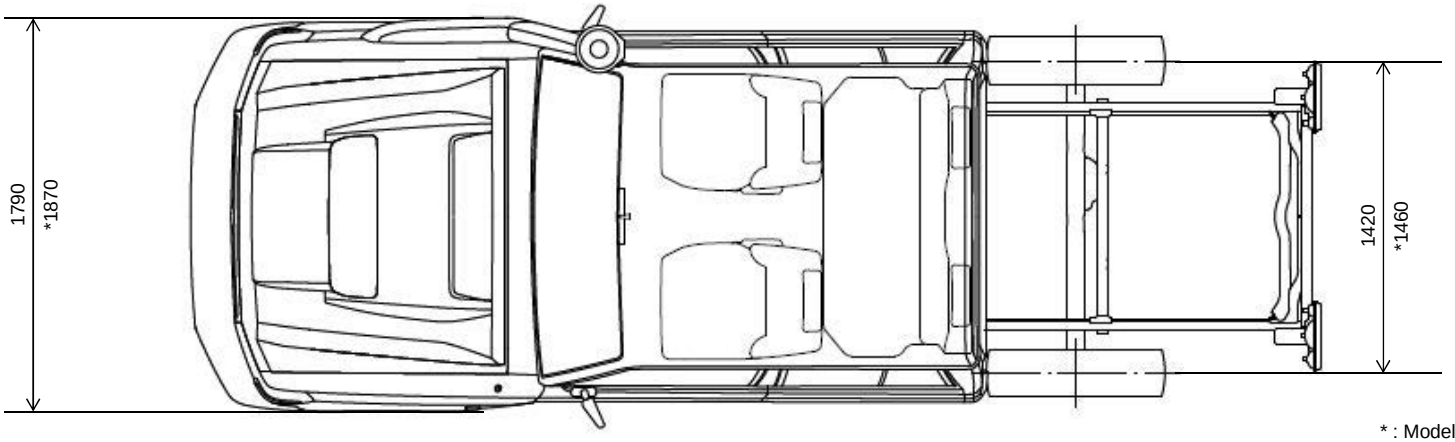

* : Models with 265/70R16 tires

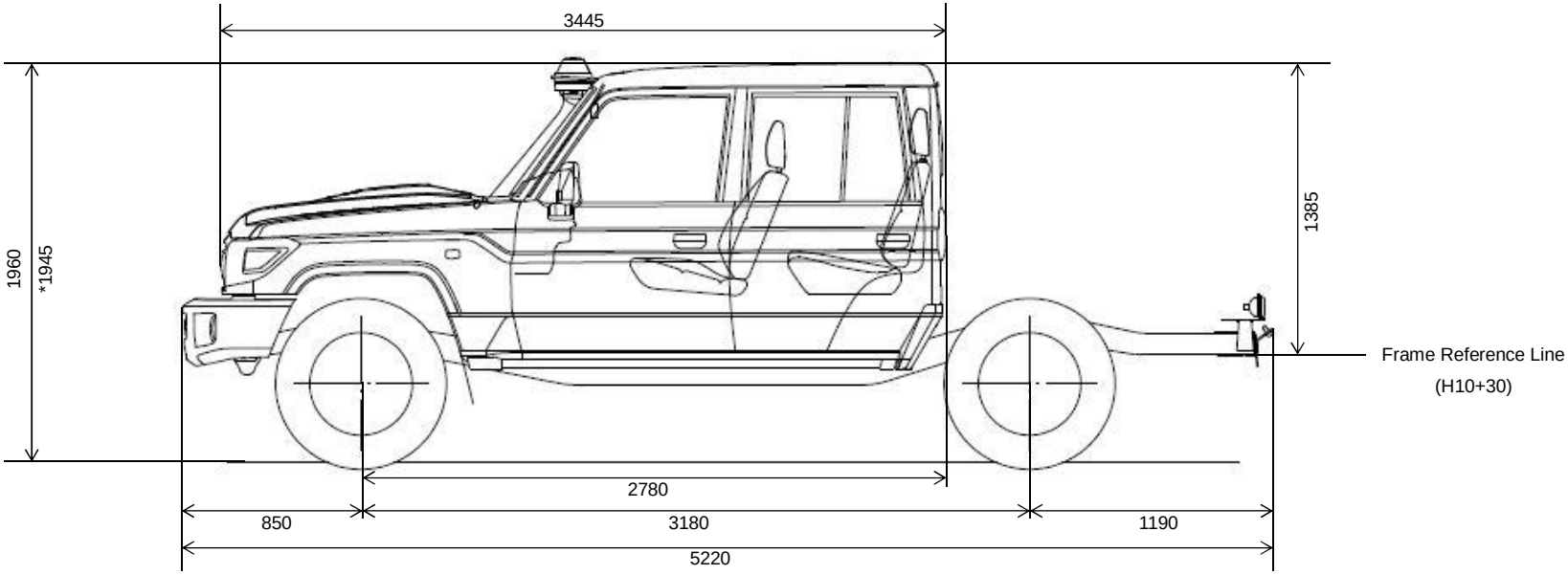

MODEL
GRJ79L-TJMRK3

2-1. Frame drawing

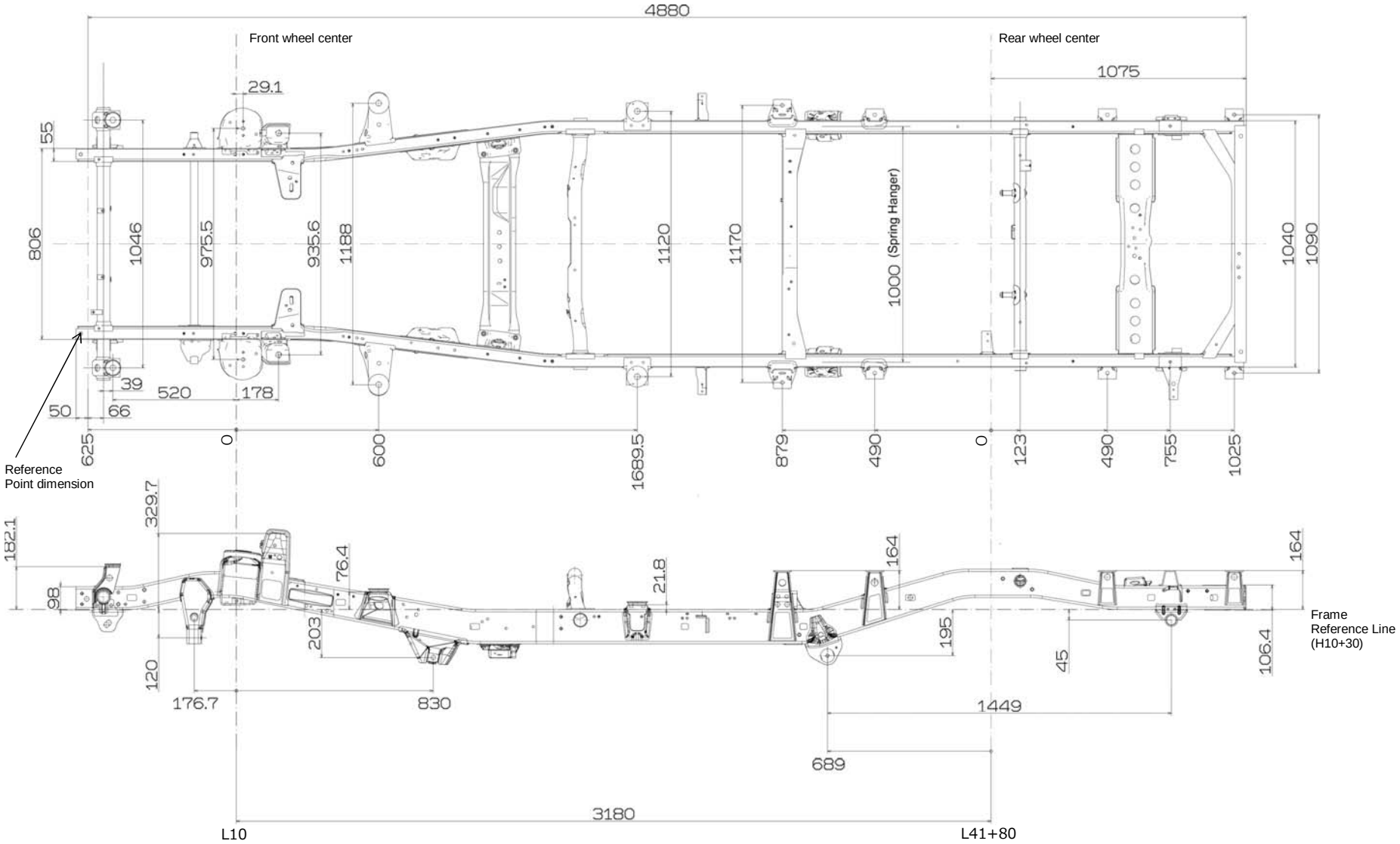

2-2. Frame drawing

MODEL
GRJ79L-TJMRK3 (with fuel sub tank)

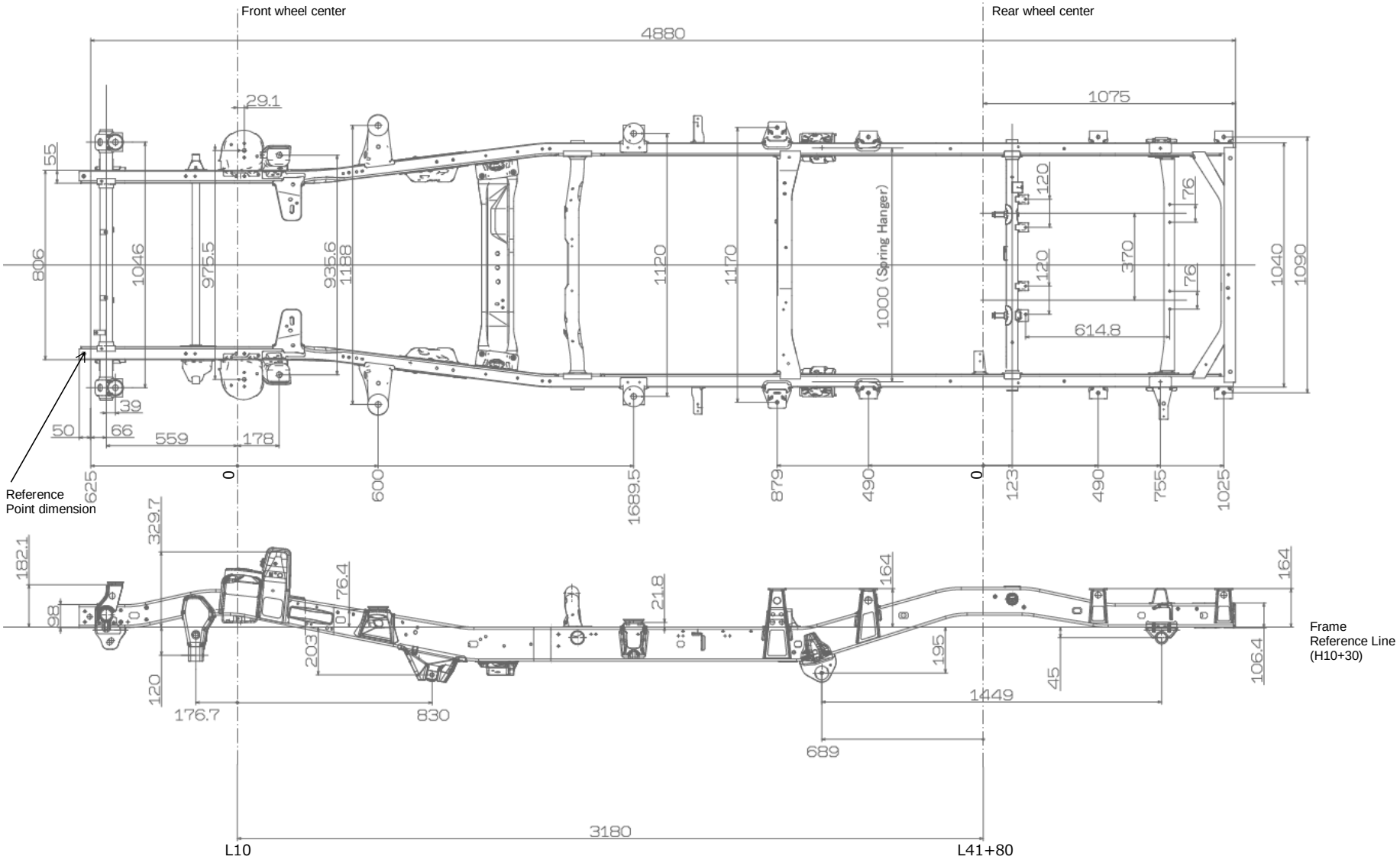

2-3. Frame drawing

MODEL
HZJ79L-TJMRS3

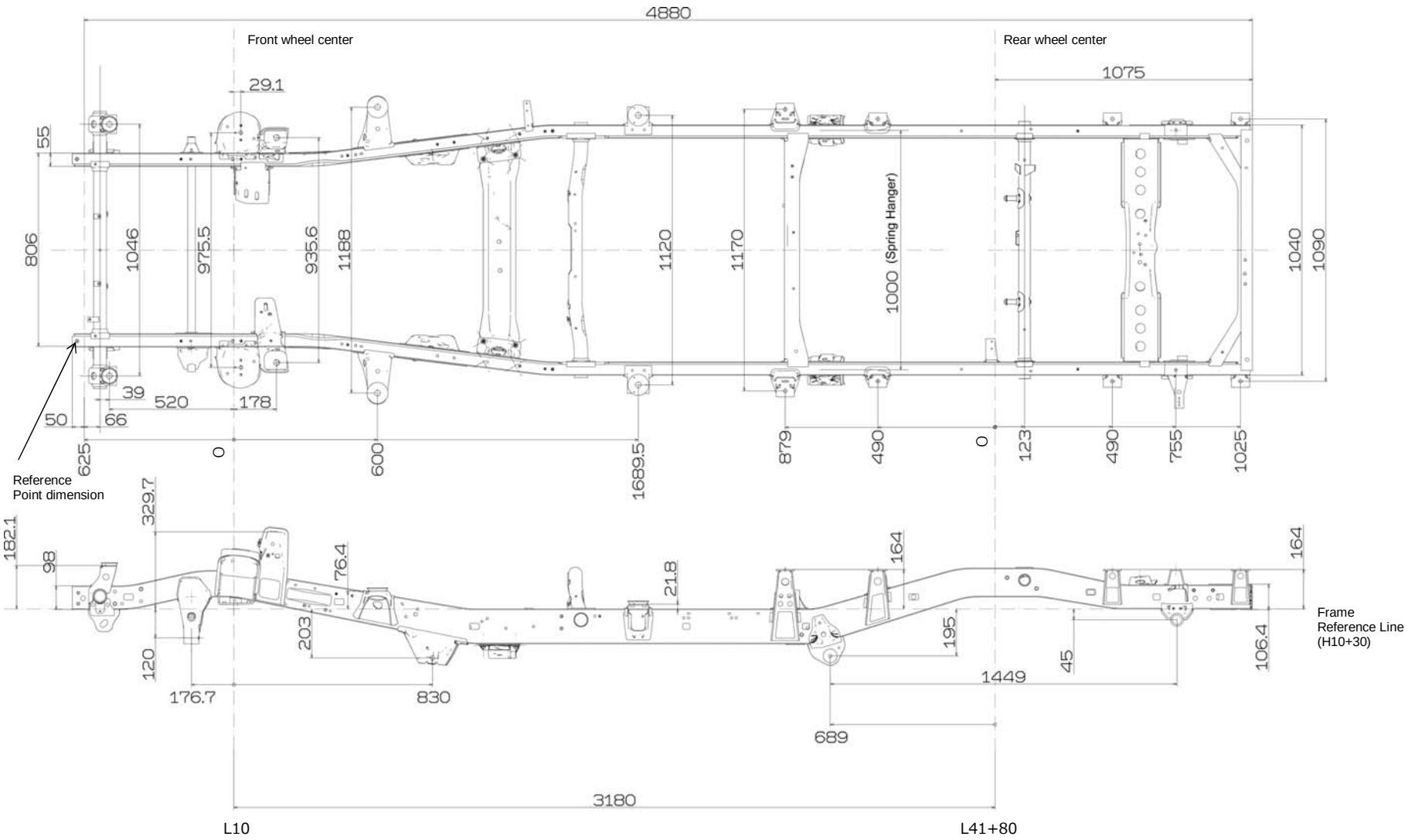

2-4. Frame drawing

MODEL
HZJ79L-TJMRS3 (with fuel sub tank)

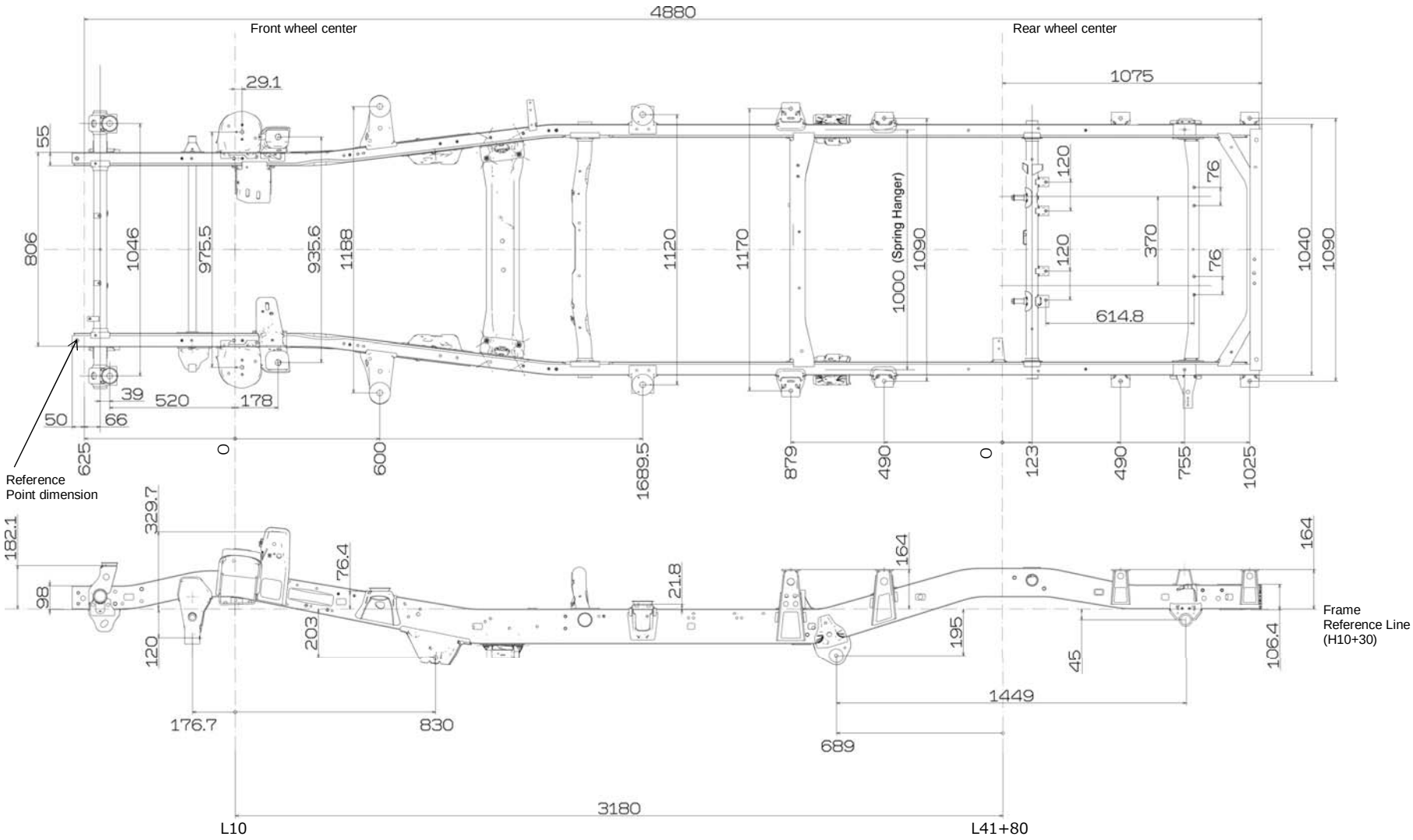

2-5. Frame drawing

MODEL
VDJ79R-TJMRYQ3 VDJ79R-TJMNYQ3

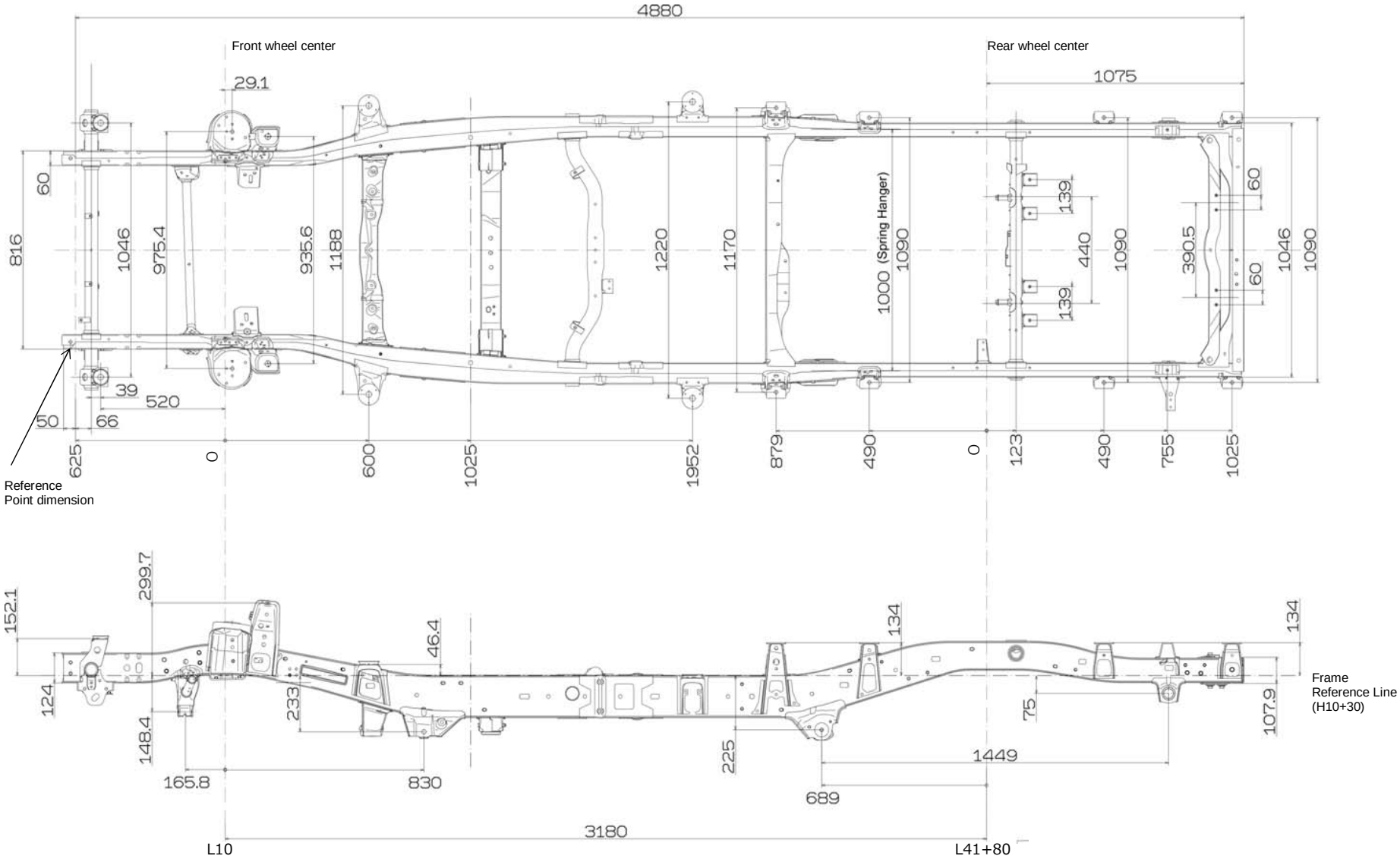

2-6. Frame drawing

MODEL
VDJ79R-DKMRYQ3

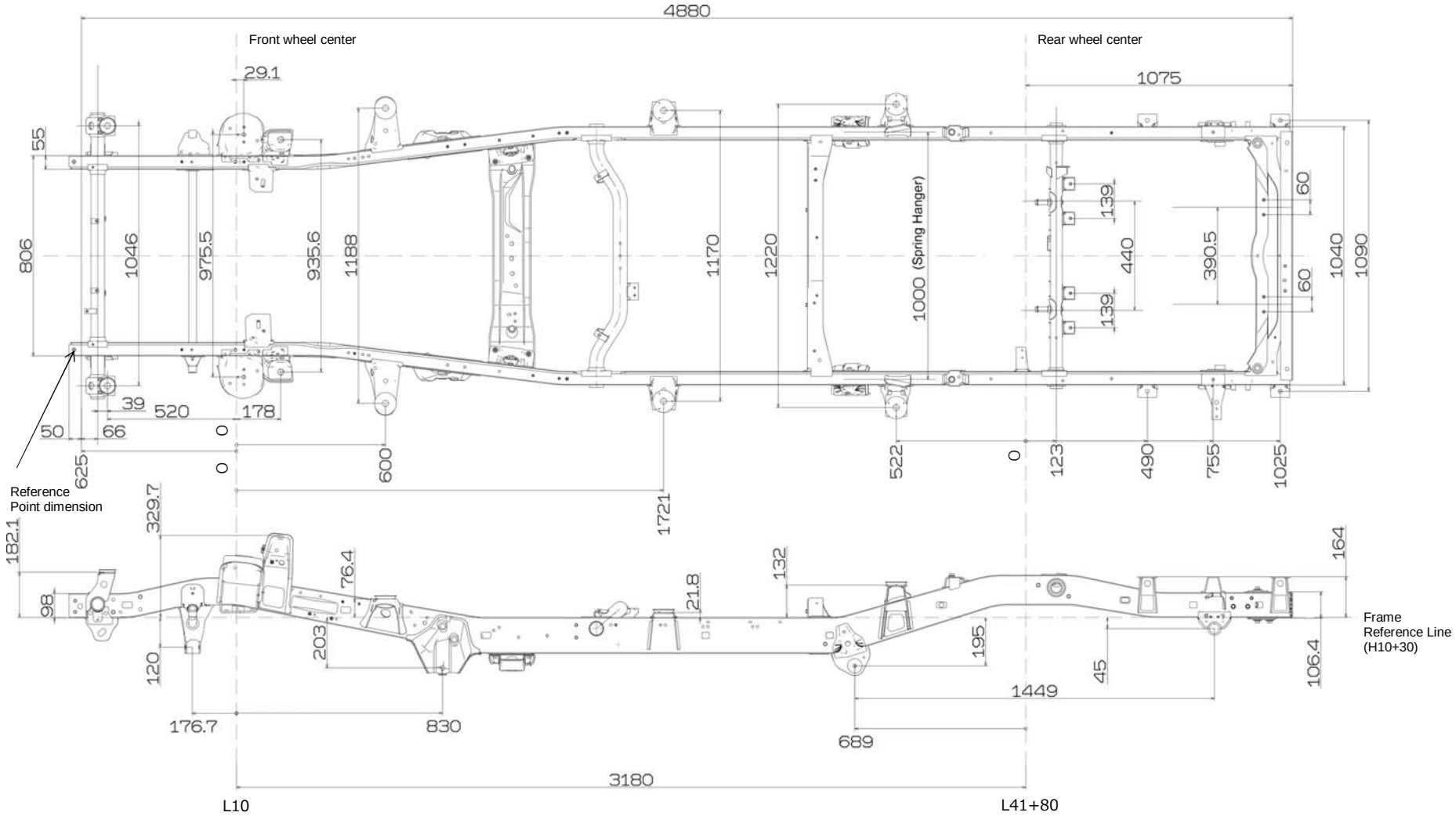

3-1. Exhaust pipe drawing

MODEL
GRJ79L-TJMRK3

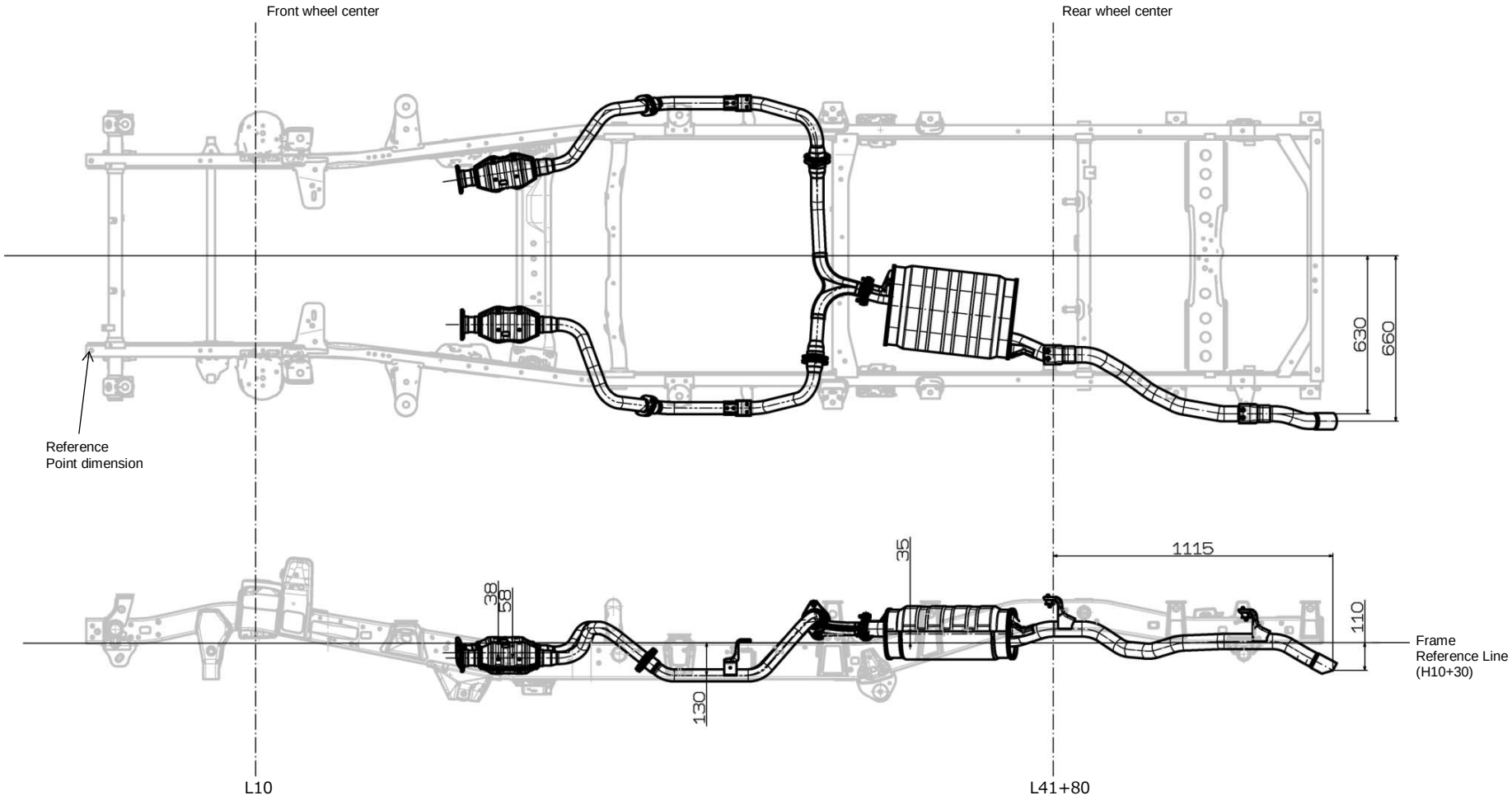

3-2. Exhaust pipe drawing

MODEL
HZJ79L-TJMRS3

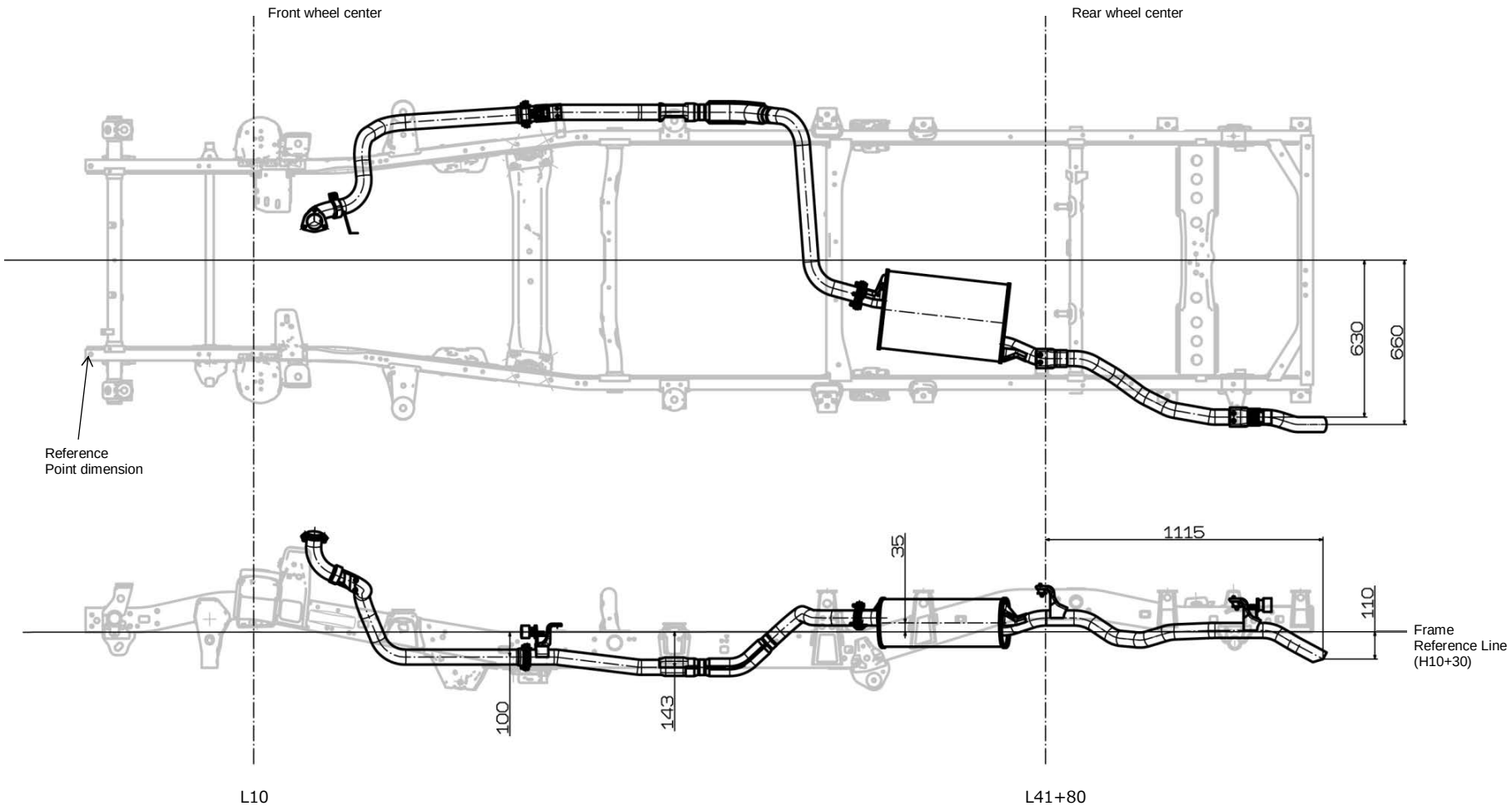

3-3. Exhaust pipe drawing

MODEL
VDJ79R-TJMNYQ3 VDJ79R-TJMRYQ3

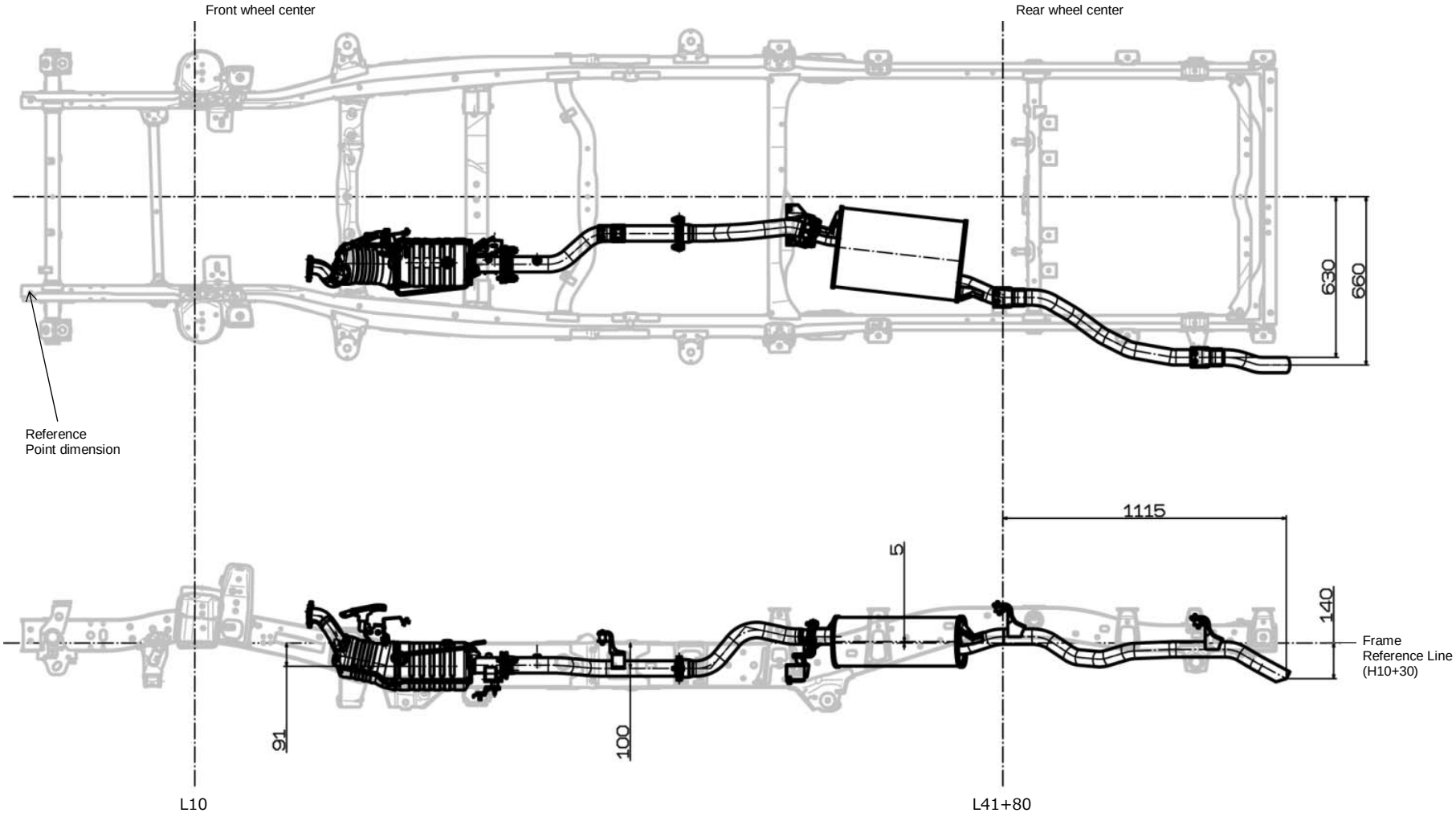

3-4. Exhaust pipe drawing

MODEL
VDJ79R-DKMRYQ3

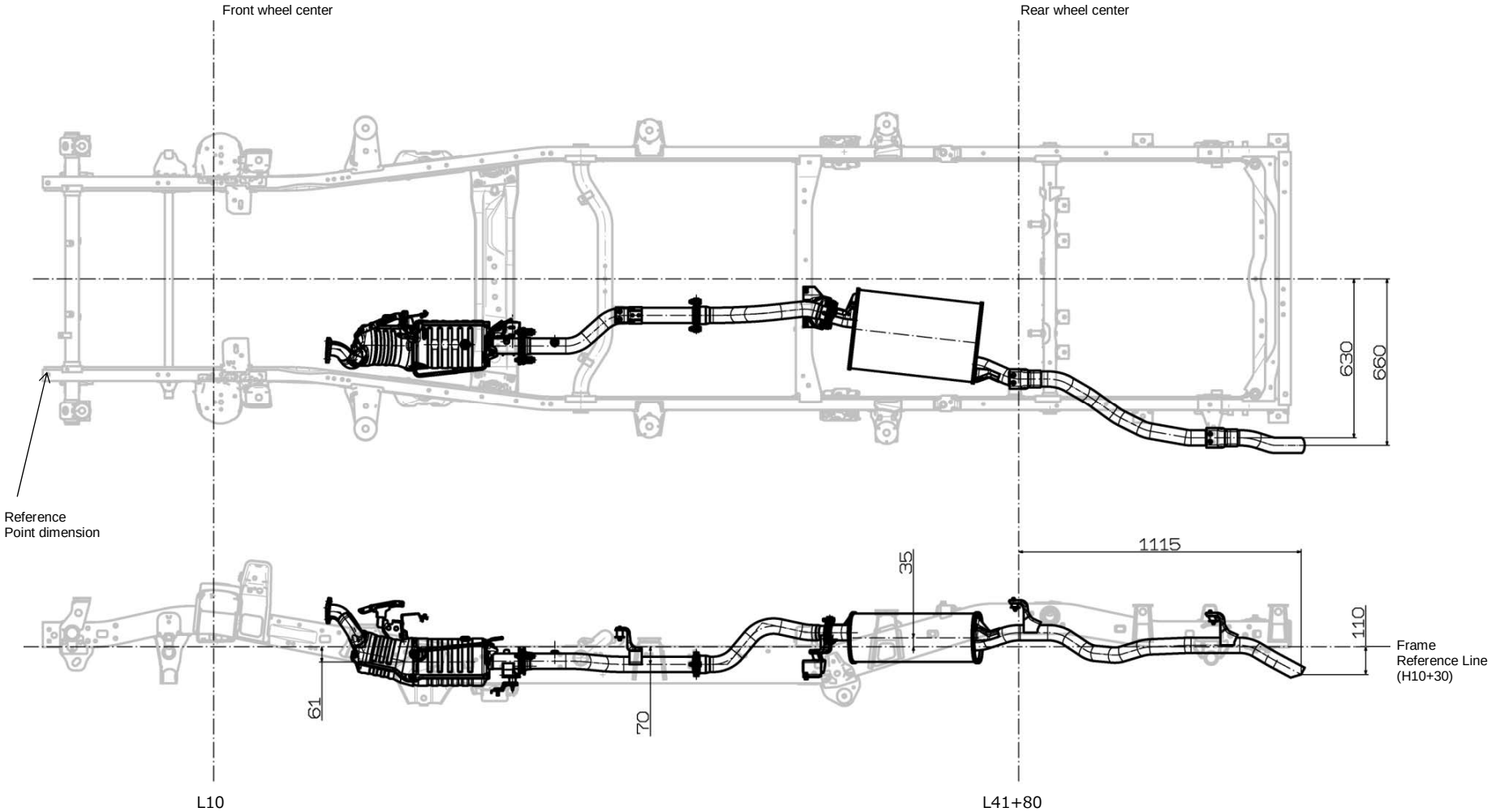

MODEL
GRJ79L-TJMRK3 HZJ79L-TJMRS3

4-1. Fuel tank installation-related drawings (Drawings for fuel tank)

・90L

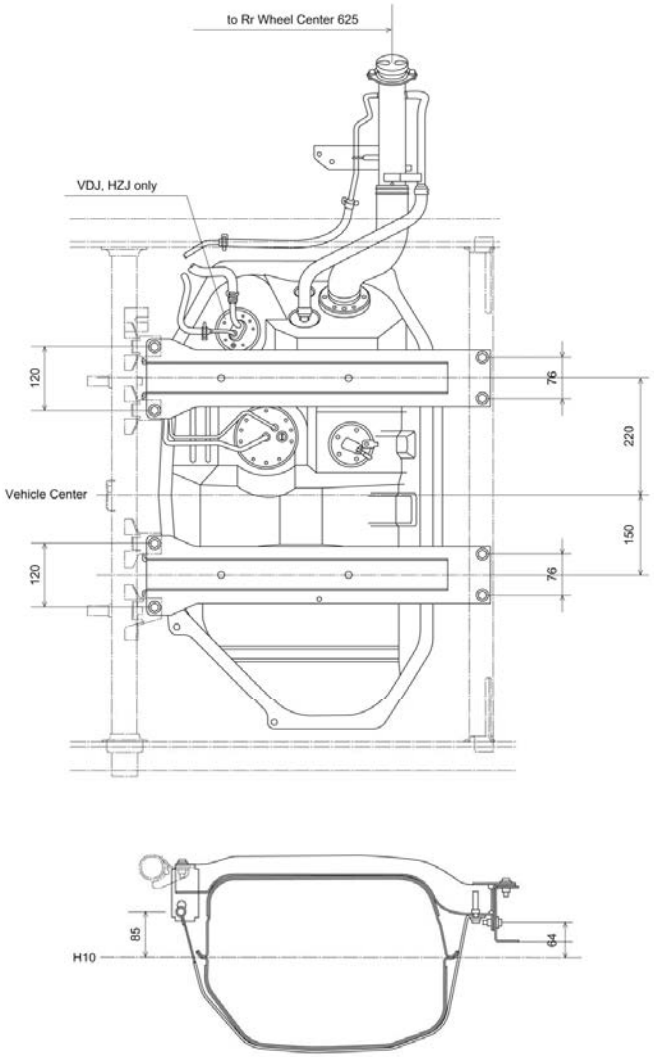

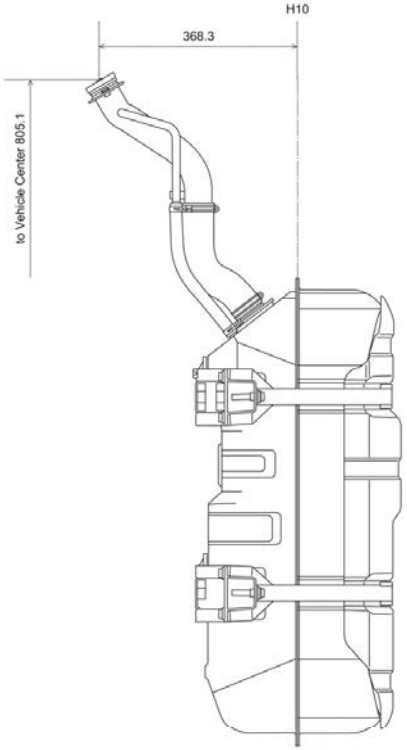

MODEL
VDJ79R-TJMRYQ3 VDJ79R-TJMNYQ3 VDJ79R-DKMRYQ3

・130L

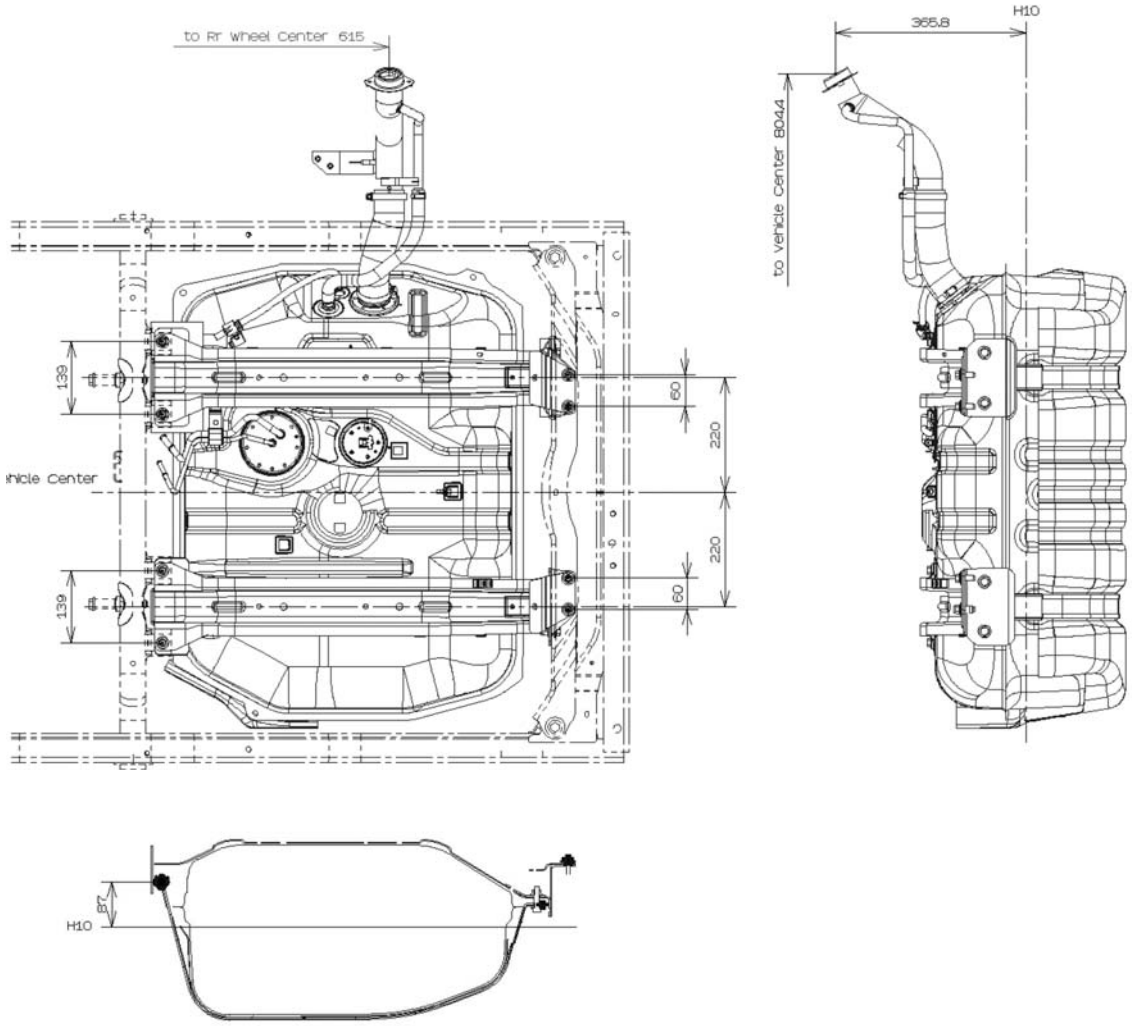

5. Rear combination lamp-related chart

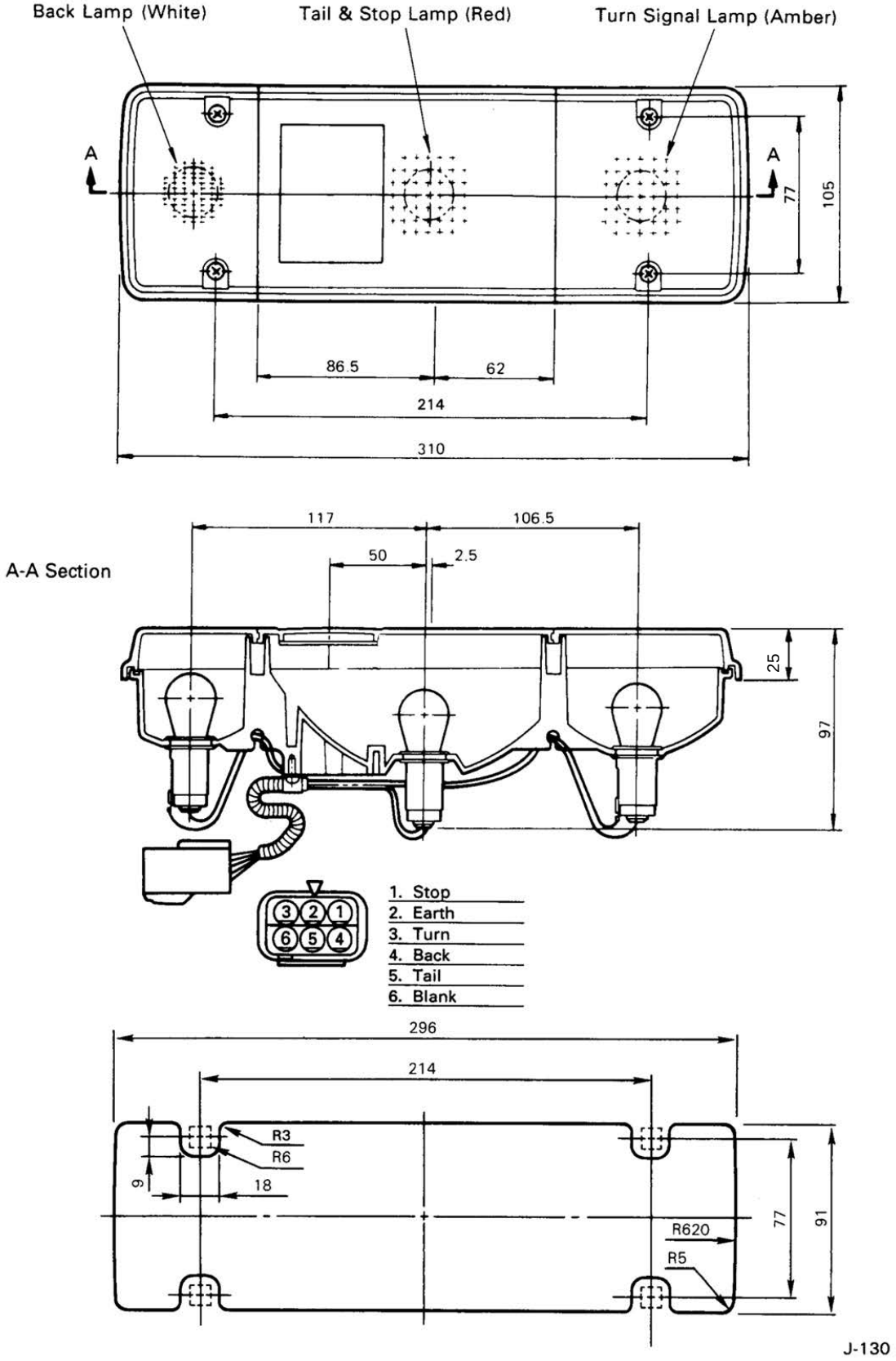

6-1. License lamp-related chart

License Lamp

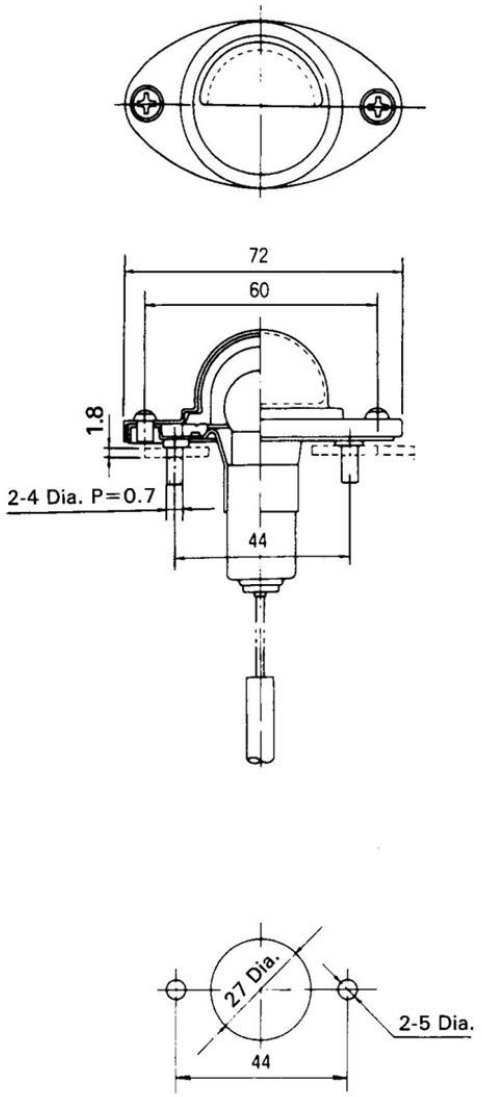

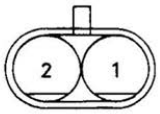

1. License Plate Lamp

2. Earth

J-131

6-2. License lamp-related chart

MODELS
ALL MODELS

License Plate

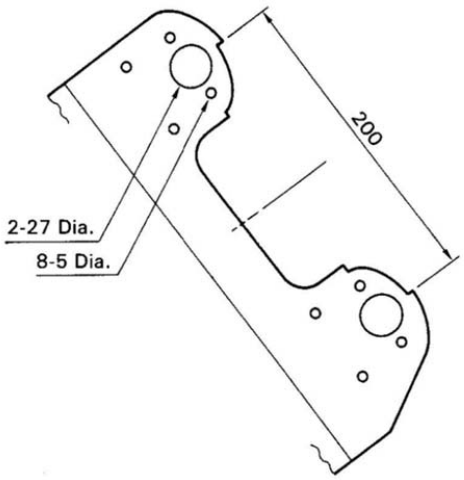

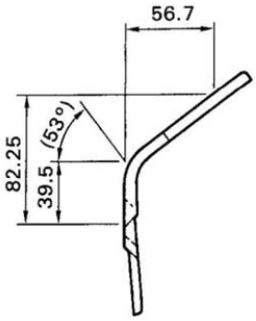

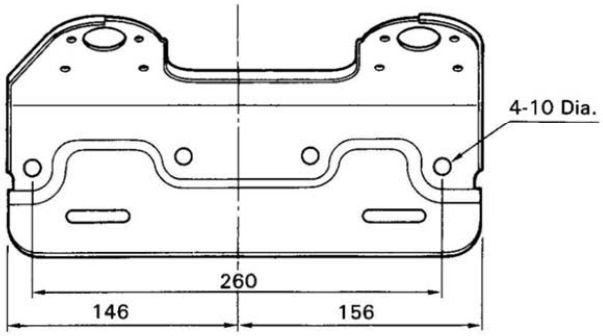

J-132

7-1. Alternator output characteristic

Model
GRJ79L-TJMRK3

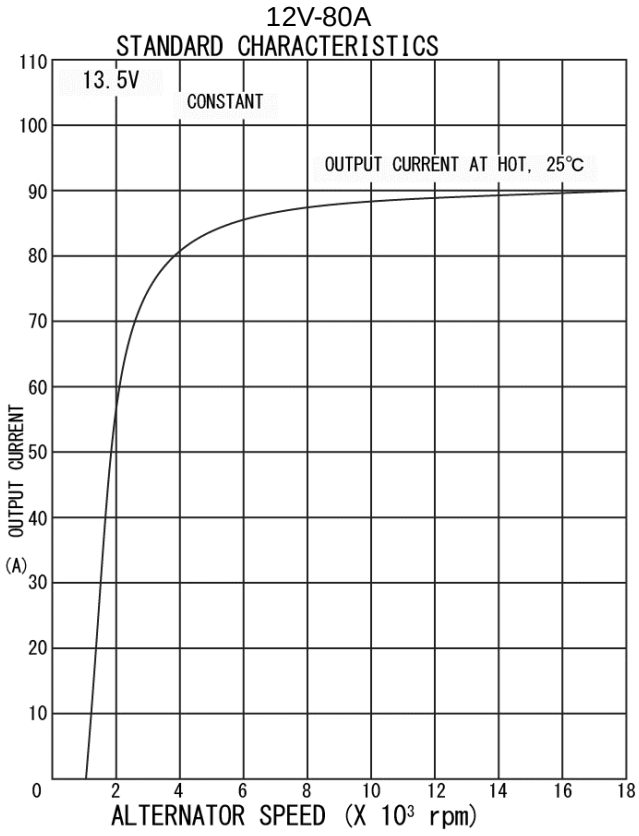

Model
HZJ79L-TJMRS3

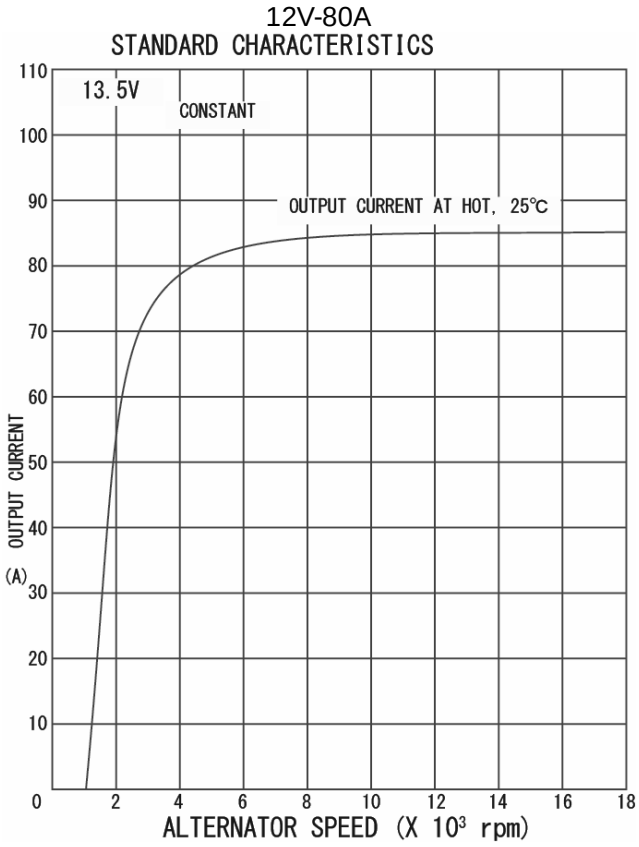

7-2. Alternator output characteristic

Model
VZJ79R-TJMRYQ3 VZJ79R-TJMNYQ3 VDJ79R-DKMRYQ3

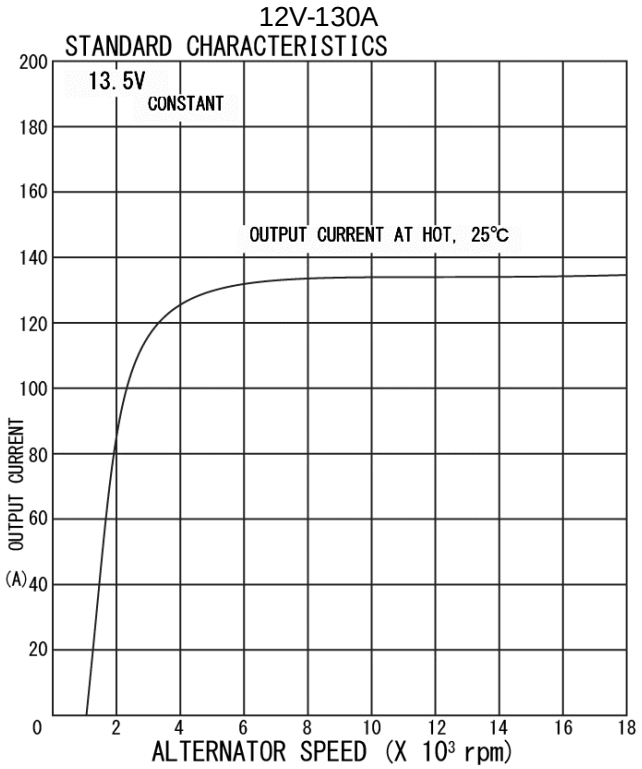

【4】MAJOR TECHNICAL SPECIFICATIONS

	Destination					General Countries	
	Body Type					Single Cab	
	Drive System					4X4	
	Model Code					GRJ79L-TJMRK3	HZJ79L-TJMRS3
Major Dimension	Overall	Length			mm	5080	5080
		Width			mm	1770	1770
		Height			mm	1970	1975
	Wheel Base				mm	3180	3180
	Tread		Front		mm	1515	1515
			Rear		mm	1420	1420
	Fuel Tank Capacity <Option>				Liters	90 <90+90>	90 <90+90>
	Seating Capacity				Persons	3	3
Weights	Unsprung Weight Axle		Front		Kg	250	250
			Rear		Kg	250	250
	Chassis and Cab Curb Weight		Front		Kg	1100 ~ 1245	1180 ~ 1325
			Rear		Kg	780 ~ 845	785 ~ 855
			Total		Kg	1880 ~ 2090	1965 ~ 2175
	Gross Vehicle Weight		Front		Kg	1335	1420
			Rear		Kg	1865	1780
			Total		Kg	3200	3200
	Max. Permissible Axle Capacity		Front		Kg	1480	1480
			Rear		Kg	2300	2300
	Min. Turning Radius (outside front tire)				m	7.2	7.2
Engine	Engine	Type				1GR-FE	1HZ
		Displacement			cc	3956	4164
		Max. Power			Kw/rpm	170/5200	96/3800
		Max. Torque			N.m/rpm	360/3800	285/2200
	Battery (20hr, rate)				V-Ah	12-55	12–55
	Alternator				Watts	960	960
	Starter				kW	1.4	2.5
Chassis	Transmission	Model				H150F	R151F
		Gear Ratio			1st	4.529	4.313
					2nd	2.464	2.330
					3rd	1.490	1.436
					4th	1.000	1.000
					5th	0.881	0.838
					Rev	4.313	4.220
	Differential	Gear Ratio				4.300	4.300
	Front Suspension	Coil Spring <Option> Heavy Duty	Size	Diameter	mm	136.9 <141.1>	137.1 <141.1>
				Height (set)	mm	310.0 <310.5>	310.0 <310.5>
				Diameter of wire	mm	14.7 <16.8>	14.8 <16.8>
				Rate	N/mm	38.2 <45.0~93.2>	38.2 <45.0~93.2>
	Rear Suspension	Leaf Spring <Option> Heavy Duty	Size	L * W * T-n	mm	1786*70*7 <1791*70*9> 1696*70*7 <1705*70*9> 1390*70*8 <1375*70*9> 1270*70*8 <1375*70*8> 1130*70*8 <1255*70*8> 1010*70*8 <1255*70*8> 830*70*15 <1140*70*8> 550*70*15 <1085*70*14> <895*70*14> <705*70*14> <515*70*14>	1786*70*7 <1791*70*9> 1696*70*7 <1705*70*9> 1390*70*8 <1375*70*9> 1270*70*8 <1375*70*8> 1130*70*8 <1255*70*8> 1010*70*8 <1255*70*8> 830*70*15 <1140*70*8> 550*70*15 <1085*70*14> <895*70*14> <705*70*14> <515*70*14>
			Rate		N/mm	48.1~103.0 <79.7~217.1>	48.1~103.0 <79.7~217.1>
	Tire	Size	Front & Rear			7.50R16C <225/95R16C>	7.50R16C <225/95R16C>
		Pressure	Front		kPa	250 <250>	250 <250>
			Rear		kPa	475 <475>	475 <475>
	Service & Brake	Control Valve				LSP&BV	LSP&BV

Refer to the owner's manual for optional equipment.

【4】MAJOR TECHNICAL SPECIFICATIONS

	Destination					Australia	
	Body Type					Single Cab	
	Drive System					4X4	
	Model Code					VDJ79R-TJMRYQ3	VDJ79R-TJMNYQ3
Major Dimension	Overall	Length			mm	5220	5230
		Width			mm	1790, 1870 *1	1790, 1870 *1
		Height			mm	1970, 1955 *1	1970, 1955 *1
	Wheel Base				mm	3180	3180
	Tread			Front	mm	1515, 1555 *1	1515, 1555 *1
				Rear	mm	1420, 1460 *1	1420, 1460 *1
	Fuel Tank Capacity (OPT)				Liters	130	130
	Seating Capacity				Persons	2	2
Weights	Unsprung Weight Axle			Front	Kg	250	250
				Rear	Kg	250	250
	Chassis and Cab Curb Weight			Front	Kg	1265 ~ 1295	1265 ~ 1295
				Rear	Kg	900 ~ 925	910 ~ 935
				Total	Kg	2165 ~ 2220	2175 ~ 2230
	Gross Vehicle Weight			Front	Kg	1470	1470
				Rear	Kg	1930	1930
				Total	Kg	3400	3400
	Max. Permissible Axle Capacity			Front	Kg	1500	1500
				Rear	Kg	2300	2300
	Min. Turning Radius (outside front tire)				m	7.2	7.2
Engine	Engine		Type			1VD-FTV	1VD-FTV
			Displacement		cc	4461	4461
			Max. Power		Kw/rpm	151/3400	151/3400
			Max. Torque		N.m/rpm	430/1200-3200	430/1200-3200
	Battery (20hr, rate)				V-Ah	12-64	12-64
	Alternator				Watts	1560	1560
	Starter				kW	2.7	2.7
Chassis	Transmission		Model			H152F	H152F
			Gear Ratio		1st	4.529	4.529
					2nd	2.294	2.294
					3rd	1.490	1.490
					4th	1.000	1.000
					5th	0.750	0.750
					Rev	4.313	4.313
	Differential	Gear Ratio				3.909	3.909
	Front Suspension	Coil Spring	Size	Diameter	mm	138.3	138.3
				Height (set)	mm	310.0	310.0
				Diameter of wire	mm	15.4	15.4
				Rate	N/mm	42.2	42.2
	Rear Suspension	Leaf Spring	Size	L * W * T-n	mm	1790*70*7.5 1721*70*7.5 1345*70*7.5 1235*70*7.5 1125*70*8 1010*70*8 845*70*13 660*70*13 450*70*13	1790*70*7.5 1721*70*7.5 1345*70*7.5 1235*70*7.5 1125*70*8 1010*70*8 845*70*13 660*70*13 450*70*13
			Rate		N/mm	47.9 ~ 104.2	47.9 ~ 104.2
	Tire	Size <Option>		Front & Rear		225/95R16C <7.50R16LT> <265/70R16LT>	225/95R16C <7.50R16LT> <265/70R16LT>
		Pressure <Option>		Front	kPa	250 <250> <250>	250 <250> <250>
				Rear	kPa	475 <475> <350>	475 <475> <350>
	Service & Brake	Control Valve				-	-

*1: Models with 265/70R16 tire
Refer to the owner's manual for optional equipment.

【4】MAJOR TECHNICAL SPECIFICATIONS

	Destination					Australia
	Body Type					Double Cab Pick-up
	Drive System					4X4
	Model Code					VDJ79R- DKMRYQ3
Major Dimension	Overall	Length			mm	5220
		Width			mm	1790, 1870*1
		Height			mm	1960, 1945*1
	Wheel Base				mm	3180
	Tread			Front	mm	1515, 1555*1
				Rear	mm	1420, 1460*1
	Fuel Tank Capacity				Liters	130
	Seating Capacity (OPT)				Persons	5
Weight	Unsprung Weight Axle			Front	Kg	250
				Rear	Kg	250
	Chassis and Cab Curb Weight			Front	Kg	1235 ~ 1275
				Rear	Kg	940 ~ 975
				Total	Kg	2175 ~ 2250
	Gross Vehicle Weight			Front	Kg	1450
				Rear	Kg	1850
				Total	Kg	3300
	Max. Permissible Axle Capacity			Front	Kg	1480
				Rear	Kg	2300
	Min. Turning Radius (tire)				m	7.2
Engine	Engine		Type			1VD-FTV
			Displacement		cc	4461
			Max. Power		Kw/rpm	151/3400
			Max. Torque		N.m/rpm	430/1200-3200
	Battery (5HR)				V-Ah	12-64
	Alternator				Watts	1560
	Starter				kW	2.7
Chassis	Transmission		Model			H152F
			Gear Ratio		1st	4.529
					2nd	2.294
					3rd	1.490
					4th	1.000
					5th	0.750
					Reverse	4.313
	Differential	Gear Ratio				3.909
	Front Suspension	Coil Spring	Size	Diameter (upper)	mm	138.3
				Height (set)	mm	310.0
				Diameter of wire	mm	15.4
				Rate	N/mm	42.2
	Rear Suspension	Leaf Spring	Size	L ∗ W ∗ T-n	mm	1786*70*7
						1696*70*7
						1390*70*8
						1270*70*8
						1130*70*8
						1010*70*8
						830*70*15
						550*70*15
			Rate		N/mm	48.1 ~ 103.0
	Tire	Size <Option>		Front & Rear		225/95R16C <7.50R16LT> <265/70R16LT>
		Pressure <Option>		Front	kPa	250 <250> <250>
				Rear	kPa	450 <475> <350>
	Service & Brake	Control Valve		LSPV		-

*1:Models with 265/70R16 tires
Refer to the owner's manual for optional equipment.

C&A Operations Division
TOYOTA MOTOR CORPORATION
Nisshin Education & Training Center
5-210, Sakae
Nisshin City, Aichi Prefecture
JAPAN 470-0113