1. OUTLINE OF ADDITIONAL DEVICES

Distributor type pumps are equipped with various types of supplementary mechanisms, and the main types of additional devices are described below.

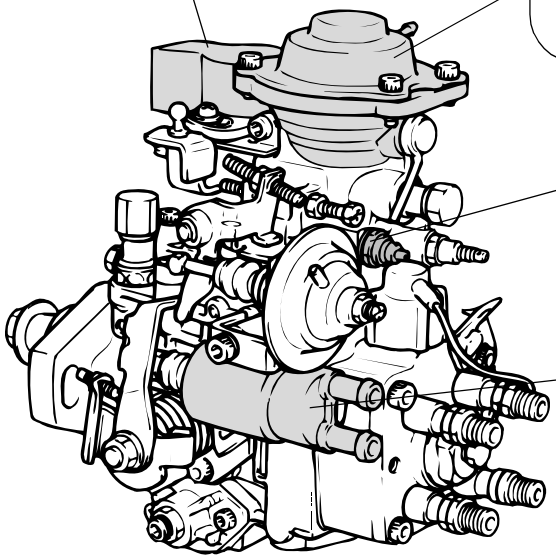

- Rotary Position Sensor (RPS)
  Detects the amount of opening of the adjusting lever, which is used primarily for EGR control (and the automatic transmission).

- Boost Compensator (BCS)
  Increases the fuel delivery in accordance with the boost pressure to realize optimal combustion.
- Boost & Altitude Compensator (BACS)
- Diesel Altitude Compensator (DAC)
  Decreases the fuel delivery at high altitudes in order to prevent the smoke density from increasing.

NOTE: The diagram shows a boost compensator (BCS).

- Dash Pot
  Smoothes the torque fluctuation during deceleration to enable the engine to decelerate smoothly.

- Automatic Cold Start Device (ACSD)
  Advances the injection timing to facilitate the starting of a cold engine, and increases the idle rpm to shorten the warm-up time of the engine.

- Load Sensing Timer (LST)
  Controls the amount of timer advance in accordance with the engine load. The amount of advance is decreased under a light load, and the amount of advance is increased under a heavy load.
- Power Control System (PCS)
  Decreases thefuel delivery in 1st and reverse gears when the drive force is greater, thus protecting the vehicle's drivetrain.
- Pilot Injection Device (PIJ)
  The purpose of this device is to reduce the amount of noise and NOx during idle.
- Externally Adjustable Timer
  The method for adjusting the timer has been changed from the shim replacement to the adjusting screw type.
- Servo Timer
  It is a timer with improved operational stability and response.
- Dual Lever (supplementary mechanism)
  Simplifies the adjustment of the lever angle.
- Lever Angle Reduction Lever (supplementary mechanism)
  Improves the pump's performance in following the movement of the accelerator pedal.

PU0051

NOTE: The types of additional devices that are installed vary from model to model.

Donated by Onur Azeri . cruisercult.com

2. ROTARY POSITION SENSOR (RPS)

The rotary position sensor detects the amount of opening of the adjusting lever and forms a part of the automatic transmission system and the EGR system.
The sensor contains a type of variable resistor that varies the output voltage in accordance with the opening of the adjusting lever.

REFERENCE:
The EGR (Exhaust Gas Recirculation) system recirculates a portion of the exhaust gases through the intake in order to reduce the combustion chamber temperature and reduce the amount of NOx emissions.

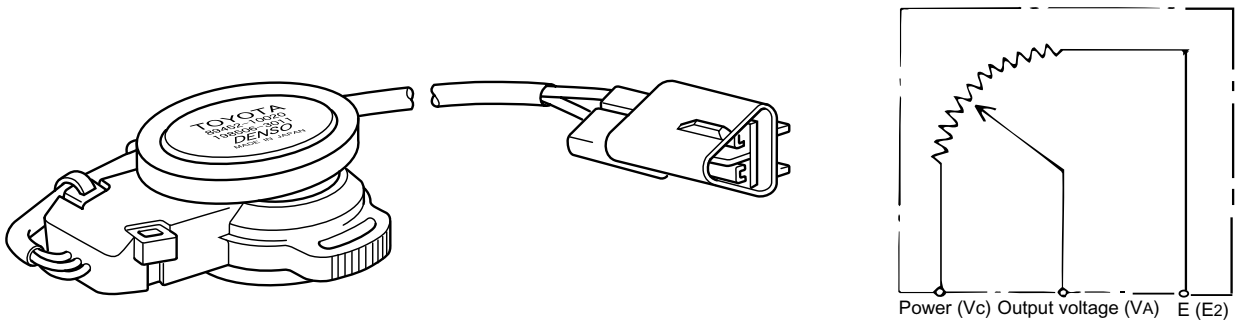

(1) External view of RPS (2) Internal circuit

PU0052 PU0053

Fig. PU0054 shows a configuration example.

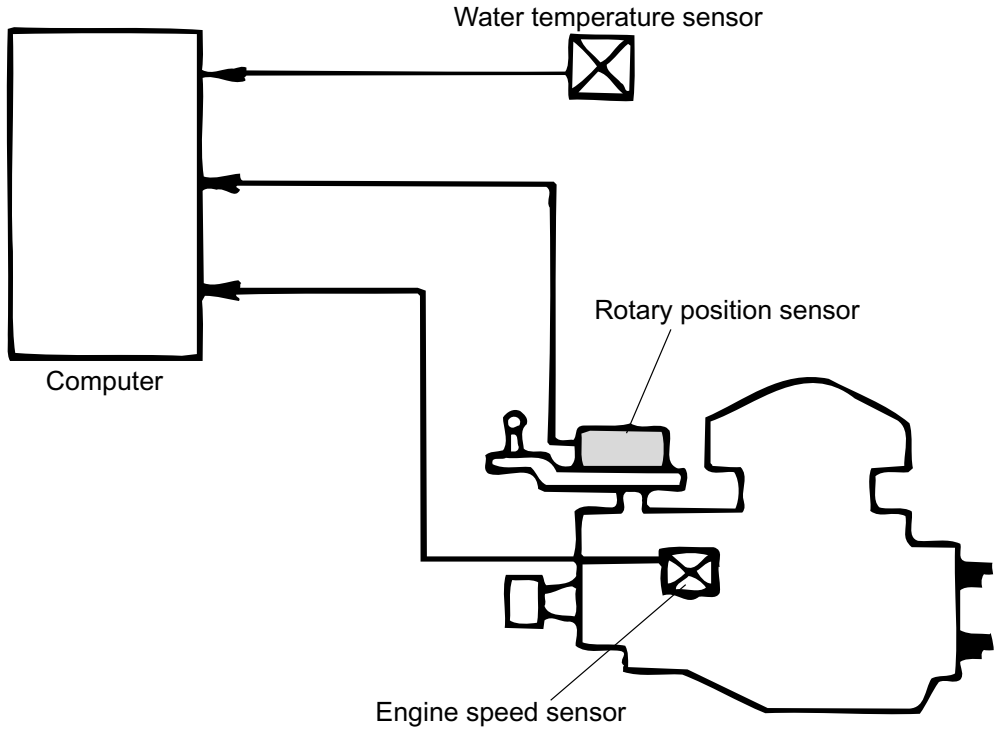

PU0054

Donated by Onur Azeri . cruisercult.com

3. BOOST COMPENSATOR (BCS)

3-1. Outline

One of the methods for increasing the power output of a diesel engine is to install a turbocharger, in the same way as on the gasoline engine. By installing a turbocharger, the engine's intake air volume increases, thus enabling the engine to combust a greater amount of fuel and generate a greater power output.

The boost compensator (or boost compensational stopper: BCS) increases the fuel delivery in accordance with the turbo boost pressure to realize optimal combustion.

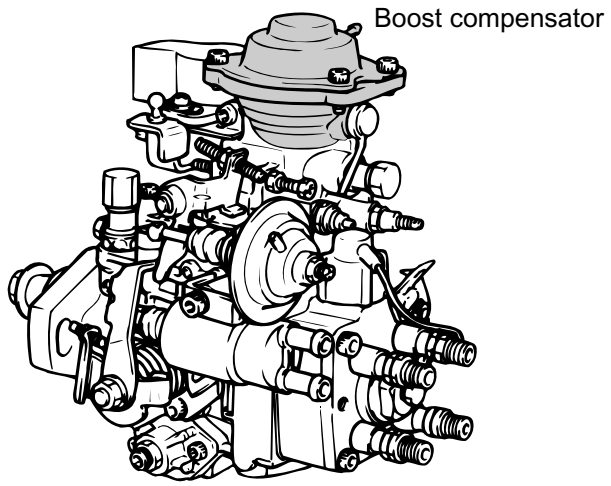

PU0055

3-2. Construction

The boost compensator is installed on top of the pump governor, and its diaphragm and pushrod are moved vertically by the turbo boost pressure (intake manifold pressure).

The pushrod has a tapered portion. This taper enables the connecting pin to move laterally, and the control arm (which acts as the stopper for the tension lever) to rotate. The amount of control arm movement is the tension lever movement, which becomes the amount of travel (fuel delivery) of the spill ring.

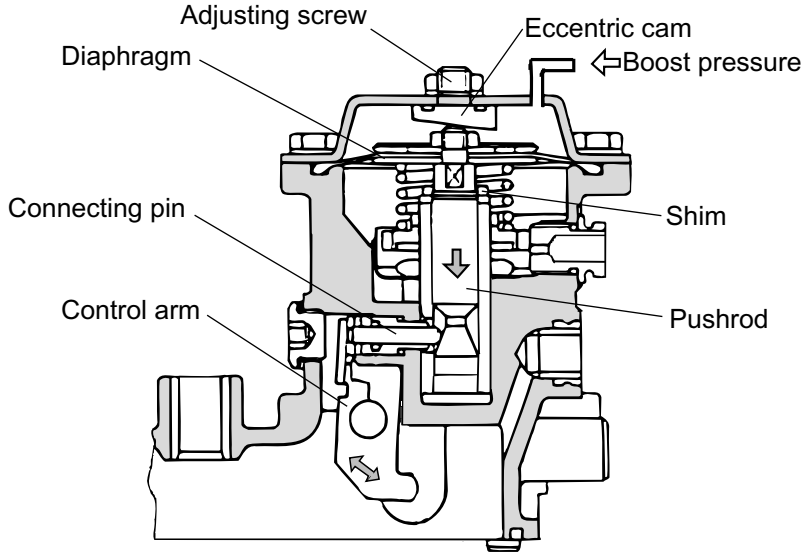

PU0056

Donated by Onur Azeri . cruisercult.com

3-3. Operation

(1) During full-load boost pressure operation (wide open throttle)

At wide open throttle, when the tension lever is in contact with the control arm stopper, the increased boost pressure pushes on the diaphragm, causing the pushrod to move downward.

As a result, the control arm stopper moves, along with the movement of the connecting pin, to the left only for the amount of the taper of the pushrod, and the tension lever rotates counterclockwise around fulcrum A, thus moving the spill ring towards the fuel delivery increase.

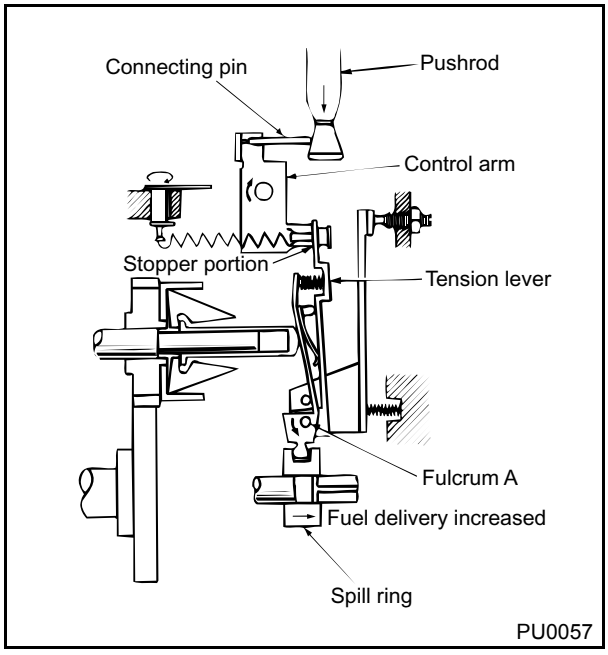

(2) Fuel delivery reduction mechanism (O.L.P) during overboost

Although a boost compensator is provided for compensating the fuel delivery in accordance with the boost pressure, this mechanism is provided with an additional fail-safe function.

When the boost pressure is below the set pressure, it operates only at the taper A of the pushrod to increase the fuel delivery in accordance with the increase in the boost pressure.

However, if the boost pressure becomes higher than the set pressure due to some problem, the diaphragm moves further downward. Then, the pushrod also moves downward, and taper B opposite taper A, via the connecting pin, moves the control arm stopper to the right. As a result, the tension lever rotates clockwise around fulcrum A, thus moving the spill ring towards the fuel delivery decrease in order to protect the engine.

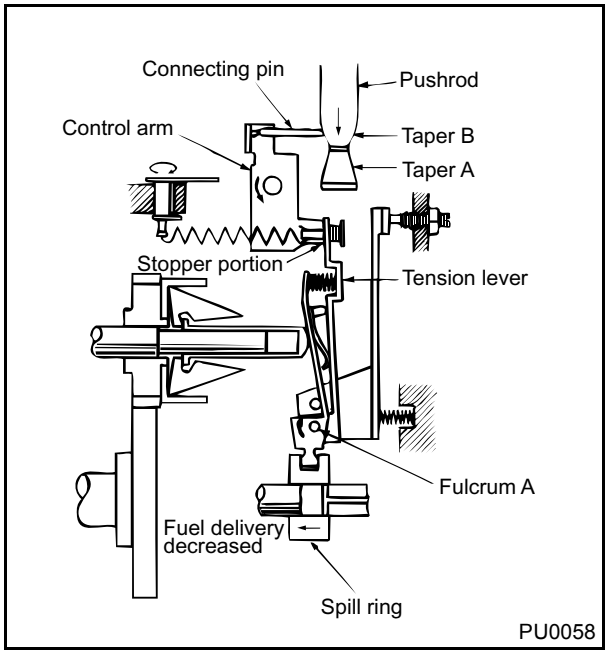

Donated by Onur Azeri . cruisercult.com

(3) Fuel delivery increase characteristics during boost

The diagram on the right shows the fuel delivery increase characteristics as a result of boost pressure. Normally, only portion A is used for the boost compensator.

Portion B, which is used when the fail-safe mechanism is activated, reduces the fuel delivery in accordance with the increase in the boost pressure.

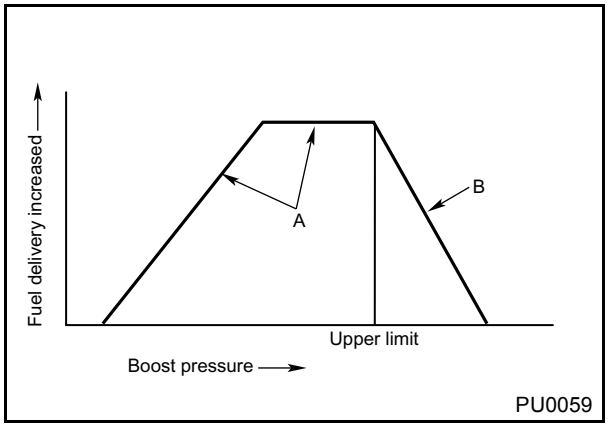

(4) Fuel delivery characteristics

The fuel delivery characteristics of a VE type pump with a boost compensator are shown in the diagram. At full load, the boost pressure rises along with the increase in the engine speed, thus increasing the fuel delivery.

The boost pressure, which is kept constant by the activation of the wastegate valve, determines the maximum fuel delivery. When the engine speed becomes higher than a predetermined rpm, the governor's maximum speed control reduces the fuel delivery, thus limiting the maximum rpm.

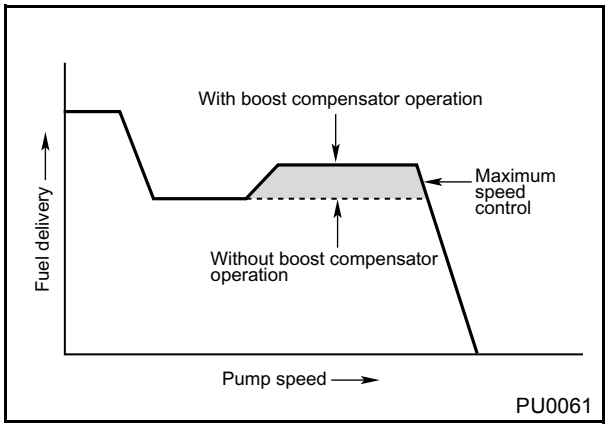

Donated by Onur Azeri . cruisercult.com

3-4. Adjustment Procedure

(1) Eccentric cam adjustment

A function of the eccentric cam is to establish the maximum ascent position of the pushrod.
Therefore, when "PB" (boost pressure) is low, while the pushrod is at its maximum ascent position, the fuel delivery varies in accordance with the rotated position of the eccentric cam.

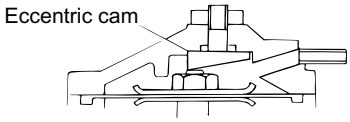

PU0060

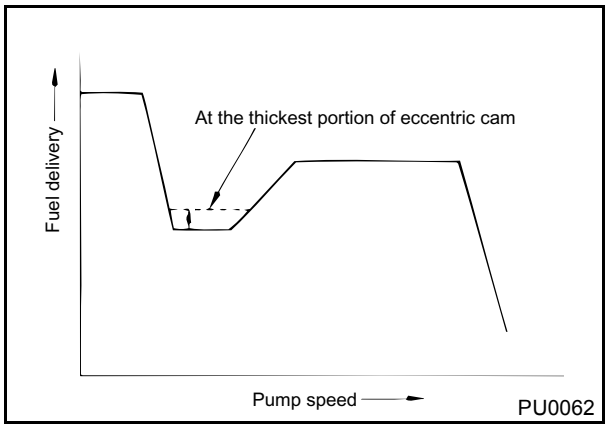

(2) Shim adjustment (only if not provided with OLP)

A function of the shims is to establish the maximum descent point of the pushrod.
Increasing the shim thickness raises the maximum descent point of the pushrod, effectively decreasing the fuel delivery B.
Conversely, decreasing the shim thickness increases the fuel delivery B.

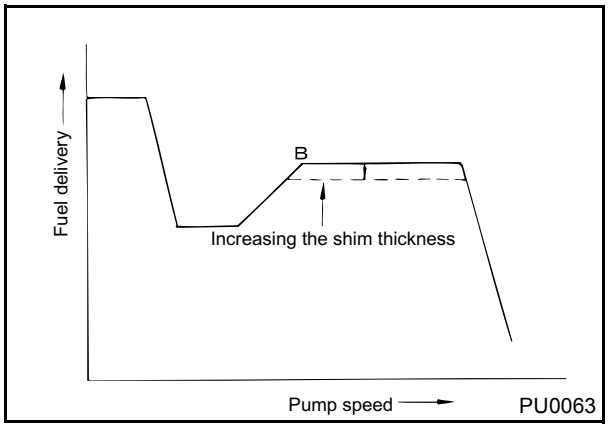

(3) Guide bushing adjustment

A function of the guide bushing is to establish, through the function of the boost compensator, the position of the fuel delivery rising point A. This is accomplished by varying the position of the lower end of the spring, enabling the diaphragm chamber pressure to overcome the spring force.
When the guide bushing is rotated counterclockwise, as viewed from above, point A moves to the right (thus delaying the rise in the fuel delivery).

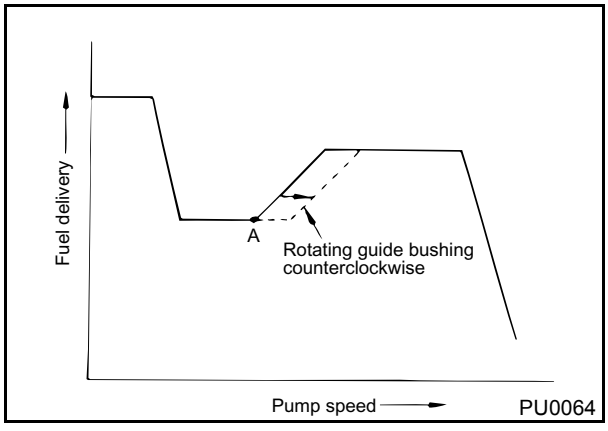

NOTE:
To adjust the guide bushing, first remove the overflow filter. Then, insert a slot screwdriver through this hole and pry on the gear to turn the bushing.

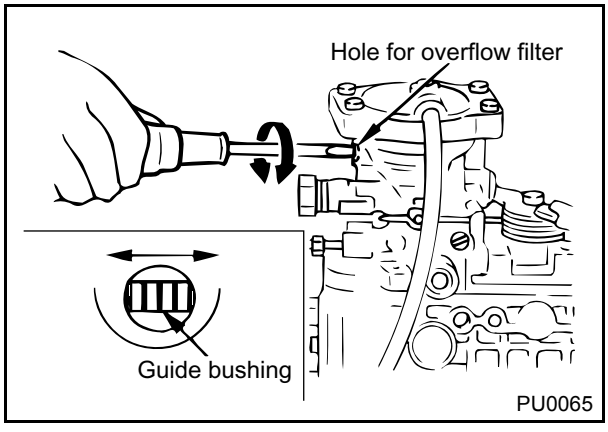

Donated by Onur Azeri . cruisercult.com

3-5. Tentative Adjustment Dimension

(1) Dimension L1

[1] Measuring Method
Measure the distance from the top end of the governor cover to the shim.

[2] Adjusting Method
Adjust by selecting a shim.

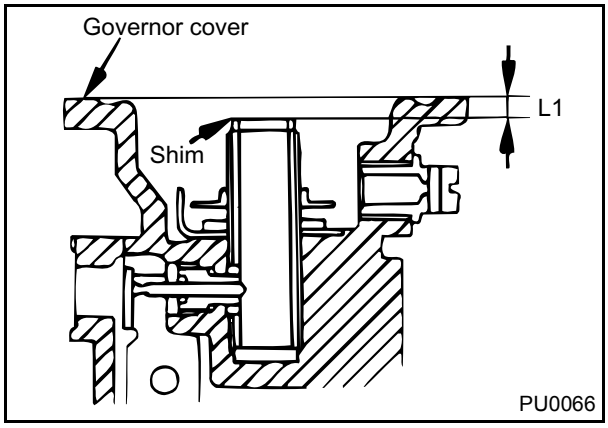

(2) Dimension L2

[1] Measuring Method
With the tip of the lever connecting pin in contact with the concave surface (taper portion) of the pushrod, measure the distance from the measuring surface of the attachment measure (STT) to the end of the control arm.

[2] Adjusting Method
Rotate the pushrod to make an adjustment.

(3) Dimension L3

[1] Measuring Method
With the pushrod pushed in all the way, measure the distance from the measuring surface of the attachment measure (STT) to the end of the control arm.

[2] Adjusting Method
Rotate the pushrod to make an adjustment.

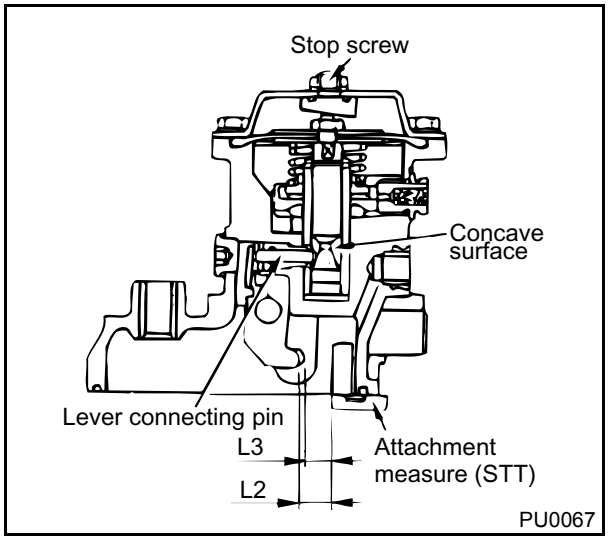

(4) Dimension L5

[1] Measuring Method
With a vacuum of 46.7kPa (350mmHg) applied, measure the distance from the measuring surface of the attachment measure (STT) to the end of the control arm.

[2] Adjusting Method
Adjust by selecting a shim for the stopper.

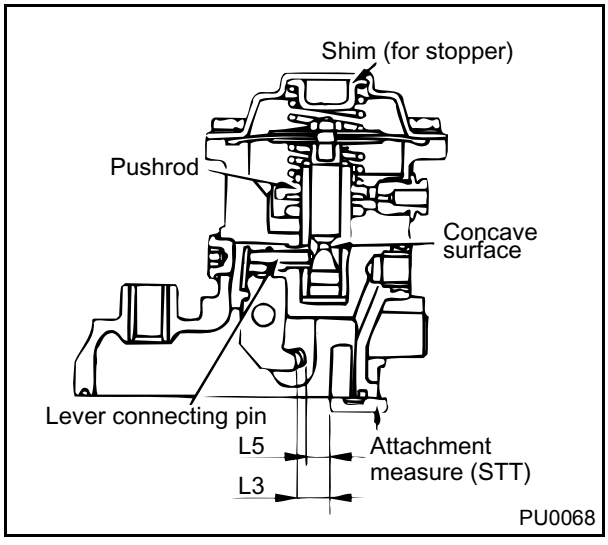

Donated by Onur Azeri . cruisercult.com

3-6. Boost & Altitude Compensator

On engines that have adopted the EGR system, there is a type of boost compensator to which not only positive pressure, but a vacuum is also applied.
Fig. PU0069 shows an example of this system.

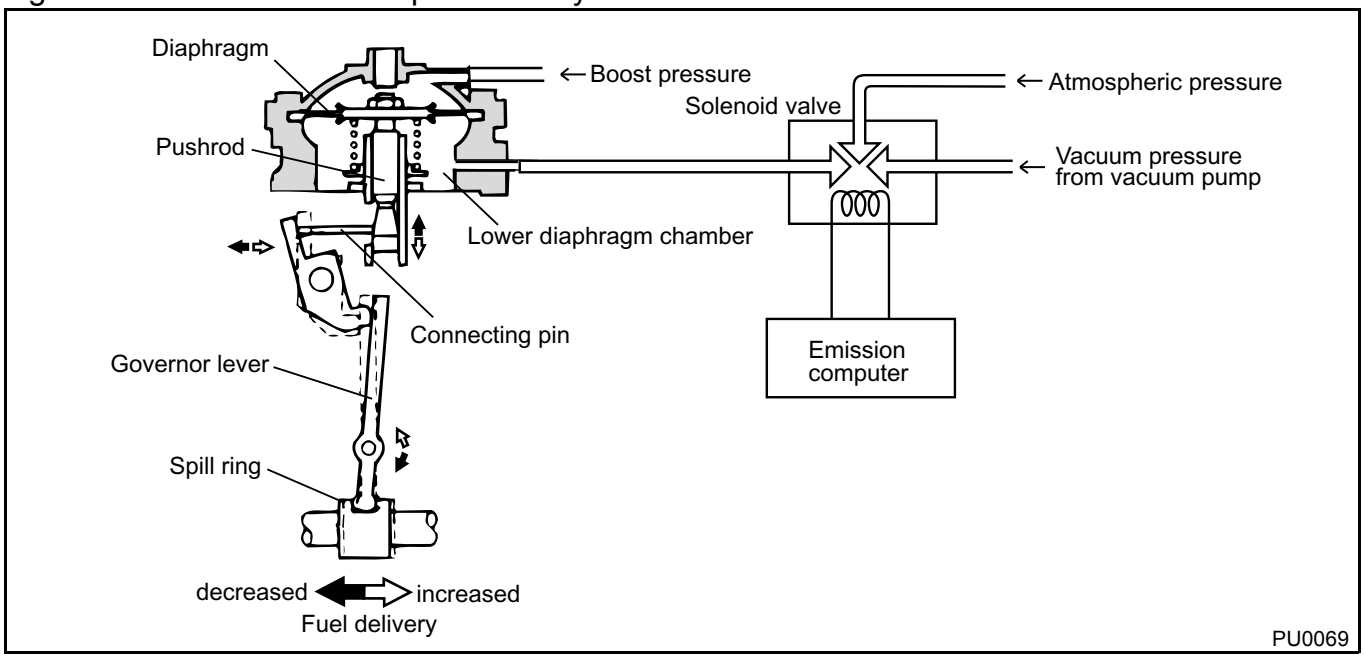

(1) Normal operation

The emission computer controls the solenoid valve in accordance with the driving conditions to regulate the amount of vacuum that is applied to the lower diaphragm chamber. At a high vacuum, the diaphragm moves downward, and this movement is transmitted via the pushrod to rotate the governor lever counterclockwise (to the position marked by the dotted lines) in order to increase the fuel delivery. Conversely, at a low vacuum, the fuel delivery is decreased. As a result, a fuel delivery that is appropriate for the driving conditions is realized, thus reducing the emission of black smoke.

(2) Operation with EGR stopped

When the EGR is stopped, the emission computer sends signals to the solenoid valve to change the vacuum to atmospheric pressure. Accordingly, atmospheric pressure is applied to the lower diaphragm chamber, thus reducing the fuel delivery. As a result, the emission of black smoke is reduced at low engine coolant temperatures, in the high-load driving range, in the low rpm range, and during deceleration.
Depending on the driving conditions, this boost compensator also effects vacuum control of the lower diaphragm chamber.

Donated by Onur Azeri . cruisercult.com

(3) Construction

This boost compensator differs from the previous boost compensator as follows:

[1] Spring added above the diaphragm

[2] Stop screw changed to adjusting shims

In Fig. PU0070, [1] and [2] are the areas that differ from the previous boost compensator.

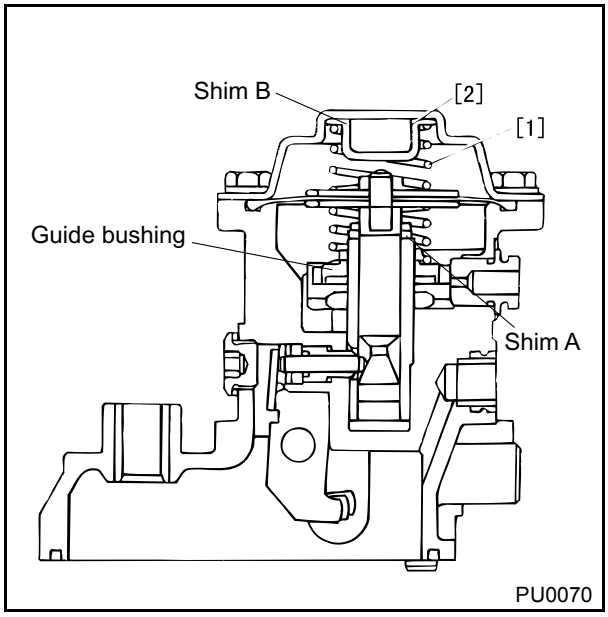

(4) BACS adjustment procedure

[1] Shim B adjustment

A function of shim B is to establish the maximum ascent position of the pushrod.

Therefore, if the pushrod is at its maximum ascent position (at a vacuum when there is sufficient boost pressure), the fuel delivery varies in accordance with the thickness of shim B.

Increasing the thickness of shim B increases the fuel delivery.

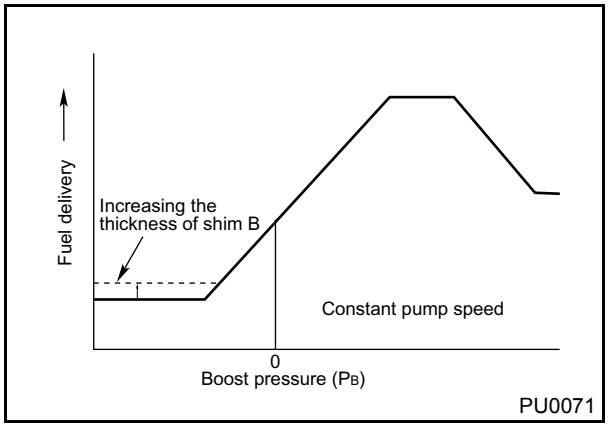

[2] Guide bushing adjustment

A function of the guide bushing is to establish the lower end of the spring. Raising the guide bushing raises the position of the lower end of the spring, which also raises the pushrod. Therefore, raising the guide bushing increases the boost pressure for discharging a given amount of fuel delivery (the maximum and minimum fuel deliveries remain unchanged).

To raise or lower the guide bushing, first remove the overflow filter. Then, insert a slot screwdriver through this hole and pry on the gear to turn the bushing.

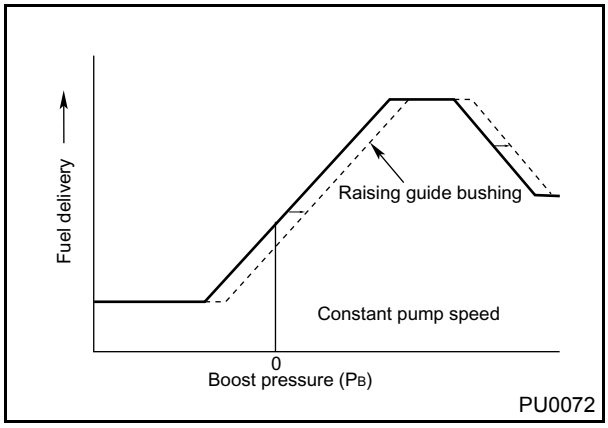

Donated by Onur Azeri . cruisercult.com

[3] Spring adjustment

A function of the spring constant of the spring is to change the slope of the fuel delivery characteristics through the function of the boost compensator.

Increasing the spring constant makes the slope gentler. However, changing the spring constant does not significantly change the fuel delivery when the boost pressure is 0kPa (0mmHg).

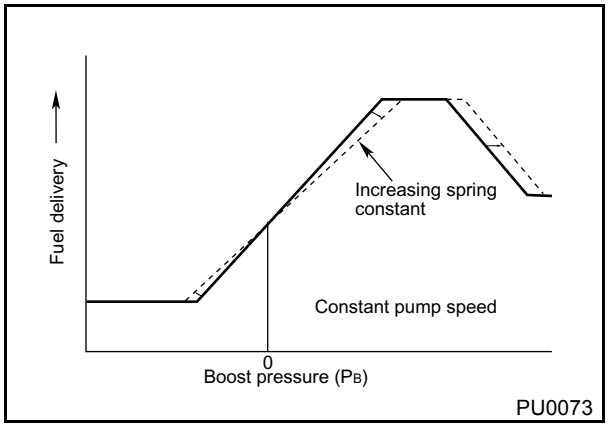

[4] Shim A adjustment

A function of shim A is to establish the maximum descent point of the pushrod.

Therefore, when the pushrod is at its maximum descent point (provided that a specified boost pressure or greater is applied), the fuel delivery changes with the thickness of shim A.

Decreasing the thickness of shim A decreases the fuel delivery.

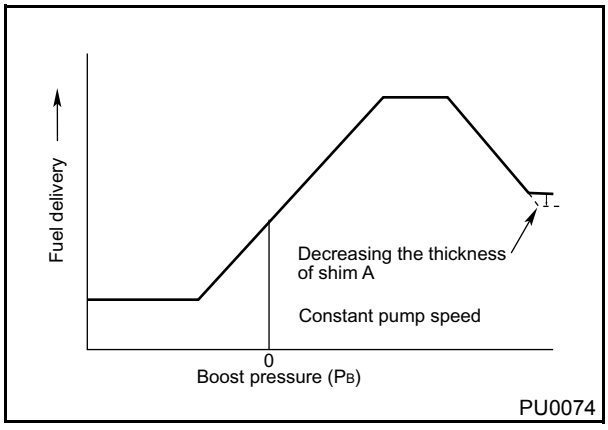

Donated by Onur Azeri . cruisercult.com

4. Diesel Altitude Compensator (DAC)

4-1. Outline

Generally speaking, the air-fuel ratio becomes leaner as the atmospheric pressure decreases at high altitudes, resulting in a higher smoke density. The diesel altitude compensator (DAC) is a device to prevent this from occurring. It automatically decreases the full-load fuel delivery in accordance with the altitude above sea level to prevent the smoke density from increasing.

4-2. Construction

The device consists of a bellows, the interior of which maintains a vacuum, a pushrod, connecting pin, control arm, etc. The bellows extends or contracts in accordance with fluctuations in the atmospheric pressure, and this movement is transmitted via the pushrod and the connecting pin to rotate the control arm.

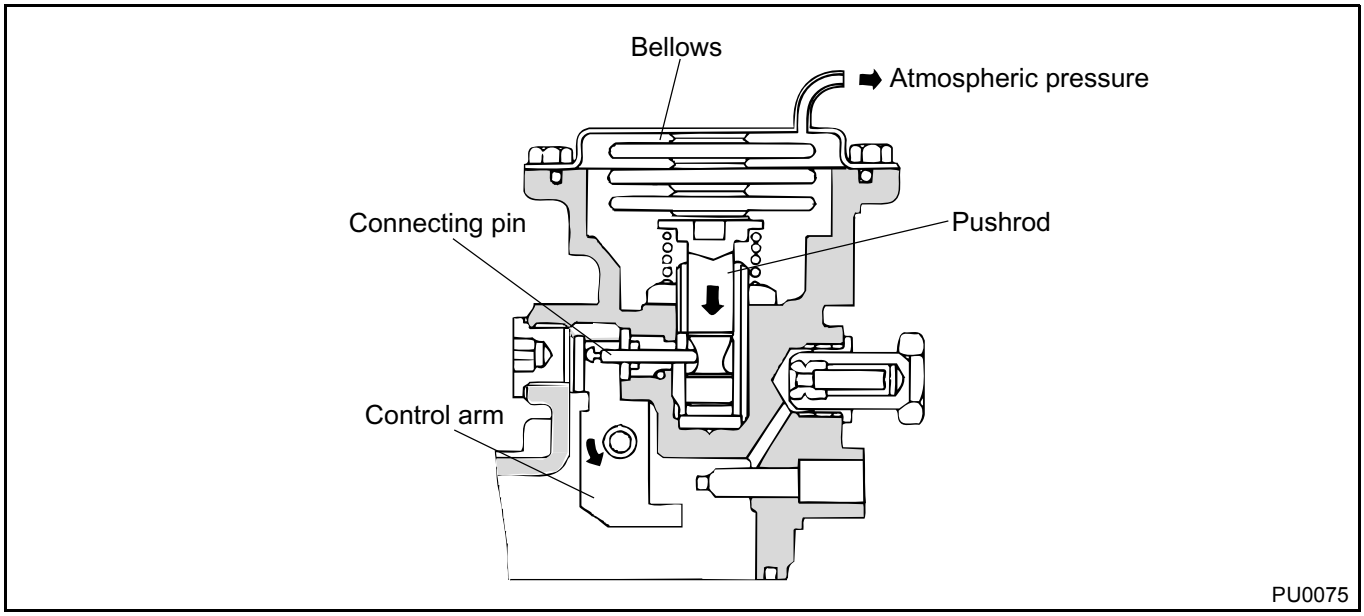

4-3. Operation

(1) Sea level operation

At sea level, the atmospheric pressure is high, and the bellows contracts to move the pushrod upward. As a result, the spill ring in the pump body is in its normal position.

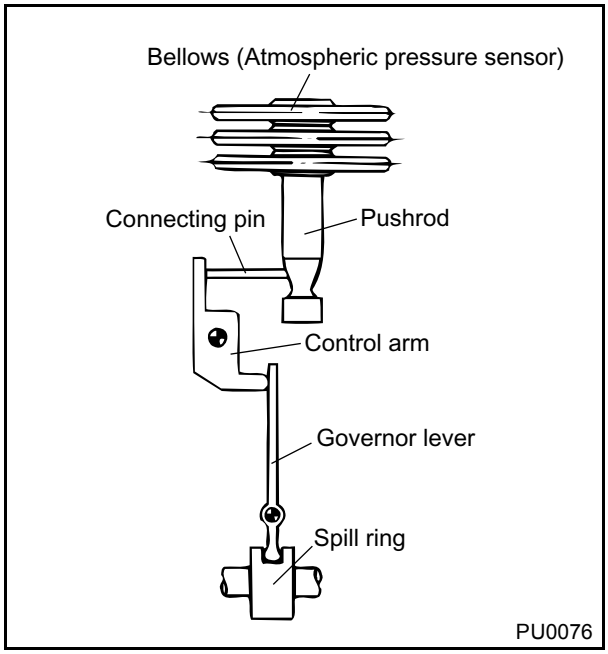

Donated by Onur Azeri . cruisercult.com

(2) High-altitude operation

As the altitude increases, the atmospheric pressure decreases, and the bellows gradually expands to move the pushrod downward. Accordingly, the lower end of the control arm moves to the right to push the spill ring in the fuel-decrease direction, thus reducing the fuel delivery.

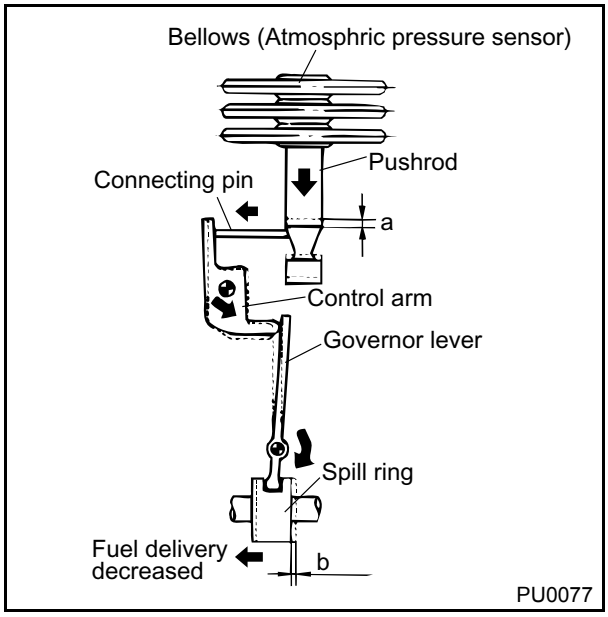

(3) Fuel delivery control characteristics

Fig. PU0078 shows the control characteristics of the diesel altitude compensator.

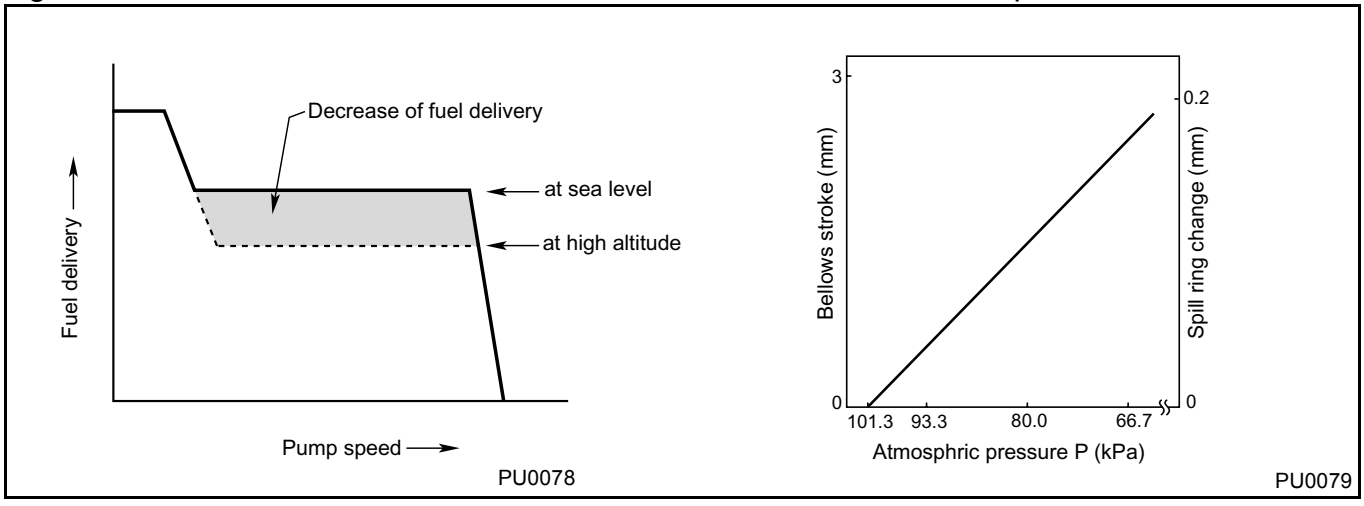

4-4. Adjustment Procedure

Change the shim to a different thickness in accordance with the fuel delivery characteristics with a vacuum applied. If it does not come within standard, replace the bellows sub-assembly.

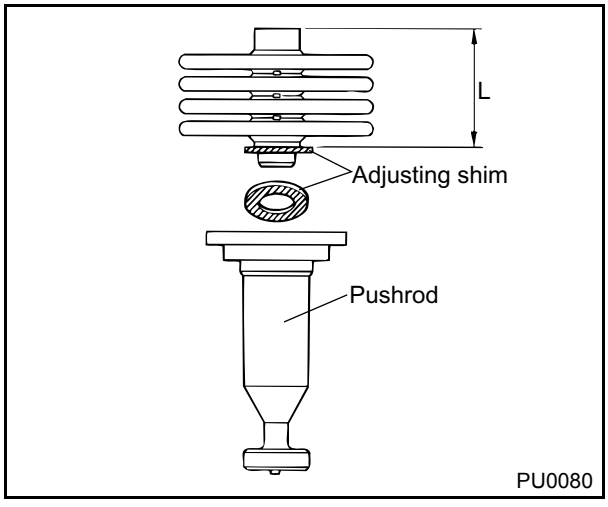

Donated by Onur Azeri . cruisercult.com

5. Dash Pot

5-1. Outline

When the engine is operating at a high acceleration rate, releasing the accelerator suddenly causes the fuel delivery to decrease (or the injection to stop) immediately, resulting in a large torque fluctuation (this symptom varies according to the engine or the vehicle on which the pump is installed). The dash pot smoothes the torque fluctuation during deceleration to enable the engine to decelerate smoothly.

In terms of fuel delivery characteristics, the dash pot starts acting when the fuel delivery becomes lower (point B) than a desired fuel delivery, as shown in Fig. PU0081. After a prescribed length of time elapses (point C), it stops acting, allowing the engine to operate at idle rpm (point D).

The dash pot body is compact (approximate overall length of 35mm) and is enclosed in the pump. It is a piston type that utilizes the fuel to operate. To enable the piston to contact the upper part of the tension lever of the governor, the dash pot is installed from the outside of the pump.

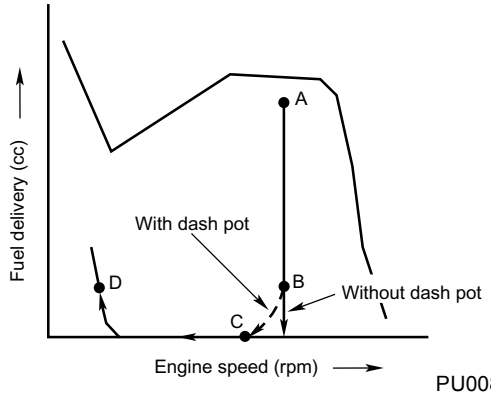

PU0081

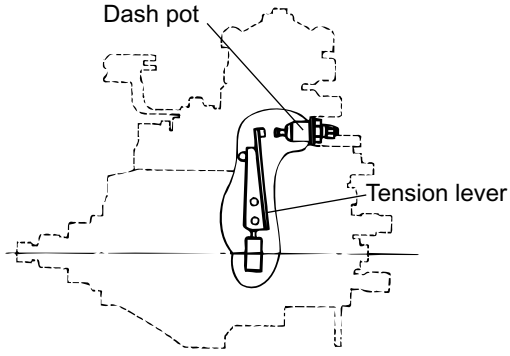

PU0082

5-2. Construction

The dash pot body contains a piston, which moves laterally as shown in Fig. PU0083. Adjusting the adjusting screw establishes the position of the piston at the left end. As the piston contains an orifice, the movement of the piston causes the fuel to go in and out between the pump chamber and the dash pot chamber through the orifice.

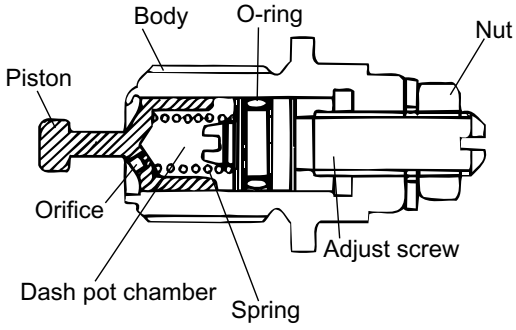

PU0083

Donated by Onur Azeri . cruisercult.com

5-3. Operation

When the adjusting lever returns suddenly from the full side to the idle position, the tension lever contacts the dash pot piston along the way. Accordingly, the tension lever and the spill ring gradually assume the idle position due to the function of the piston orifice and the spring. Consequently, the fuel delivery gradually decreases to prevent a sudden drop in the fuel delivery.

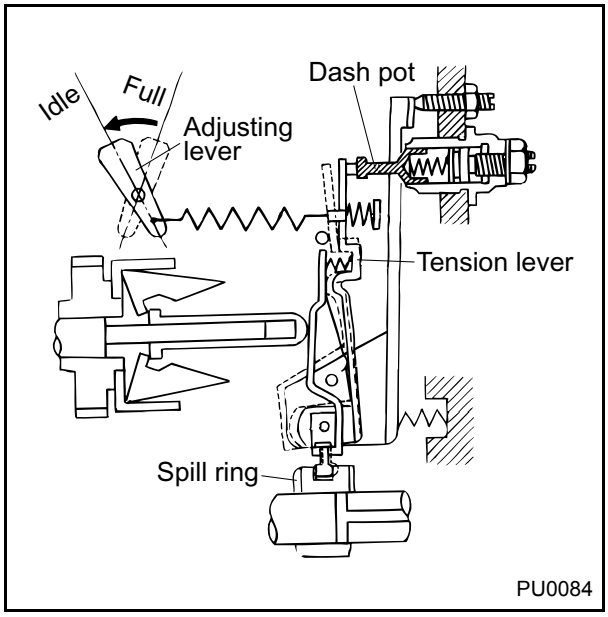

5-4. Dash Pot Maintenance (for pump part number: 096000-2390)

(1) Precautions during assembly

[1] Make sure to install the dash pot in the governor cover after installing the governor cover on the housing. If the dash pot is installed beforehand, the piston of the dash pot could become damaged while installing the governor cover.

[2] Strictly observe the tightening torque. If the dash pot is overtightened, it could cause the piston to slide improperly.

Tightening torque: 9.8 to 12.7 N•m (1 to 1.3 kgf•m)

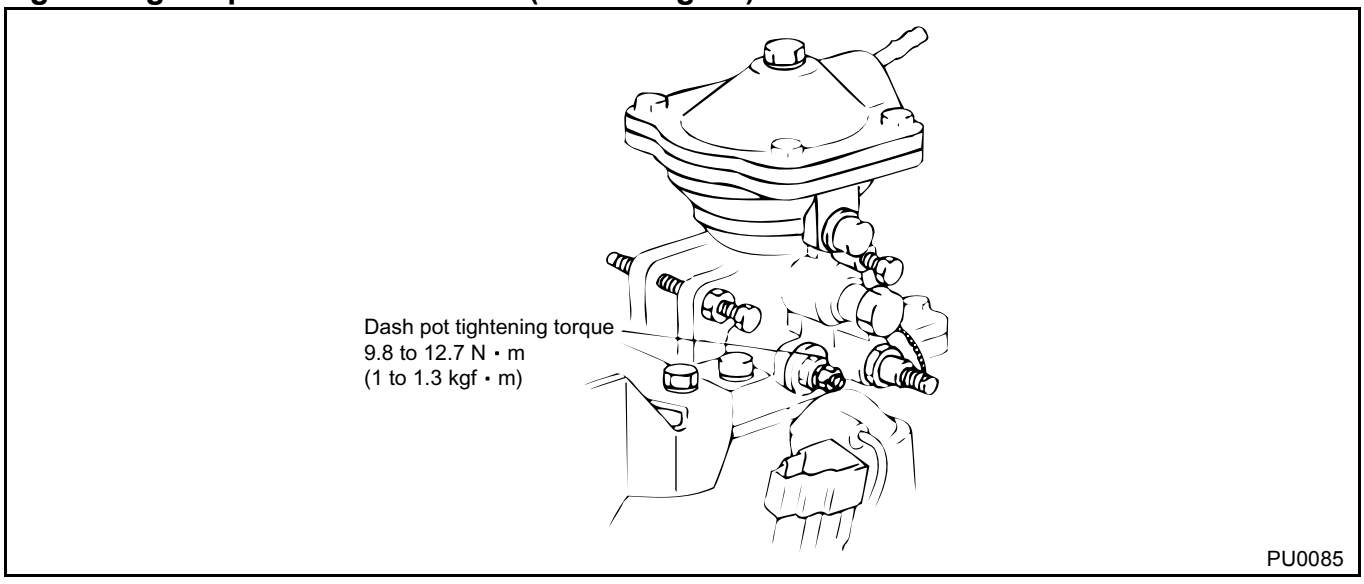

Donated by Onur Azeri . cruisercult.com

(2) Adjustment procedure

The starting of the dash pot activation is substituted by the △ q at idle, as shown in Fig. PU0086.

* The larger the △ q value, the higher will be point B in Fig. PU0081.

[1] Loosen the dash pot adjusting screw all the way to adjust the idle characteristics of the dotted line.

Q1 (tentative lever setting) → Q2 to Q3 (characteristics check) → Q2 (lever setting)

[2] Adjust the dashpot adjusting screw.

・Tighten the screw: to increase Q4

・Loosen the screw: to decrease Q4

Q4 (dash pot setting) → Q5 (verification)

[3] Set idle Q to a definite value.

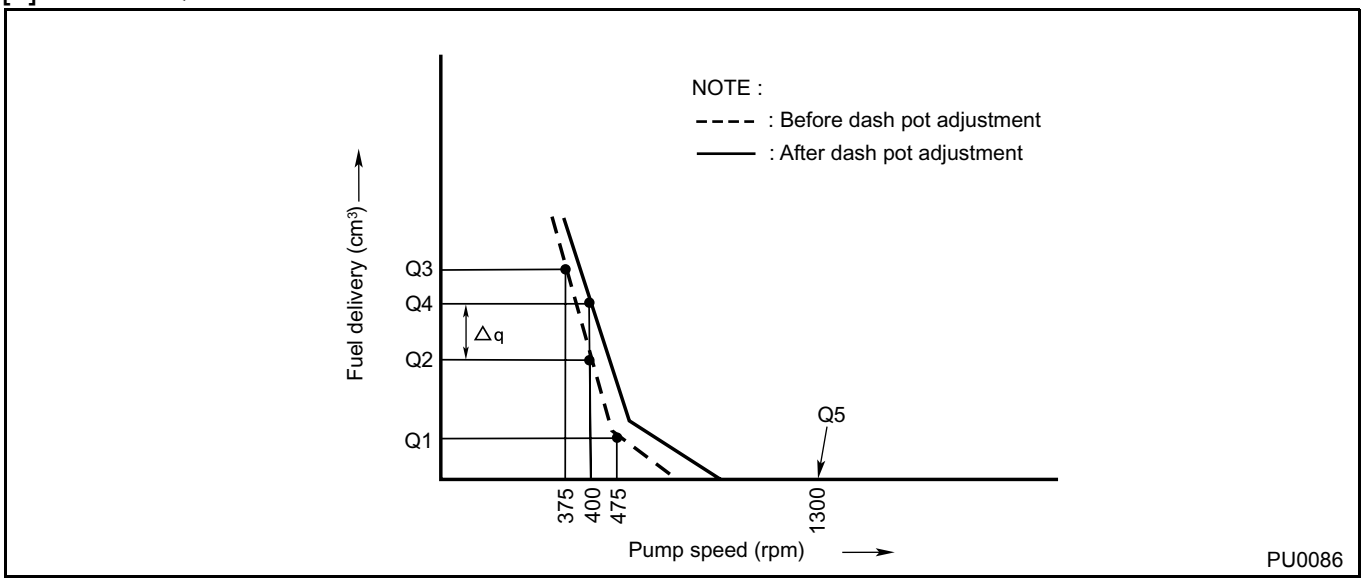

NOTE:

The △ q value is important, and it must be adjusted properly to make sure that Q4 and Q2 will be within standard.

Donated by Onur Azeri . cruisercult.com

6. Automatic Cold Start Device (ACSD)

6-1. Outline

To facilitate the starting of a cold engine, the automatic cold start device (ACSD) advances the fuel injection timing, and at the same time, increases the idle rpm to shorten the engine warm-up time.

6-2. Construction

The ACSD body contains thermowax and a piston, around which coolant circulates. The thermowax expands and contracts in accordance with the water temperature, and this movement is linked to the piston, which rotates the ACSD lever, which in turn rotates the roller ring. With the force of the return spring acting on it, the ACSD lever keeps the ACSD piston constantly in the advance (right) direction.

Another function of the ACSD is to control the idle rpm by moving the adjusting lever. The movement of the ACSD lever is transmitted to the upper lever, causing the adjusting lever to move slightly towards the full position while the ACSD is operating, in order to automatically increase the idle rpm.

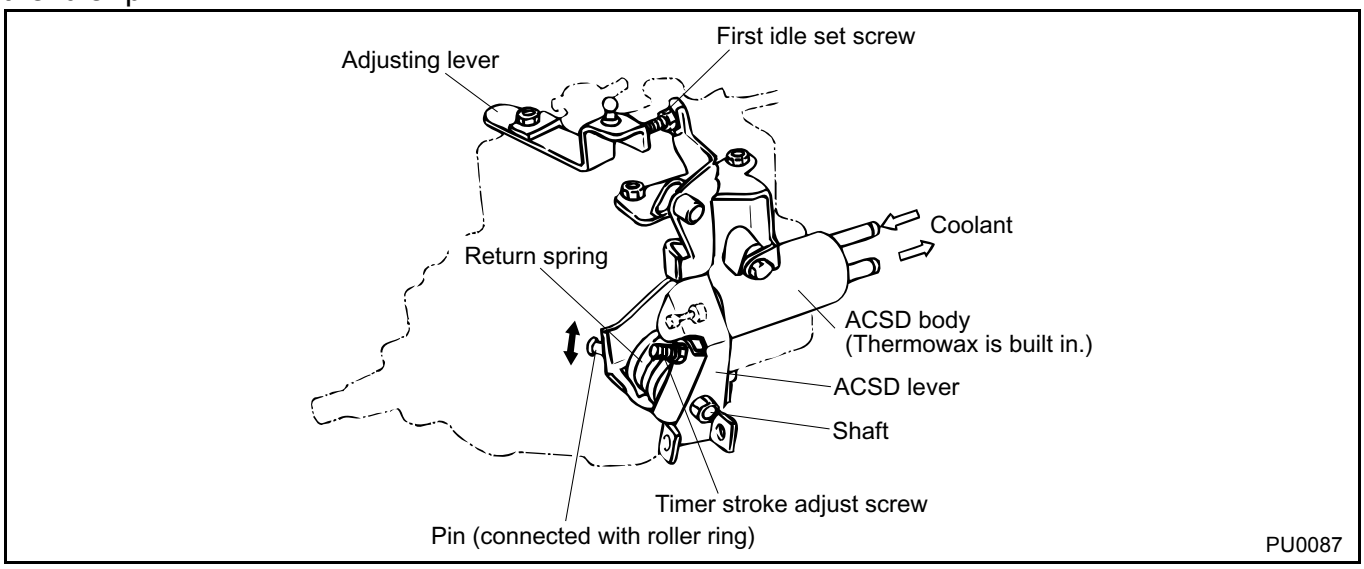

6-3. Operation

Fig. PU0088 shows an example of the temperature characteristics of the ACSD.

At temperatures below -20 ℃ , the thermowax is in the contracted state, and the maximum advance is at 3 ° (or 6 ° on the engine).

When the temperature increases above -20 ℃ , the thermowax gradually expands, causing the injection timing to move from the maximum advance closer to the normal state. This movement is completed and the timing advance is released when the temperature reaches 50 ℃ .

The movement of the adjusting lever is effected in the same manner, resulting in normal idle rpm at 40 ℃ .

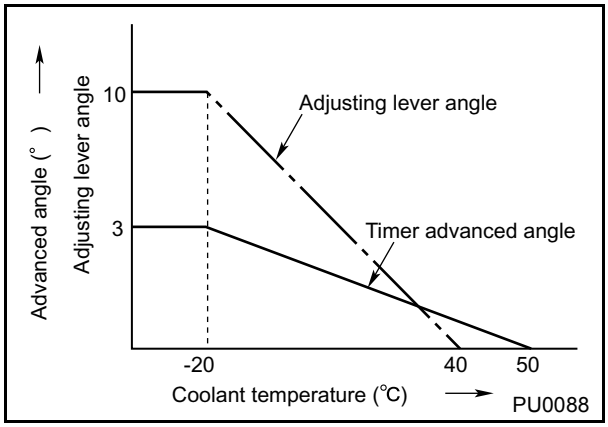

(1) ACSD operation

When the coolant temperature is below -20 ℃ , the thermowax is contracted and pulled in the advance direction (right). The force of the return spring causes the ACSD lever to rotate clockwise, and the movement of the pin at the tip of the shaft (in Fig. PU0090, it moves vertically while effecting a circular motion) forcefully pushes the roller ring to the advance side, and assumes the maximum advance position. This is to say, because the force of the return spring is far greater than the force of the timer spring, the injection timing is advanced irrespective of the force of the timer spring.

(2) ACSD canceling

When the engine is warmed by operating at high idle rpm, the coolant temperature gradually increases. In proportion to the rise in coolant temperature, the thermowax expands and counteracts the return spring by pushing the piston to the left (direction to cancel the starting advance), causing the ACSD lever to rotate counterclockwise.

At this time, because the fuel pressure in the pump chamber is low, the timer piston is moved to the right by the force of the timer spring, causing the roller ring to rotate in the advance direction. In this manner, the starting advance is canceled, and this function ends completely when the coolant temperature reaches 50 ℃ or above.

Also, the adjusting lever contacts the idle adjust screw at 40 ℃ or above, allowing the idle to return to the normal rpm.

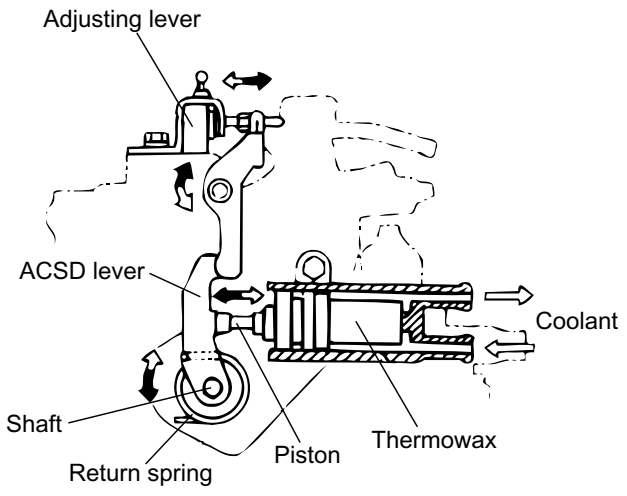

PU0089

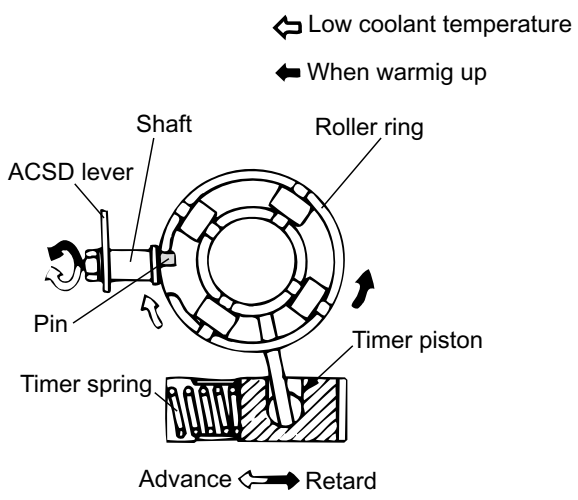

PU0090

Donated by Onur Azeri . cruisercult.com

(3) Timer operation after ACSD canceling

When the coolant temperature is 50 ℃ or above, the starting advance device is completely canceled and the engine returns to the normal operating state. This is to say, the contact of the pin and the roller ring is disrupted, enabling the balance between the pump chamber pressure and the timer spring force to move the roller ring.

In the characteristics line diagram in Fig. PU0091, if the coolant temperature is below -20 ℃ , the maximum starting advance angle is 3 ° . Thus, when the pump rpm becomes greater than N2, the pump chamber pressure overcomes the setting force of the piston spring, allowing the automatic advance characteristics of the normal line diagram to take over.

When the coolant temperature is 10 ℃ , the thermowax expands slightly as shown in the diagram on the right. This causes the advance angle to decrease and the function of the ACSD is canceled when the pump speed becomes higher than the N1 rpm.

Fig. PU0091 makes it evident that the movement of the starting advance device is discontinued after the coolant temperature is 50 ℃ or above, as described above.

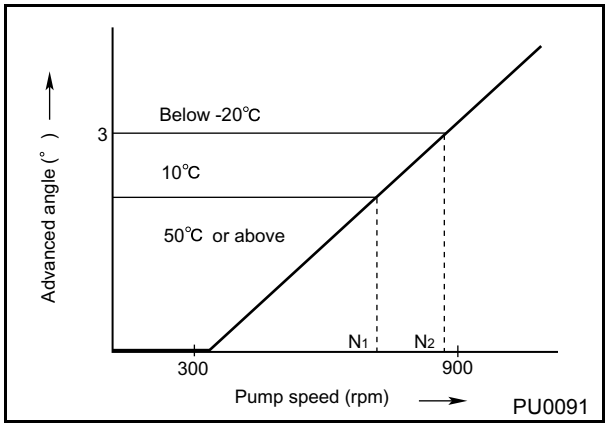

Donated by Onur Azeri . cruisercult.com

6-4. ACSD Disassembly and Reassembly

(1) Disassembly

[1] Hold the ACSD body on a vise, and remove the nut while keeping the return spring guide pressed with needle-nose pliers. Then, take out the adjusting lever, return spring guide, inner and outer return springs, and the adjusting lever shaft.

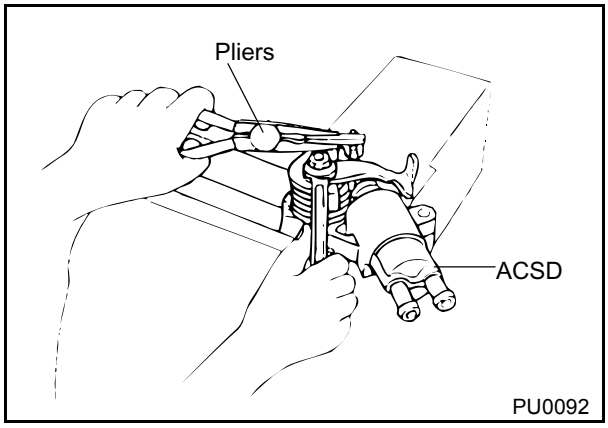

NOTE:
Make sure to keep the return spring guide firmly pressed so that the nut does not pop out from the force of the return spring while removing the nut.

[2] Remove the circlip.

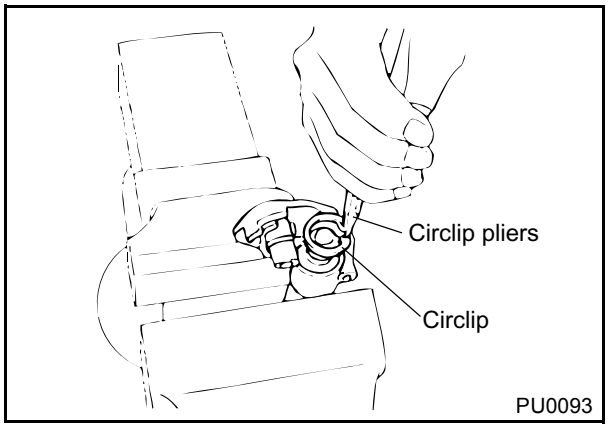

[3] Cover the timer cover with a shop cloth, and plug one of the coolant inlets with your finger. Apply compressed air into the other inlet to remove the thermo element.

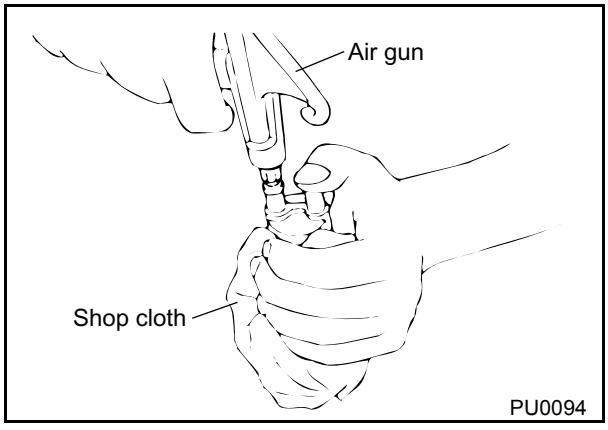

NOTE:
Make sure to securely cover the timer cover with a shop cloth to prevent the thermo element from popping out.

Donated by Onur Azeri . cruisercult.com

(2) Reassembly

[1] Replace the O-ring of the thermo element and the O-ring of the adjusting lever shaft. Apply diesel fuel on the O-ring before assembly.

NOTE:
Do not reuse the O-rings.

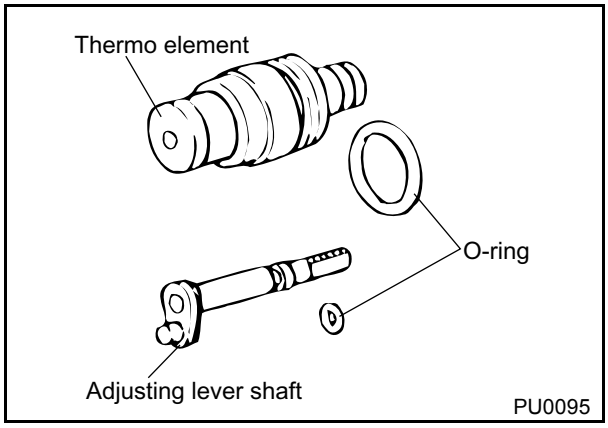

NOTE:
If the supplied thermo element comes equipped with a jig, use a vise as shown in Fig. PU0096, apply a load from above, and remove the thermo element from the jig.

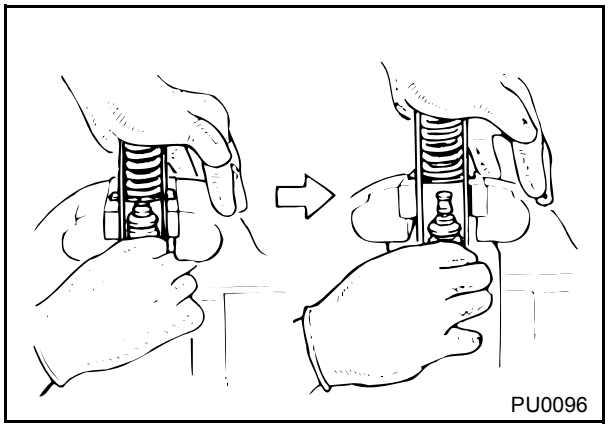

Donated by Onur Azeri . cruisercult.com

[2] Reassemble in the reverse order of disassembly.

NOTE:
Carefully observe the installed direction of the adjusting lever shaft and the hooked position of the return spring. These positions must be checked before disassembly.

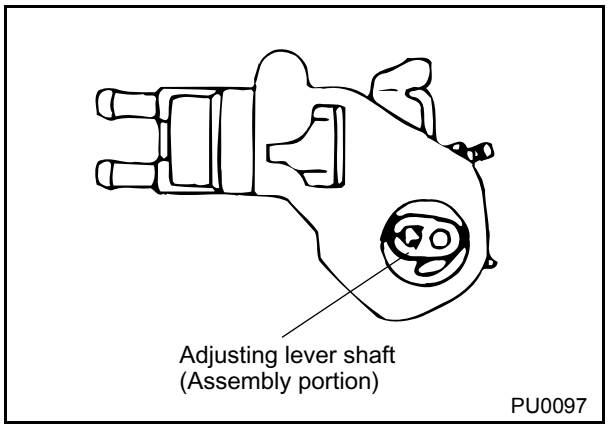

[3] Tighten the nut of the adjusting lever shaft (tighten it to the final torque after the adjustment has been completed).

Tightening torque: 11.8 to 15.6 N•m (1.2 to 1.6 kgf•m)
: 24.5 to 29.4 N•m (2.5 to 3.0 kgf•m)
* Pump for 1HD-FT and 14B engines

[4] Tighten the nuts of the adjusting screws (tighten them to the final torque after the adjustment has been completed).

Tightening torque: 4.0 to 5.8 N•m (0.4 to 0.6 kgf•m)
[5] Verify that the adjusting lever moves smoothly.

7. Manual Cold Start Device (MCSD)

7-1. Outline

Similar to the ACSD, the manual cold start device (MCSD) advances the fuel injection timing to facilitate the starting of a cold engine, and at the same time, increases the idle rpm to shorten the engine warm-up time. It differs from the ACSD in that the MCSD must be operated manually by the driver.

7-2. Construction and Operation

When the MCSD lever is manually turned, the cam at the end of the shaft causes the roller ring to rotate in the opposite direction of the pump rotation. As a result, the lifting of the face cam is quickened, thus advancing the injection timing by approximately 2.5 °. The advance angle can be set as desired by changing the θ value.

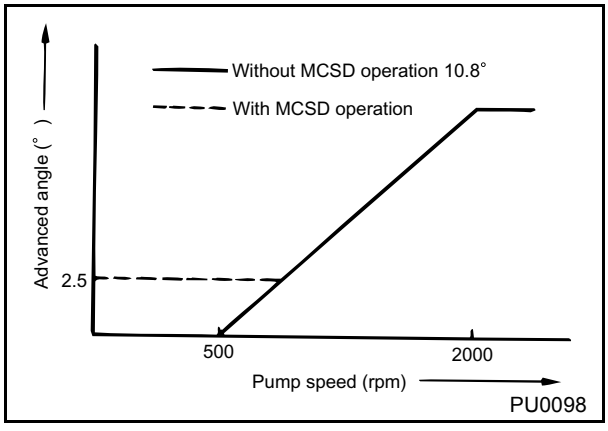

Donated by Onur Azeri . cruisercult.com

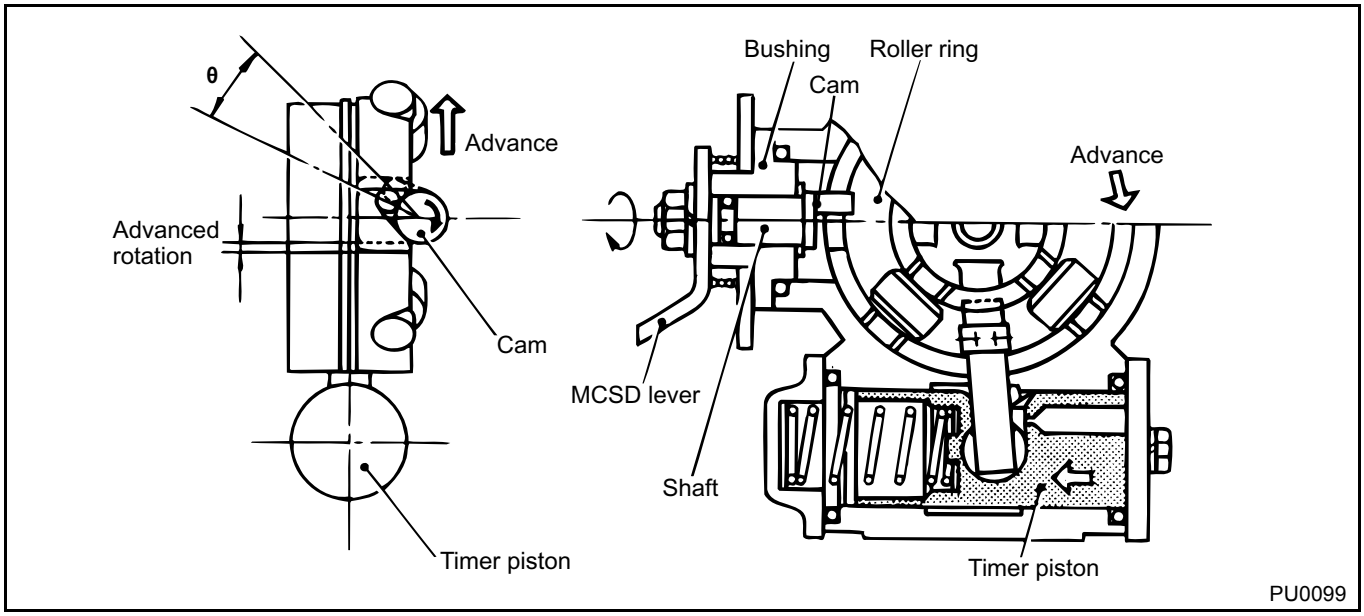

REFERENCE:
The MCSD is operated by pulling the lever [A] located at the driver's seat as shown in Fig. PU0100. In the event that the face cam is in the midst of lifting, and the operating torque of the MCSD is heavier than normal, the spring (B) stretches.
When the engine starts to crank, because the operating torque decreases, the MCSD is operated by the power of the stretched spring.

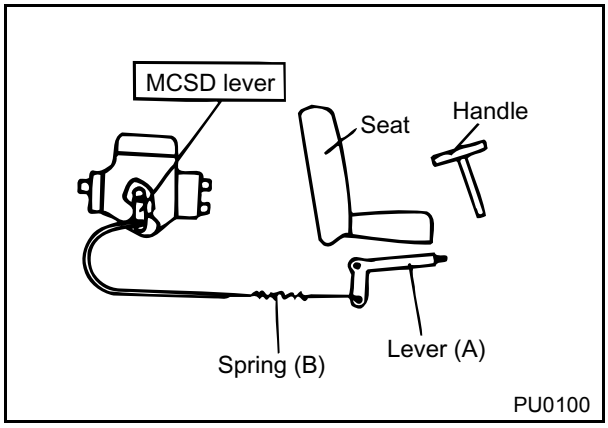

Donated by Onur Azeri . cruisercult.com

8. Load Sensing Timer (LST)

8-1. Outline

The load sensing timer (LST) controls the fuel pressure in the pump chamber in accordance with the engine load, in order to provide timer advance characteristics that are appropriate for the engine load. Thus, under light-load driving conditions (during which the fuel delivery is decreased), the amount of timer advance is reduced to ensure a quieter operation by reducing the diesel knocking sound. Under high-load driving conditions (during which the fuel delivery is increased), the amount of timer advance is increased to prevent the power output from decreasing and the fuel consumption rate from increasing.

8-2. Operation

When the fuel delivery decreases, the fuel pressure in the pump chamber, which provides the force to operate the timer, is reduced in order to decrease the amount of advance.
When the governor sleeve is pushed by the weight, the sleeve orifice lines up with the groove of the governor shaft as shown in the diagram below. Then, the fuel in the pump chamber travels through the hole in the governor shaft to the intake side of the feed pump, causing the fuel pressure to drop. As a result, the timer piston is returned to the retard side by the force of the timer spring.

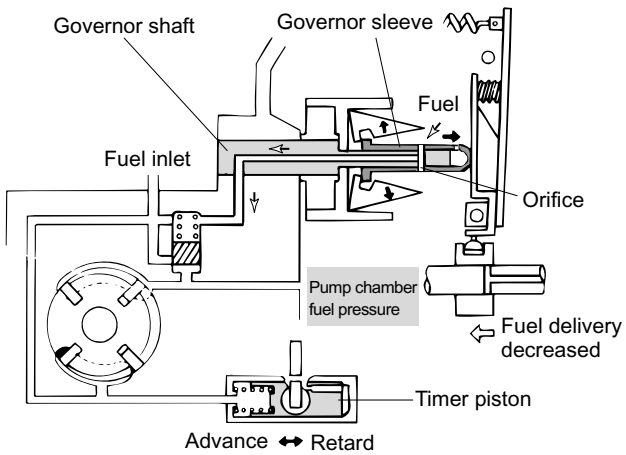

PU0101

As shown in Fig. PU0102, the operating range of the load sensing timer is approximately between 25 to 75% of the engine load. The amount of maximum advance is determined by the size of the orifice in the governor sleeve and the spring constant of the timer spring. Thus, the LST controls the injection timing in accordance with the engine load.

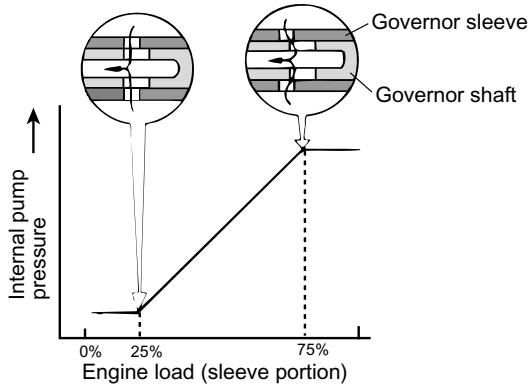

PU0102

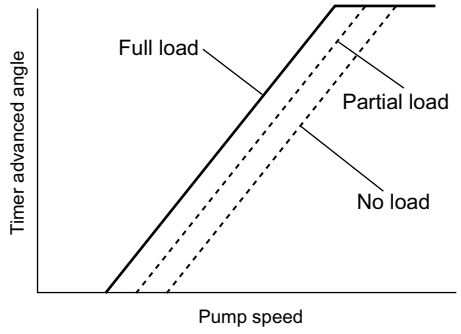

PU0103

Donated by Onur Azeri . cruisercult.com

9. Power Control System (PCS)

9-1. Outline

The power control system (PCS) has been adopted on certain injection pumps that are used on engines with a large maximum torque. This system restrains the engine torque by decreasing the fuel delivery in 1st and reverse gears when the drive force is greater, in order to ensure the reliability of the drivetrain (including the transmission and differential).

When the vehicle is being driven in 1st or reverse, the PCS switch is turned OFF, allowing the atmospheric pressure to act on the actuator via the solenoid valve. In other gears, the PCS switch is turned ON, allowing a vacuum to act on the actuator via the solenoid valve.

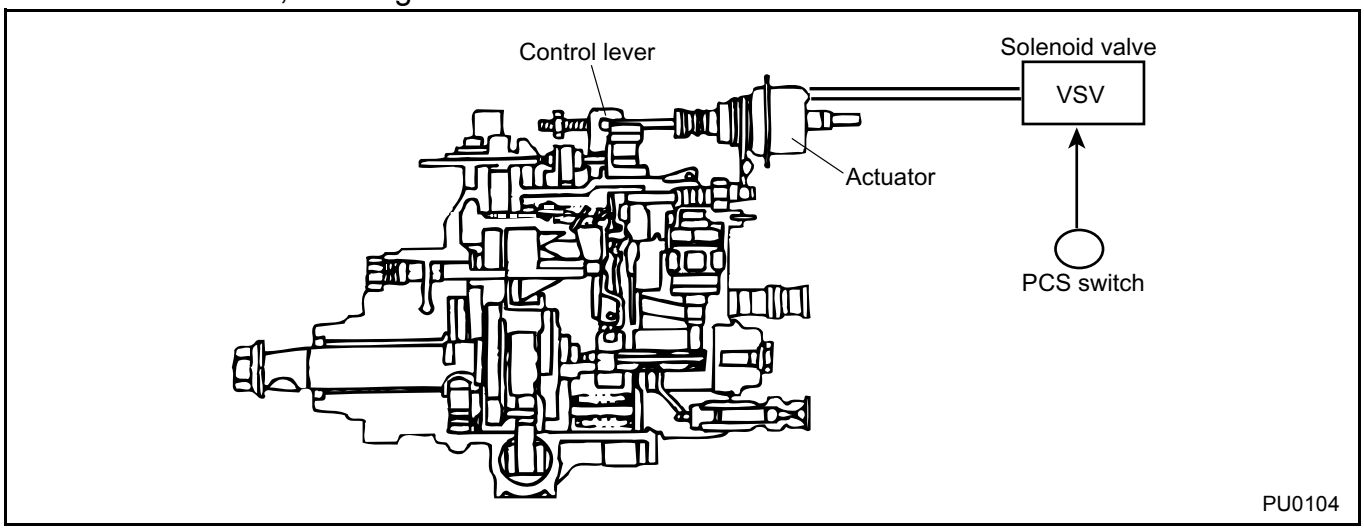

9-2. Construction

The actuator rod moves in accordance with changes in the vacuum that is applied to the actuator. This movement is transmitted via the power control lever to rotate the throttle lever, which changes the position of the tension lever. While the vehicle is being driven in 1st or reverse, the spill ring moves in the fuel-decrease direction to reduce the fuel delivery (the construction of the ring varies from model to model).

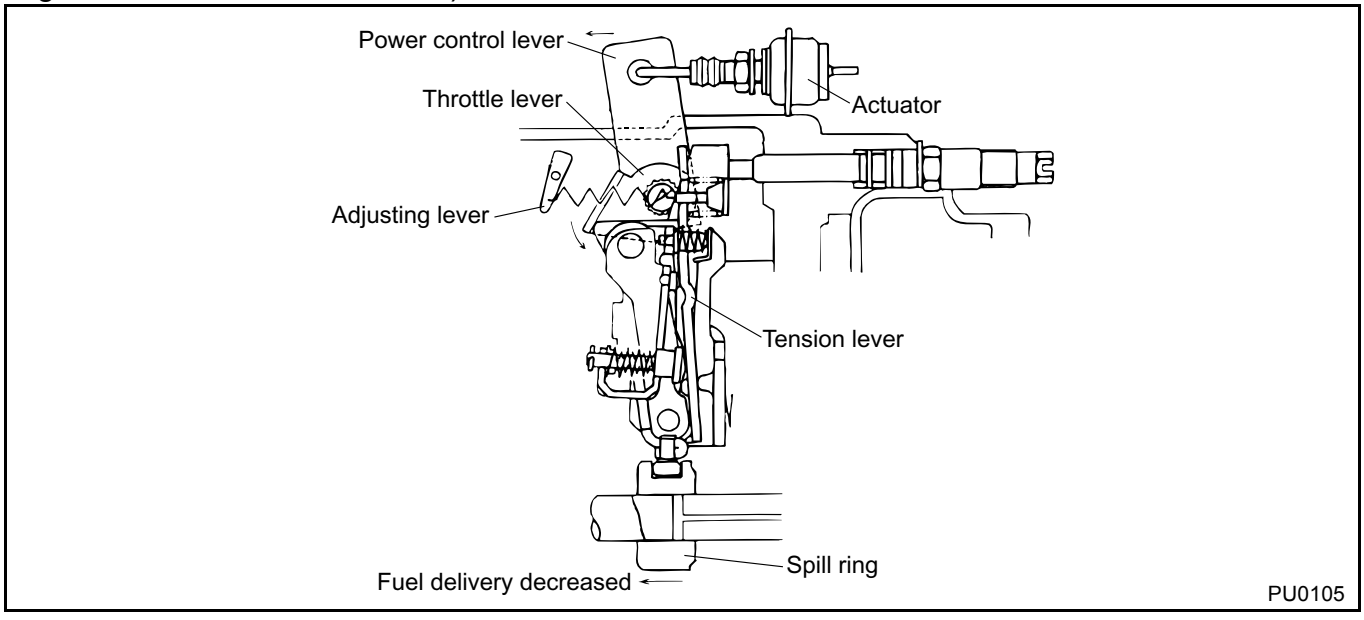

Donated by Onur Azeri . cruisercult.com

9-3. Operation (specimen drawing)

(1) Operation other than in 1st or reverse

The PCS switch is turned ON, and a vacuum is applied to the actuator via the solenoid valve. At this time, the actuator rod is being pulled, and the throttle lever is in the position shown in Fig. PU0106 (to make it easier to understand, the power control lever and the throttle lever are considered to be a single piece, and are called a "throttle lever" hereafter).

Then, when the adjusting lever is moved to the full position, the tension lever moves to the position in which it contacts the stopper, thus producing the normal full-load fuel delivery.

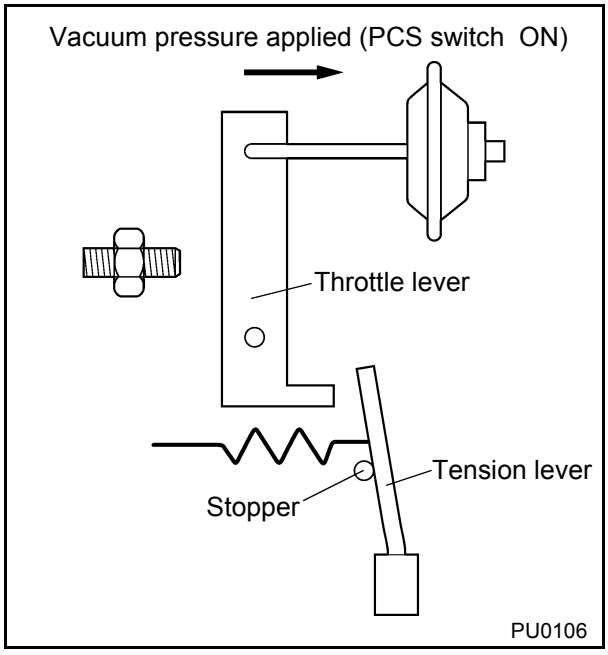

(2) Operation in 1st or reverse

The PCS switch is turned OFF, and the atmospheric pressure is applied to the actuator via the solenoid valve. At this time, because the actuator rod is pushed out, the throttle lever moves to the position shown in Fig. PU0107.

As a result, even if the adjusting lever is moved to the full position, the tension lever would move only until it contacts the throttle lever, thus reducing the full-load fuel delivery.

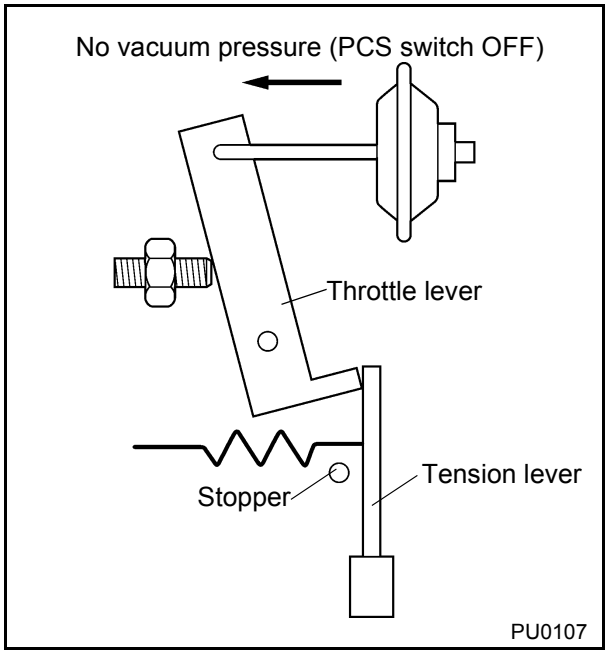

Donated by Onur Azeri . cruisercult.com

10. Pilot Injection Device (PIJ)

10-1. Outline

The purpose of the pilot injection device (hereafter called "PIJ") is to minimize the engine noise during idle and to reduce NOx emissions.

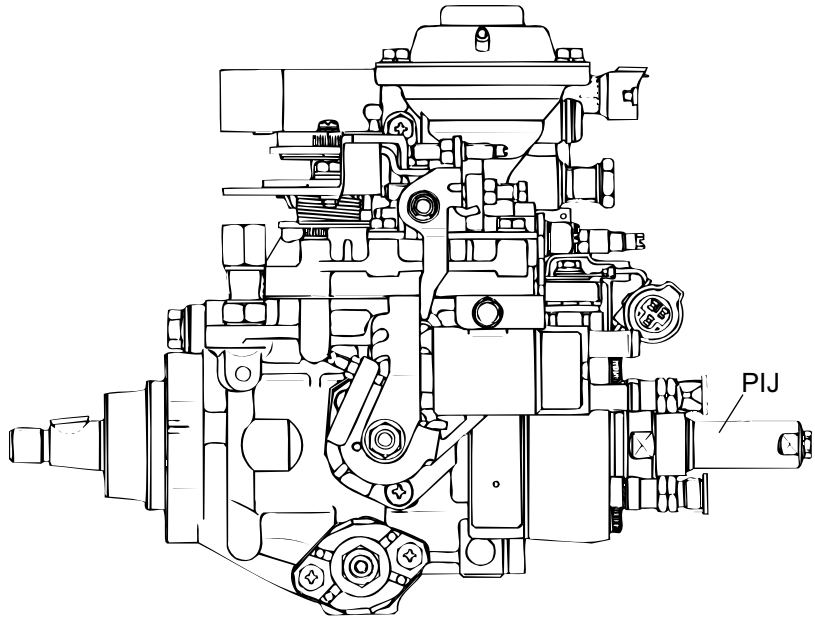

PU0108

10-2. Construction

The basic construction of the PIJ is similar to the nozzle and nozzle holder.

When the pressure of the high-pressure fuel exceeds the PIJ valve-opening pressure, the accumulator piston ascends. Then, the leaked fuel returns to the pump body via the passage.

The valve-opening pressure of the PIJ is adjusted by changing the shim to vary the spring set load.

PIJ valve-opening pressure: 12.3 ± 0.2MPa (125 ± 2 kgf/cm²)

The stopper prevents the pressure pin from popping out, and the gap "a" between the stopper and the pressure pin is adjusted by changing the shim.

Gap "a" varies according to the marking on the shim.

Marking	Gap "a" (mm)
0011	1.1 ± 0.05
0020	0.2 ± 0.05
0030	$0.375^{+0.1}_{-0.05}$
0040	$0.375^{+0.1}_{-0.2}$

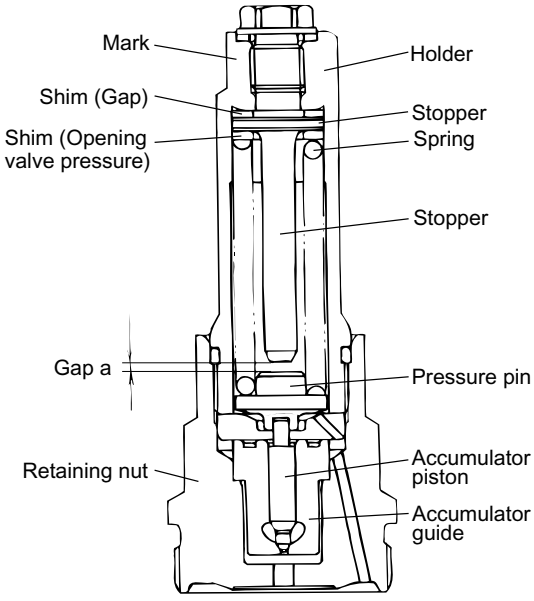

PU0109

Donated by Onur Azeri . cruisercult.com

10-3. Operation

(1) Pilot injection

As the plunger lifts, the pressure (P_f) in the steel injection pipe becomes greater than the nozzle valve-opening pressure (P_0), enabling pilot injection. However, the pressure (P_1) in the high-pressure chamber becomes lower than the PIJ valve-opening pressure (P_2).

$P_f > P_0$; $P_1 < P_2$

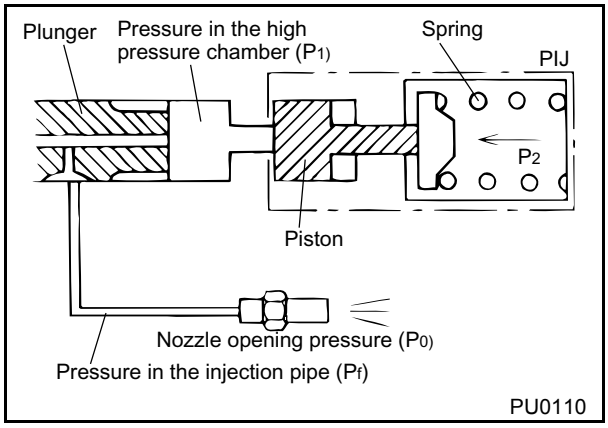

(2) Non-injection period

As the plunger lifts further, and the pressure (P_1) in the high-pressure chamber becomes higher than the PIJ valve-opening pressure (P_2), the PIJ opens, and the fuel capacity increases for the amount accumulated (△ V). The increase in capacity causes the pressure in the steel injection pipe (P_f) to become lower than the nozzle valve-opening pressure (P_C), enabling the pilot injection to end.

$P_f < P_0$; $P_1 > P_2$

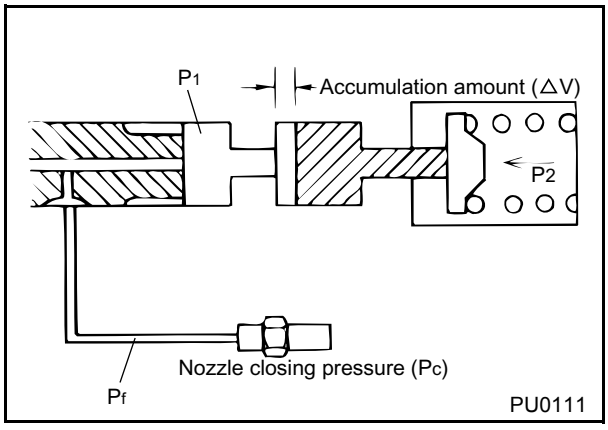

(3) Main injection

As the plunger lifts even further, the pressure (P_f) in the steel injection pipe rises and becomes higher than the nozzle valve-opening pressure (P_0) again, enabling the main injection to start.

$P_f > P_0$; $P_1 > P_2$

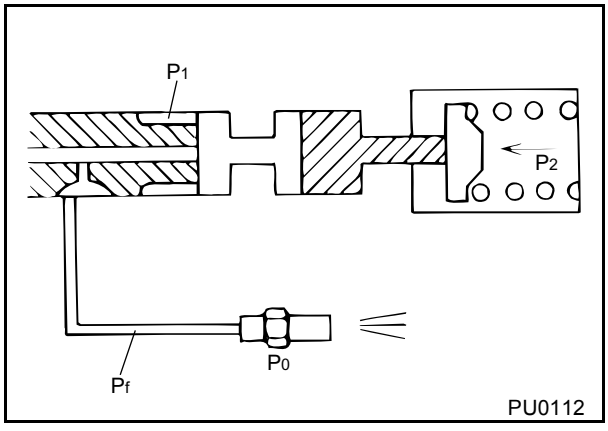

(4) Injection ending

As the spill port of the plunger opens and the high-pressure fuel in the plunger returns to the pump, both the pressure in the steel injection pipe (P_f) and the pressure in the high-pressure chamber (P_1) become lower. Thus, the injection ends and the PIJ also closes.

$P_f < P_0$; $P_1 < P_2$

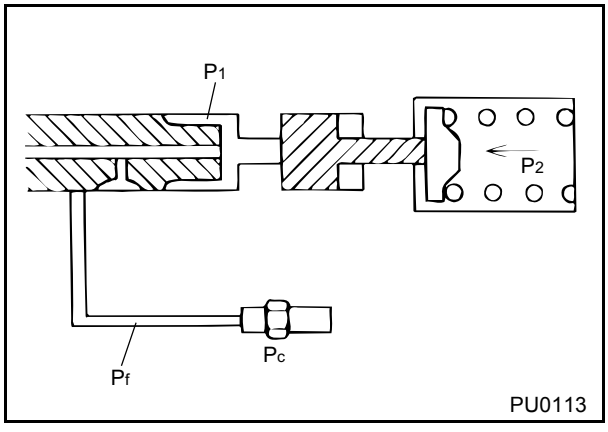

Donated by Onur Azeri . cruisercult.com

10-4. Characteristics

The diagram on the right shows the injection characteristics with and without the PIJ. Factors that influence the injection characteristics with PIJ are the PIJ valve-opening pressure (P_2), the nozzle valve-opening pressure (P_0), and the accumulation volume (△V). How each factor influences the injection characteristics is explained below (the solid line changes to the dotted line).

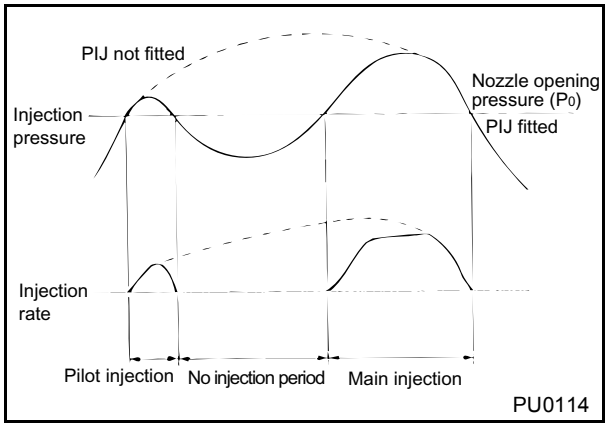

(1) PIJ valve-opening pressure

When the PIJ valve-opening pressure (P_2) is lowered, the pilot fuel delivery decreases.

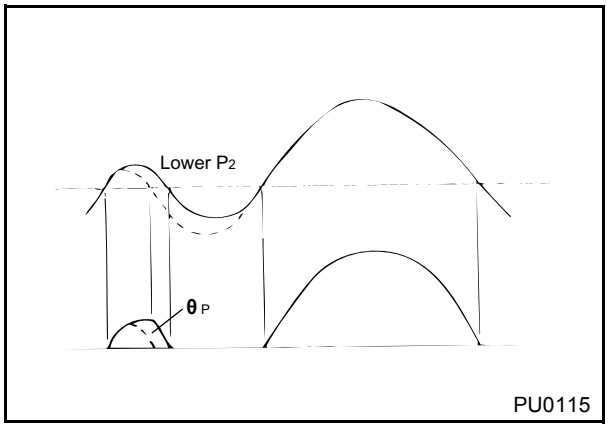

(2) Nozzle valve-opening pressure

When the nozzle valve-opening pressure (P_0) is lowered, the fuel delivery of both the pilot injection and the main injection increases.

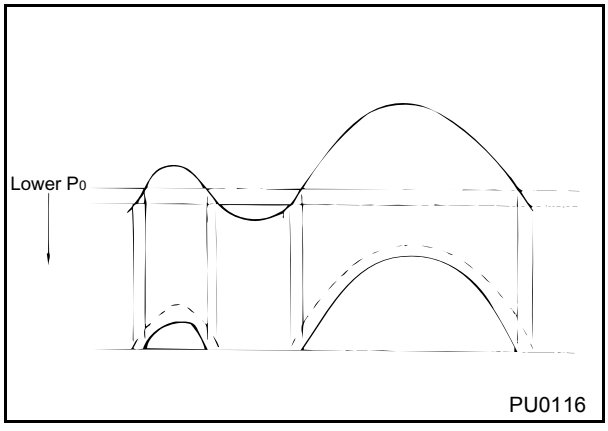

(3) Accumulation volume

When the accumulation volume (△V) increases, the length of time (θ_M) until the main injection starts becomes longer.

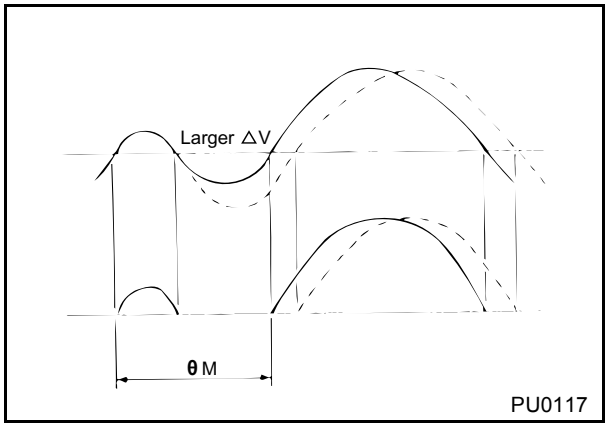

Donated by Onur Azeri . cruisercult.com

10-5. PIJ Removal, Installation, and Adjustment

[1] Before removing the PIJ, make sure that the nozzle valve-opening pressure is within standard.

[2] The removal, installation, and adjustment of the PIJ are performed in the following sequence:

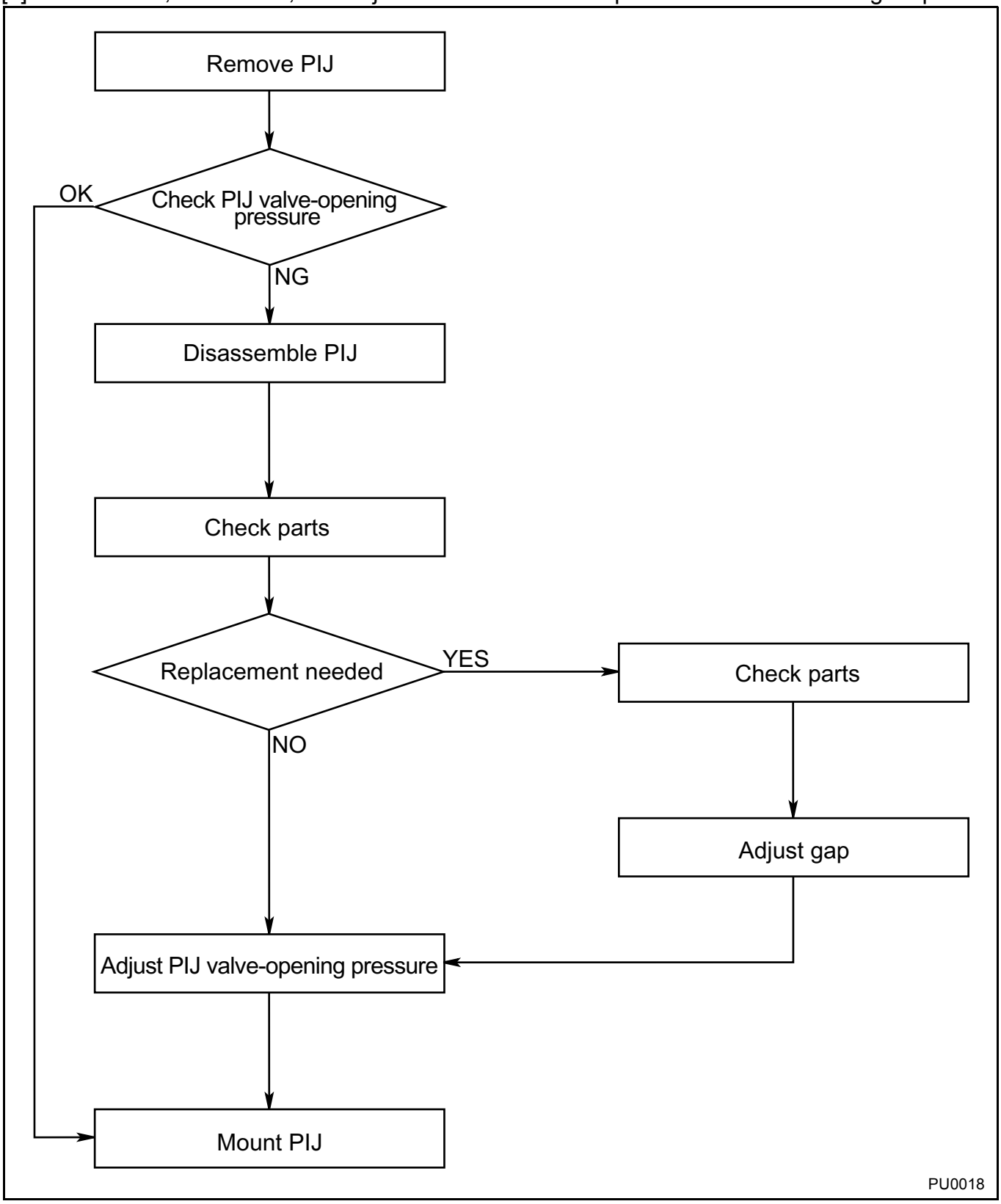

Donated by Onur Azeri . cruisercult.com

(1) STTs

The following STTs are necessary for removing, installing, and adjusting the PIJ:

	Part Name	DENSO P/N	Remarks
	PIJ tool kit	95096-00040	Includes the part Nos. 1 to 7.
1	PIJ socket	95096-10380	For PIJ removal and mounting
2	PIJ retaining socket	95096-10390	For PIJ disassembling
3	PIJ body socket	95096-10400	For PIJ disassembling
4	PIJ connector	95096-10410	For valve-opening pressure measurement
5	Measure attachment	95096-10420	For gap measurement
6	Marking guide	95096-10430	For remarking
7	Punch	95096-10440	For remarking

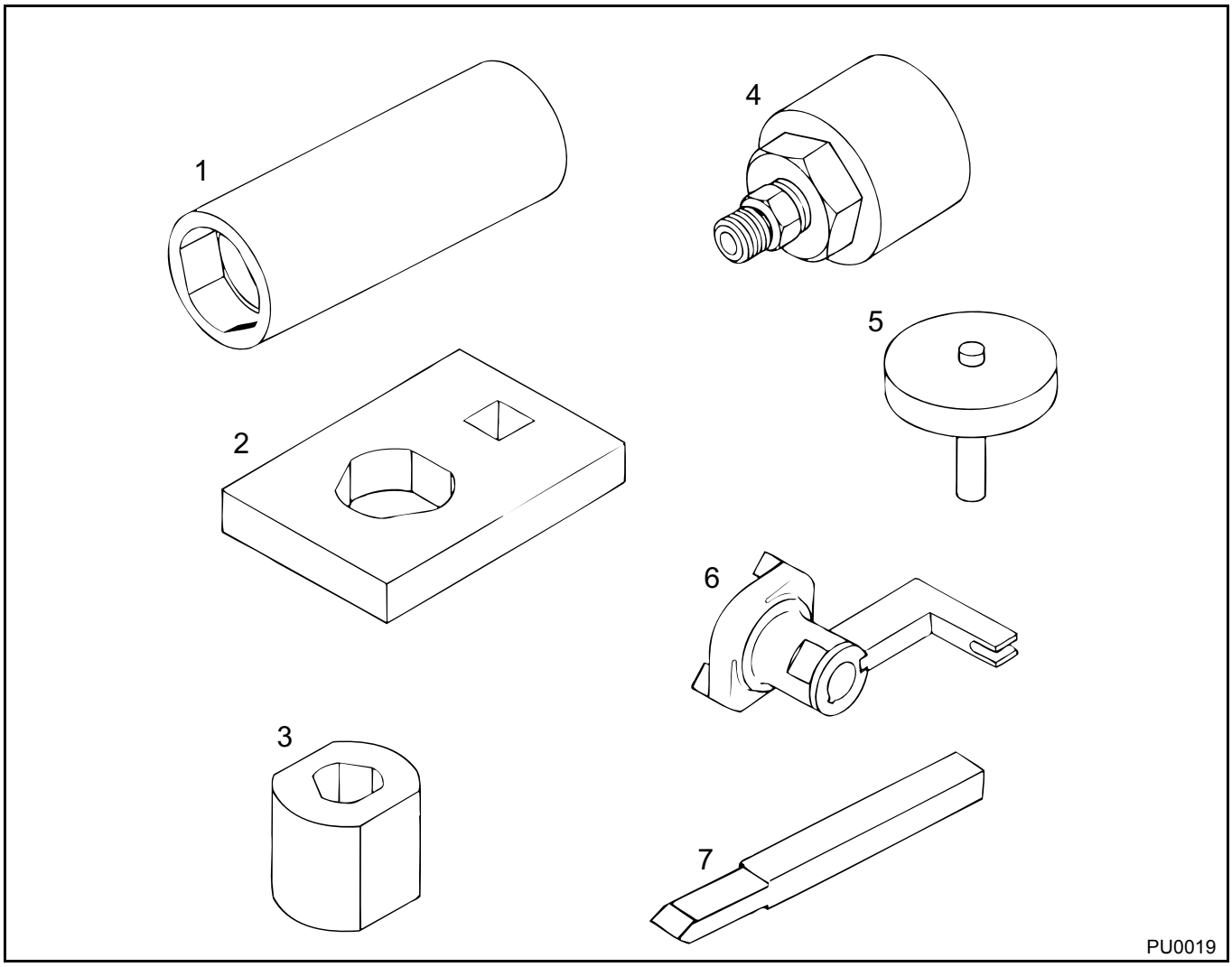

Donated by Onur Azeri . cruisercult.com

(2) PIJ removal
Use the PIJ socket (STT) to remove the PIJ from the pump body.

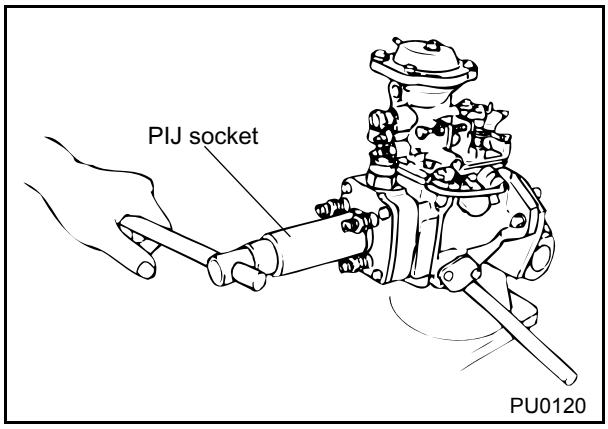

(3) PIJ disassembly
[1] Use the PIJ retaining socket (STT) to hold the PIJ retaining nut and remove the plug.

[2] Use the PIJ body socket (STT) and the PIJ retaining socket (STT) to remove the PIJ retaining nut.

NOTE:
Be careful not to drop the accumulator.

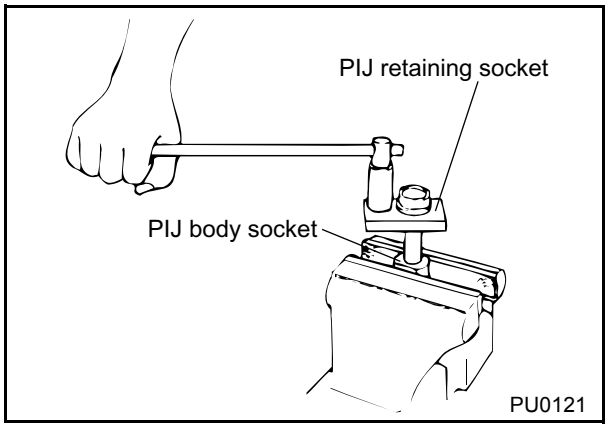

[3] Remove the accumulator, pressure pin, stopper, etc. from the holder.

NOTE:
The gap adjustment shim and the valve-opening pressure adjustment shim have the same shape so they must be marked for identification.

[4] Inspect the parts.

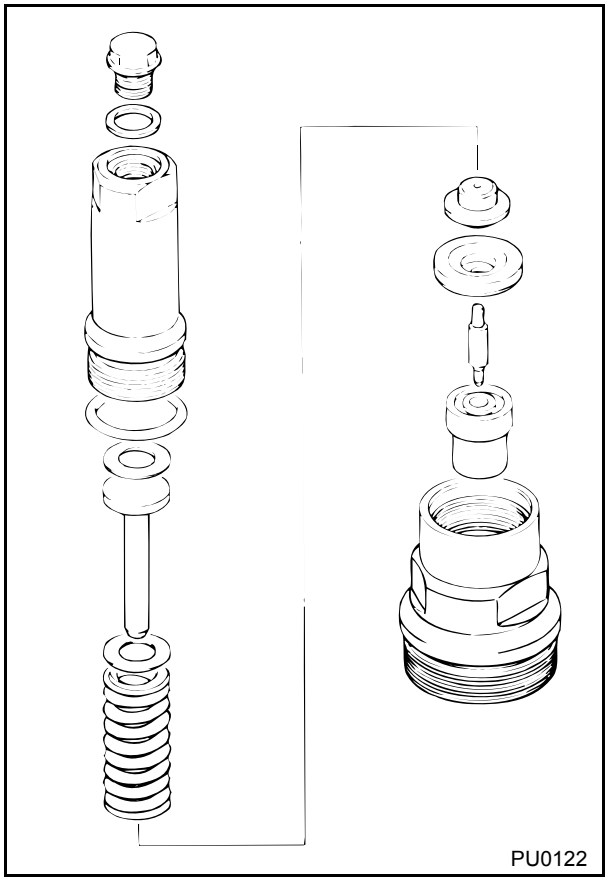

Donated by Onur Azeri . cruisercult.com

(4) PIJ installation and gap adjustment

[1] Install the parts on the holder.

[2] Use the PIJ body socket (STT) and the PIJ retaining socket (STT) to tighten the PIJ retaining nut.

Tightening torque: 63.7 to 68.6 N•m (6.5 to 7.0 kgf•m)

NOTE:

Do not interchange the gap adjustment shim and the valve-opening pressure adjustment shim.

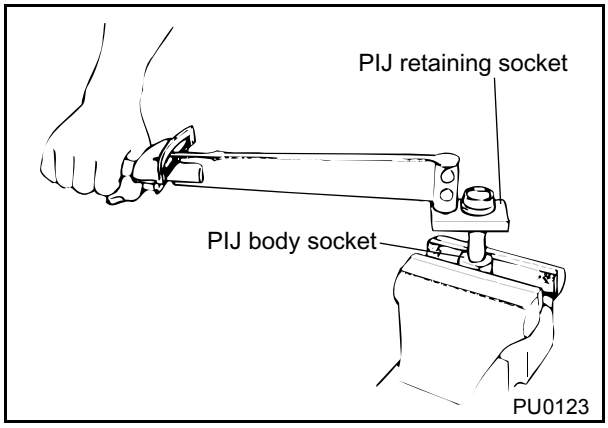

[3] Insert the measure attachment (STT) into the threaded hole of the plug, and place it on a surface plate.

[4] Use a magnetic stand to mount a dial gauge and set the graduation to "0".

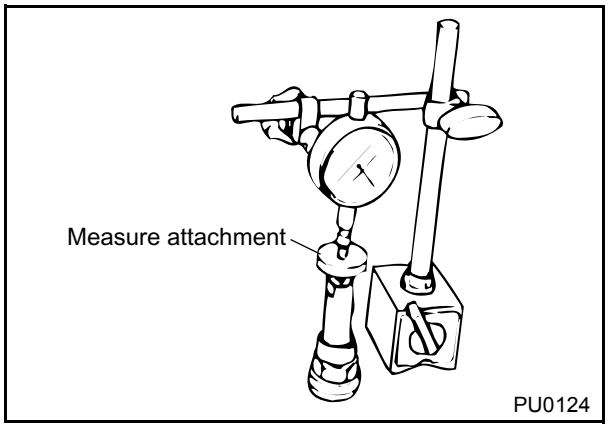

[5] Press the tab portion of the measure attachment (STT) with your fingers and measure the gap. If the gap is out of standard, replace the shim to adjust the gap.

Thicker shim: decreases the gap
Thinner shim: increases the gap

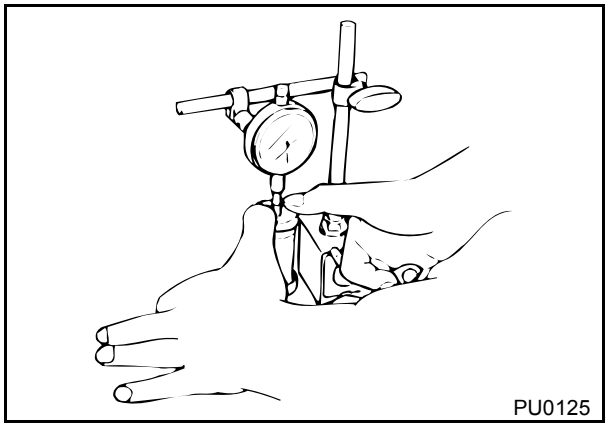

Gap Standard

Marking	Gap"a"(mm)
0011	1.1 ± 0.05
0020	0.2 ± 0.05
0030	$0.375^{+0.1}_{-0.05}$
0040	$0.375^{+0.1}_{-0.2}$

Donated by Onur Azeri . cruisercult.com

[6] Use the PIJ retaining socket (STT) to hold the PIJ retaining nut and tighten the plug.

Tightening torque: 78.5 to 98.1 N•m (8.0 to 10.0 kgf•m)

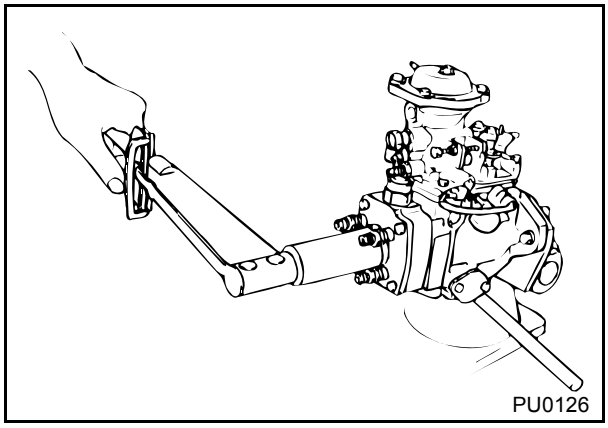

(5) PIJ valve-opening pressure adjustment

[1] Install the PIJ connector (STT) on the PIJ, and tighten it with the PIJ socket (STT).

Tightening torque: 63.7 to 68.6 N•m (6.5 to 7.0 kgf•m)

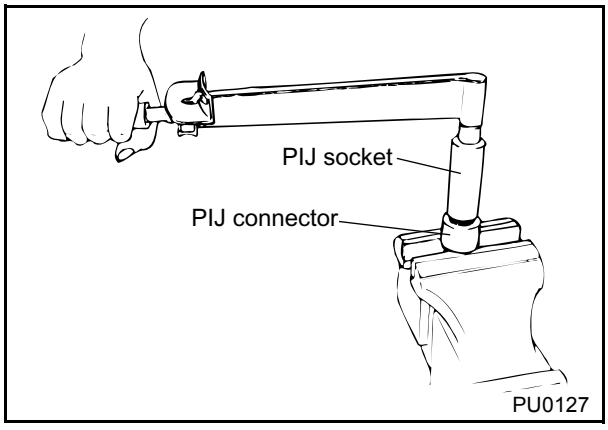

[2] Attach the PIJ to the nozzle hand tester, and pump it 4 or 5 times.
After the PIJ valve has opened (it makes a tock-tock sound when the pressure is increased), wait until the valve has seated (as the pressure decreases gradually, it stops at a certain pressure). Then, increase the pressure again.

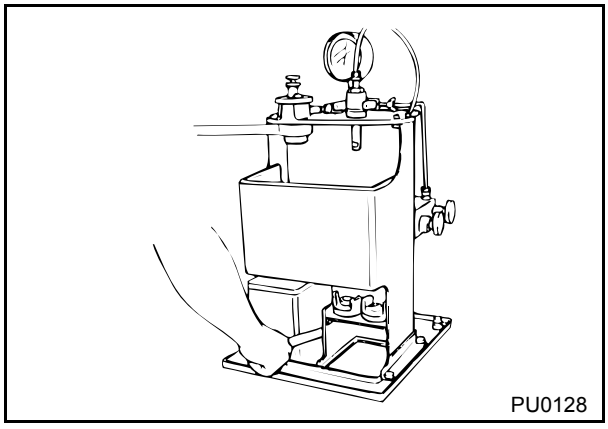

Donated by Onur Azeri . cruisercult.com

[3] Operate the handle slowly, and measure the pressure at the instant the PIJ valve opens.

NOTE:
Raise the pressure at a constant speed to cause the PIJ valve to open in a single stroke of the handle.

If the valve-opening pressure is out of standard, replace the shim to make an adjustment.

Thicker shim: increases the valve-opening pressure
Thinner shim: decreases the valve-opening pressure

PIJ valve-opening pressure: 12.3 ± 0.2MPa (125 ± 2 kgf/cm^2)

To measure it the second time and thereafter, do so after the PIJ has seated (when the pressure has decreased to a certain level).

Donated by Onur Azeri . cruisercult.com

10-6. Scribing a New Mark for Engine Installation

After the VE pump body has been overhauled, a new mark must be scribed on the flange for engine installation.

[1] Remove the PIJ, install the head plug of a conventional VE pump, and remove the head bolts.

[2] Install the plunger stroke measure (STT) and a dial gauge.

[3] Attach the marking guide (STT) on the driveshaft, align the plunger to the bottom-dead-center, and set the graduation on the dial gauge to "0".

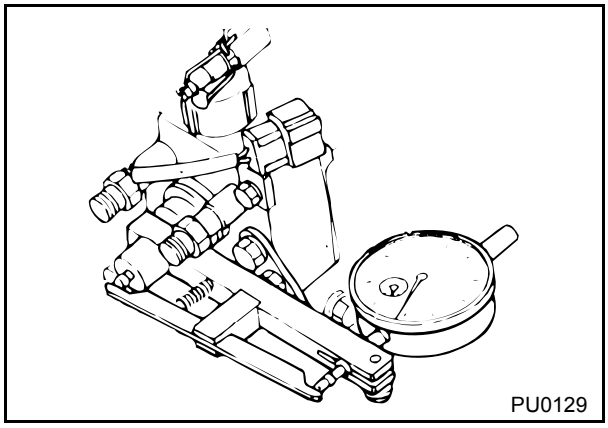

[4] Turn the driveshaft in the direction of the pump rotation. Then, when the amount of plunger lift reaches 1.0 mm, use the punch (STT) to scribe a mark on the flange.

NOTE:

If the location of the old and new marks differ, use a file to grind the old mark.

[5] Remove the STTs and the head plug and install the PIJ.

Tightening torque: 78.5 to 98.1 N•m (8.0 to 10.0 kgf•m)

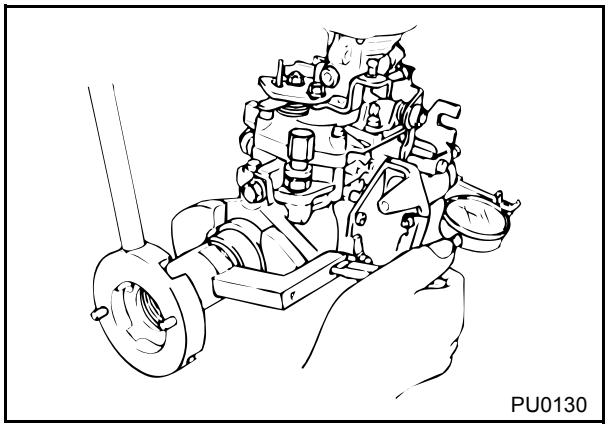

10-7. Installing the Pump on the Engine

The plunger lift cannot be measured when installing the pump on the engine because of the additionally attached PIJ. Therefore, the pump must be installed in the following sequence:

[1] Bring the No. 1 piston of the engine to the top-dead-center.

[2] Align the mark on the VE pump flange with the mark on the engine.

[3] Tighten the pump mounting bolts.

Donated by Onur Azeri . cruisercult.com

11. Externally Adjustable Timer

11-1. Outline

The method for adjusting this timer has been changed from the shim replacement to the adjusting screw type. Thus, it can be adjusted externally by merely removing the cap, without disassembling the contents.

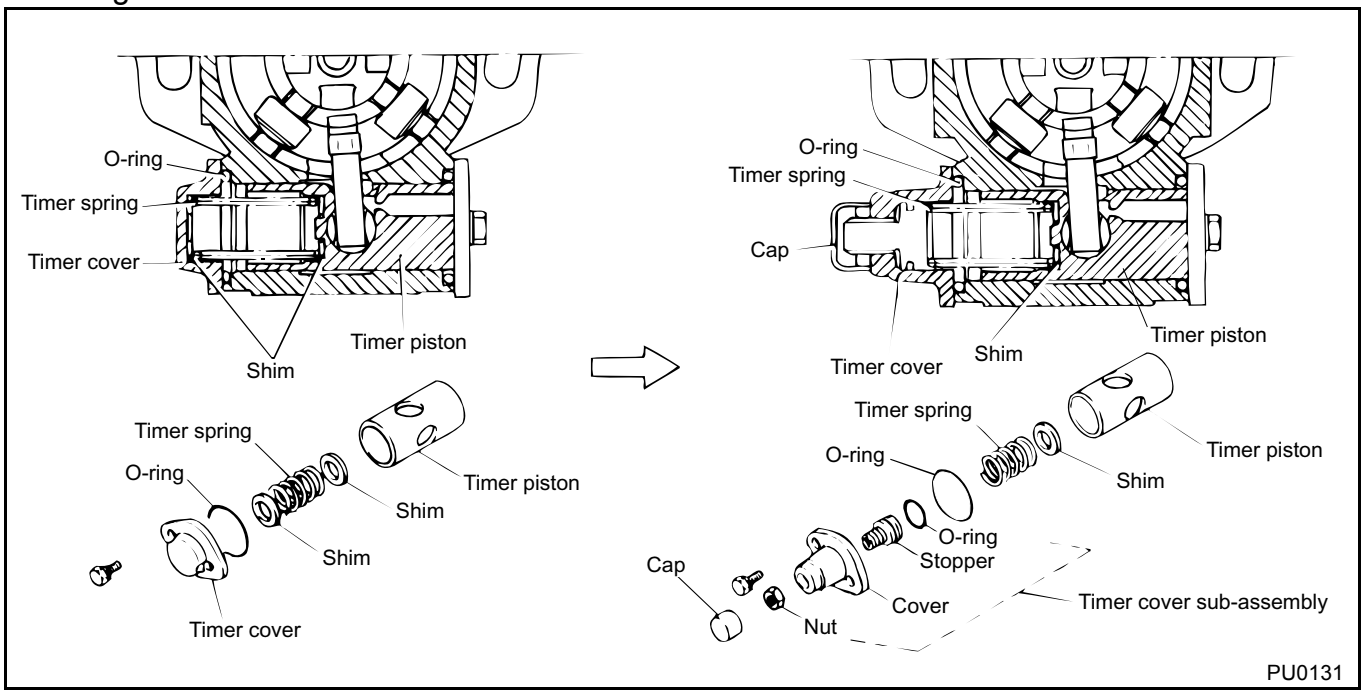

11-2. Adjustment Procedure

Using a pair of pliers, remove the cap, and adjust the screw with an Allen wrench (⬡ 6mm).

Tighten the screw: to decrease the stroke
Loosen the screw: to increase the- stroke

NOTE:
The cap is pressed in, and cannot be reused.

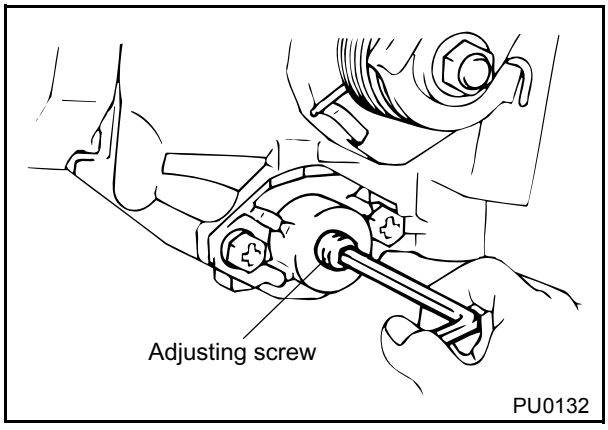

Donated by Onur Azeri . cruisercult.com

12. Servo Timer

12-1. Outline

The servo timer is a type of timer in which the stability and response have been improved through the addition of a servo valve.

12-2. Construction

Fig. PU0134 shows the difference between the servo timer and the previous timer.

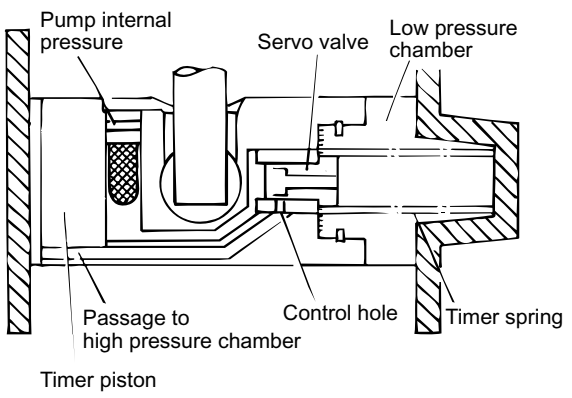

PU0133

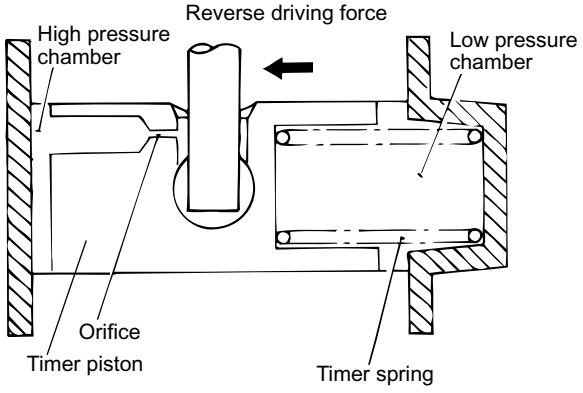

PU0134

12-3. Operation

(1) Advance timing

As the pump speed increases and the internal pressure in the tank becomes higher, the servo valve compresses the timer spring and moves to the right, allowing the control hole to open. Then, passing through the passage to the high-pressure chamber, the fuel flows in, causing the timer piston to move to the right (advance) side.

After the timer piston moves to the right and the control hole is closed by the servo valve, the inflow of the fuel stops, the timer piston stops, and the timing advance ends.

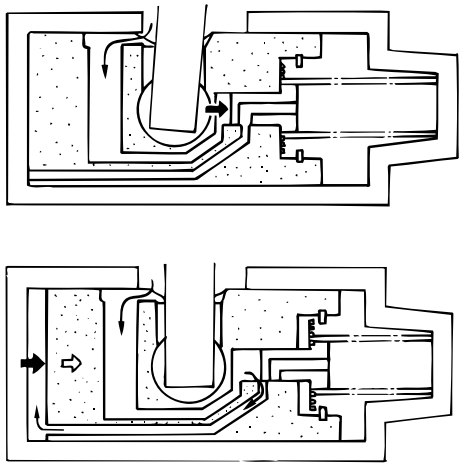

: Hydraulic circuit
: Working pressure
: Movement of timer piston

PU0135

Donated by Onur Azeri . cruisercult.com

(2) Retard timing

As the pump speed decreases and the internal pressure in the pump becomes lower, the timer spring pushes the servo valve to move to the left, allowing the control valve to open. Then, passing through the passage to the high-pressure chamber, the fuel flows out to the low-pressure chamber, causing the timer piston to move to the left (retard) side.

After the timer piston moves to the left and the control hole is closed by the servo valve, the outflow of the fuel stops, the timer piston stops, and the timing retard ends.

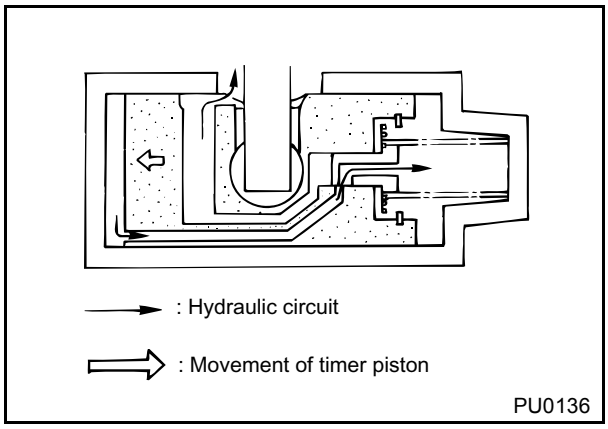

12-4. Characteristics

As explained in the description of operations given above, the position of the timer piston is determined by the position of the servo valve. Because the position of the servo valve is determined by the pump's internal pressure, low-pressure chamber pressure, and the timer spring, the position of the timer piston is also determined by the same factors.

In contrast, in the previous timer, the position of the timer piston was determined by the high-pressure chamber pressure, low-pressure chamber pressure, timer spring, and the drive reaction force*.

Because the servo timer is not influenced by the drive reaction force, it provides improved stability and response over the previous timer.

* The force that is applied to the timer piston when the cam rides over the roller while the pump is being driven.

12-5. Dual-Stage Servo Timer

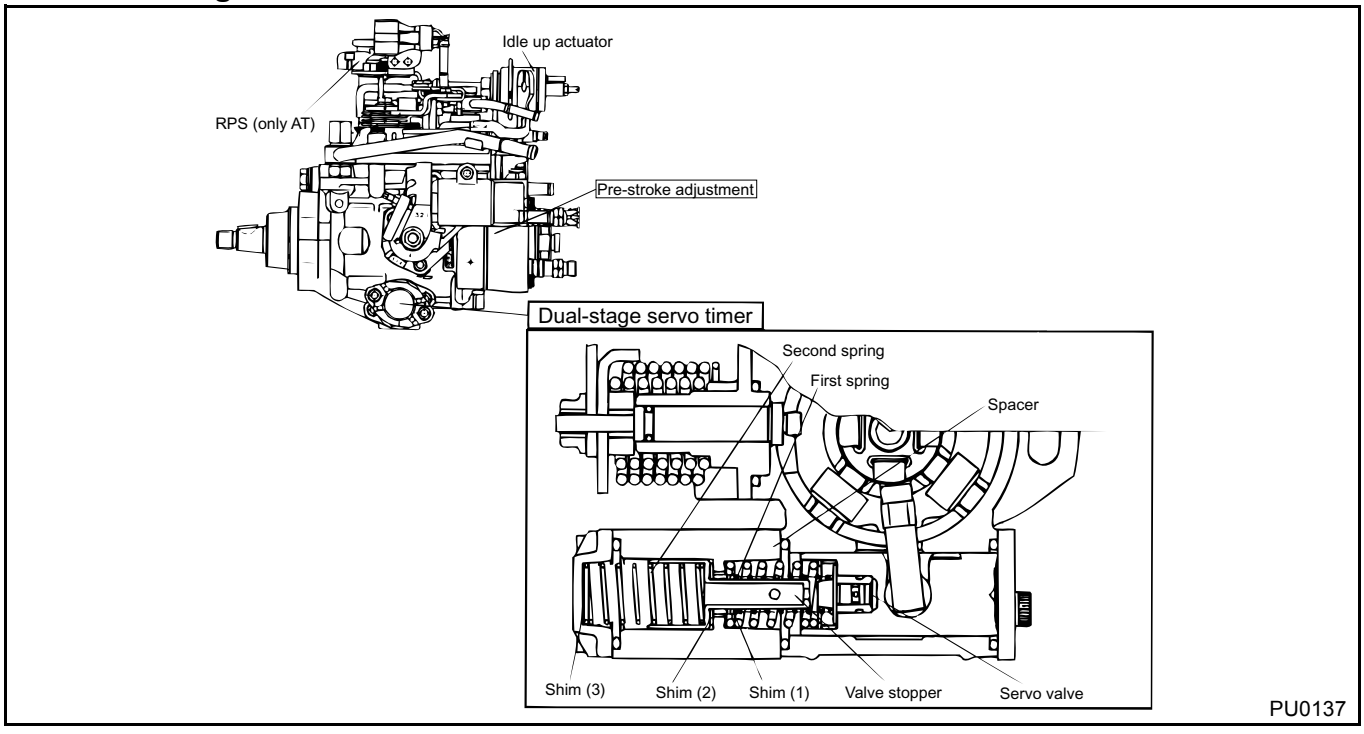

Donated by Onur Azeri . cruisercult.com

(1) Construction and operation

Compared to the previous servo timer, it has the following construction, operation, and characteristics. Refer also to the diagram below for adjustment procedures.

First stage

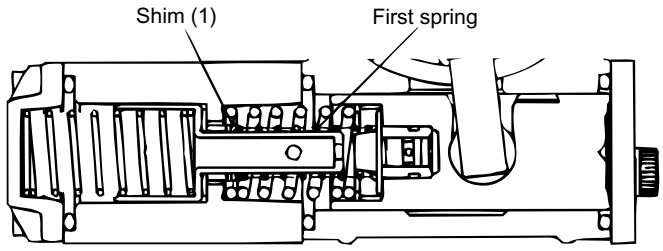

• Balance between internal pressure and first spring

PU0138

Adjustment location

• First spring
• Shim (1)

Characteristics

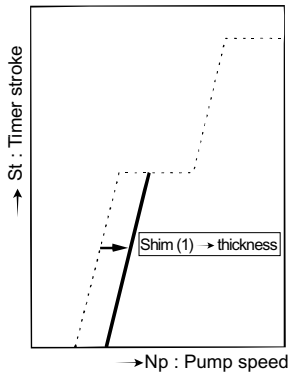

PU0139

Flat portion

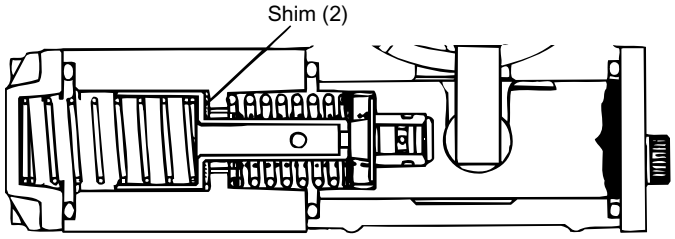

• Servo valve contacts servo stopper (internal pressure × servo valve cross section surface ≦ second spring set load)

PU0140

Adjustment location

• Shim (2)

Characteristics

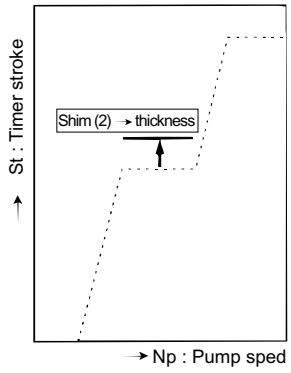

PU0141

Second stage

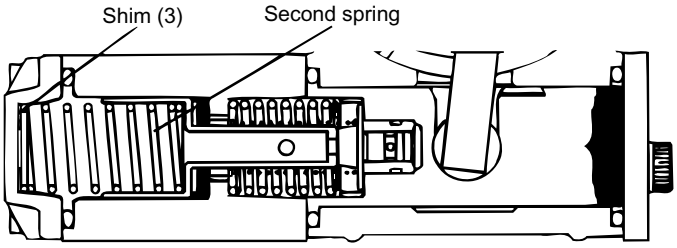

• Balance between internal pressure and second

PU0142

Adjustment location

• Second spring
• Shim (3)

Characteristics

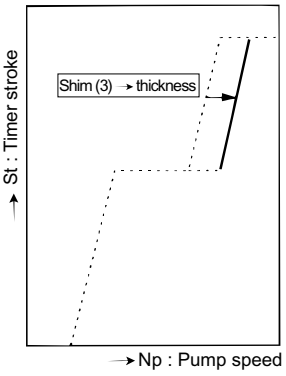

PU0143

Donated by Onur Azeri . cruisercult.com

(2) Pre-stroke adjustment

The pre-stroke adjustment is completely identical to the previous method. It must be adjusted before assembling the FCV and the head plug.

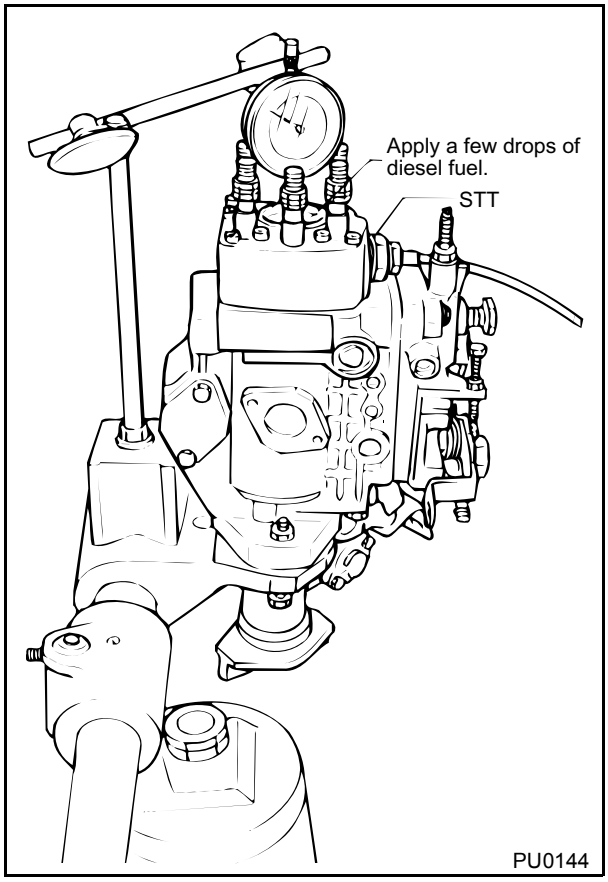

[1] Install the inlet adapter (STT) in the threads for mounting the FCV.

[2] Use a magnetic stand to mount a dial gauge, and place the pushrod tip to contact the top end of the plunger.

[3] Turn the driveshaft, align the plunger to the bottom-dead-center, and set the graduation on the dial gauge to "0".

[4] Apply a few drops of diesel fuel on the top end of the plunger, and apply air pressure of 0.1 bar (76 mmHg) to the STT in order to create air bubbles on the top end of the plunger.

[5] Slowly turn the driveshaft in the direction of the pump rotation. Read the graduation on the dial gauge when the air bubbles disappear from the top end of the plunger.

Standard value: 0.1 ± 0.02mm

[6] If it is out of standard, replace the plunger shim at the bottom of the plunger to adjust the pre-stroke.

Thicker shim: decreases the pre-stroke

[7] If dimension K is out of standard, replace the distributor head sub-assembly.

[8] After completing the adjustment procedure described above, install the FCV and the head plug.

Donated by Onur Azeri . cruisercult.com

13. Timing Control Valve (TCV)

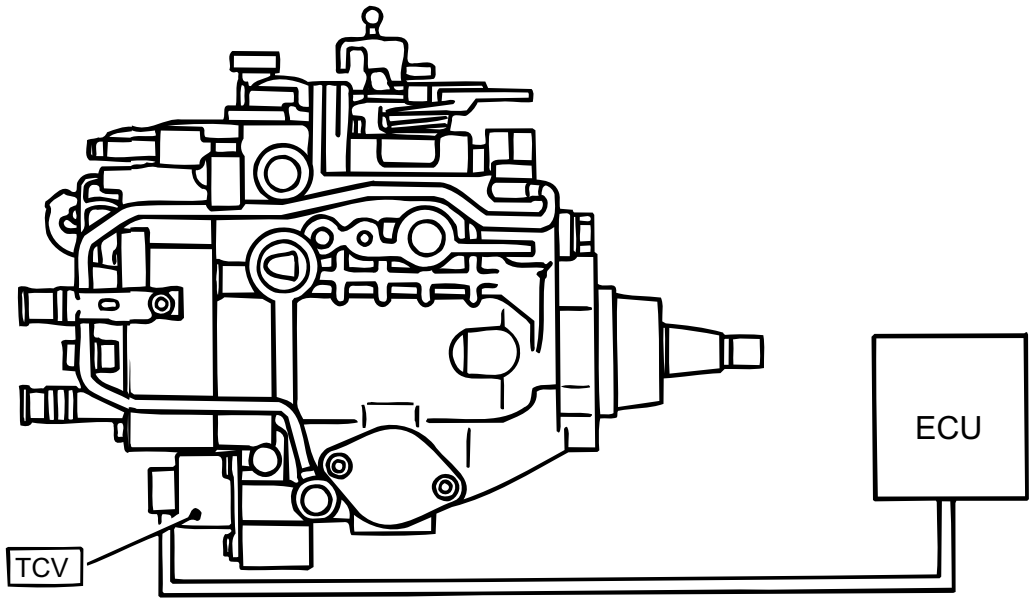

PU0145

13-1. Outline

NOTE:
The specifications may differ by model.

The timing control valve (TCV) renders the load sensing timer inactive when the coolant temperature is low (below 60 ℃) or when the pump is operated at high altitudes (in areas where the atmospheric pressure is below 700 mmHg).

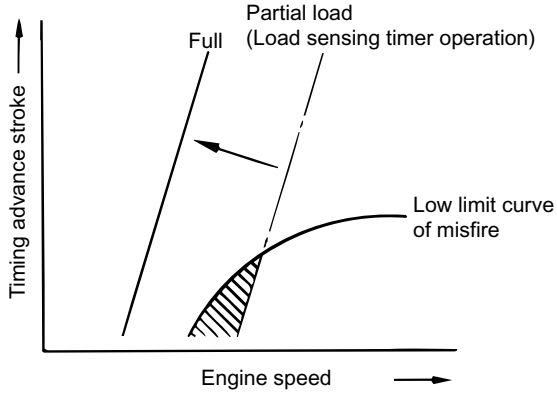

PU0146

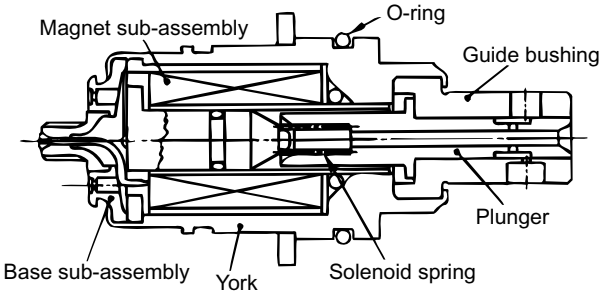

PU0147

Donated by Onur Azeri . cruisercult.com

13-2. Operation

(1) Load sensing timer's normal operation

After the engine has been warmed up (coolant temperature: 60 ℃ or higher) at sea level in which the atmospheric pressure is approximately 1 bar (700 mmHg or higher), releasing the accelerator pedal decreases the engine load. Accordingly, the load sensing timer activates, and the internal pressure of the pump is introduced to the intake side (timer's low-pressure side) of the feed pump. As a result, the pressure in the high-pressure side of the timer also decreases, allowing the timer piston to move to the retard side. At this time, the TCV is turned OFF, thus ensuring the fuel passage that is necessary for load sensing timer operation. (TCV OFF: fuel passage open; TCV ON: fuel passage closed.)

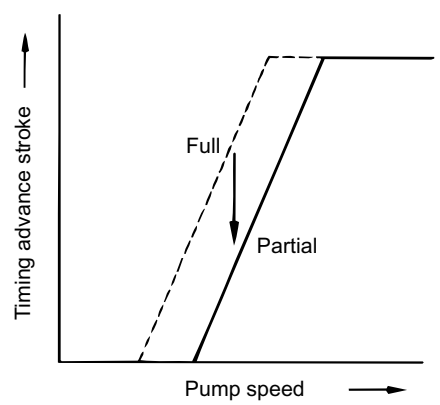

PU0148

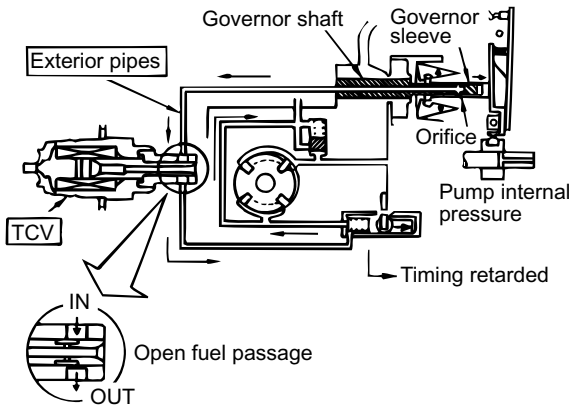

PU0149

(2) Load sensing timer canceling

Before the engine has been warmed up (coolant temperature: less than 60 ℃) at a higher altitude in which the atmospheric pressure is less than 700 mmHg, the water temperature sensor and the atmospheric pressure sensor send signals to the ECU. Based on these signals, the ECU sends a signal (ON signal) to pull on the plunger in the TCV in order to close the fuel passage. Therefore, the internal pressure of the pump is not introduced to the intake side (timer's low-pressure side) of the feed pump. Accordingly, because the load sensing timer remains inactive even if the engine load is decreased, the internal pressure of the pump does not decrease. Thus, because the timer piston is not moved to the retard side, the injection timing does not retard.

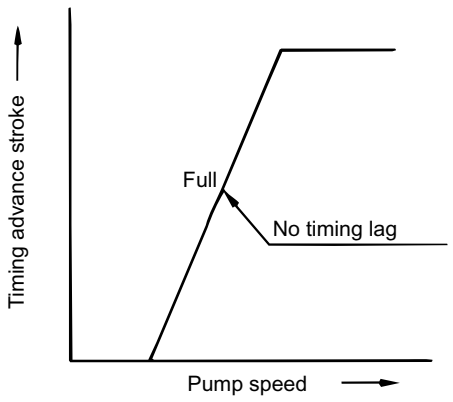

PU0150

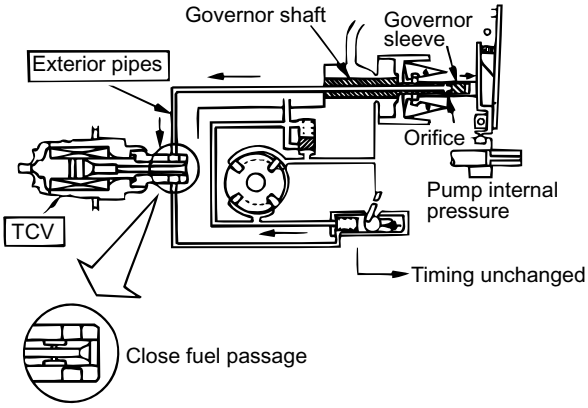

PU0151

Donated by Onur Azeri . cruisercult.com

14. SUPPLEMENTARY MECHANISMS OTHER THAN THE AUXILIARY DEVICES

14-1. Dual Lever

(1) Outline

The angle of the adjusting lever at the full, idle, and intermediate positions is specified by the linking relationship between the adjusting lever and the accelerator pedal. At times, the lever angle might not come within standard with a single lever, due to the tolerance of the speed control shaft or of the spring. In this case, a solution was to replace the lever with one in which the serration of the adjusting lever was staggered half a crest (7.5°).

The dual lever has been adopted to simplify the adjustment method. Consisting of a full lever and an idle lever, both are positioned within the respective standard. Then, they are staked together.

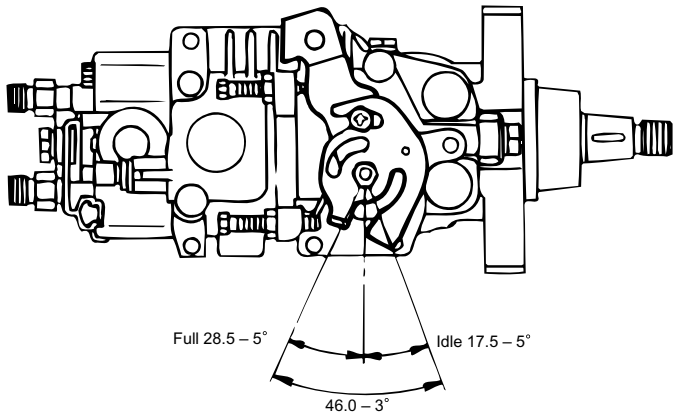

PU0152

(2) Construction

The top lever of the dual lever is for the full position, and the lower lever is for the idle position. Serrations are provided on the top lever (for the full position).

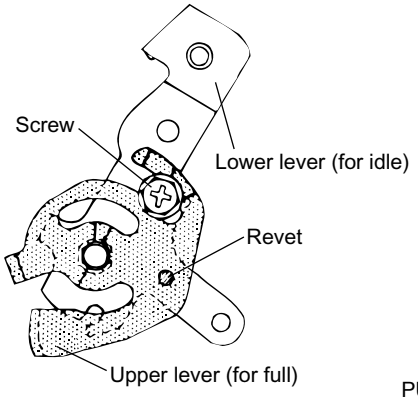

PU0153

(3) Dual lever maintenance

[1] Disassembly and Reassembly Precautions

Before disassembly, record the positional relationship between the line mark of the speed control shaft and the 3 line marks on the adjusting lever so that they can be reassembled in the original position.

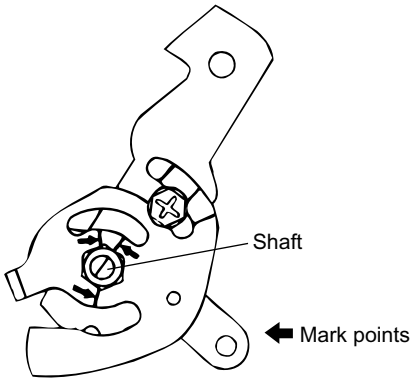

PU0154

Donated by Onur Azeri . cruisercult.com

[2] Adjusting Lever as a Service Part

For production use, the 2 levers that form the adjusting lever are staked together after the full and idle positions have been determined. Therefore, even if the part number might be the same, the position of the 3 line marks in relationship to the screw as shown in Fig. PU0155 could differ slightly. Adjusting levers that are staggered 7.5° are available for service use so that one that is close to the one used in production can be selected and used.

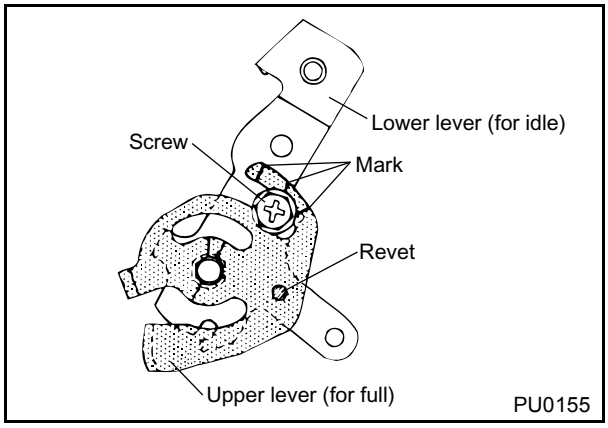

Selection Method:

Check which of the line marks aligns with the center of the screw. Determine which one of the types [1], [2], and [3] shown in Fig. PU0156 is the closest.
If it is type [1], use a lever with a 22.5° angle.

Part number: 096435-1310 (normal lever)
Part number: 096435-1290 (lever angle reduction lever only)

If it is type [2], select a lever depending on the position of the present adjusting lever in relation to the standard (see Fig. PU0156).
If it is type [3], use a lever with a 30.0° angle.

Part number: 096435-1300 (normal lever)
Part number: 096435-1280 (lever angle reduction lever only)

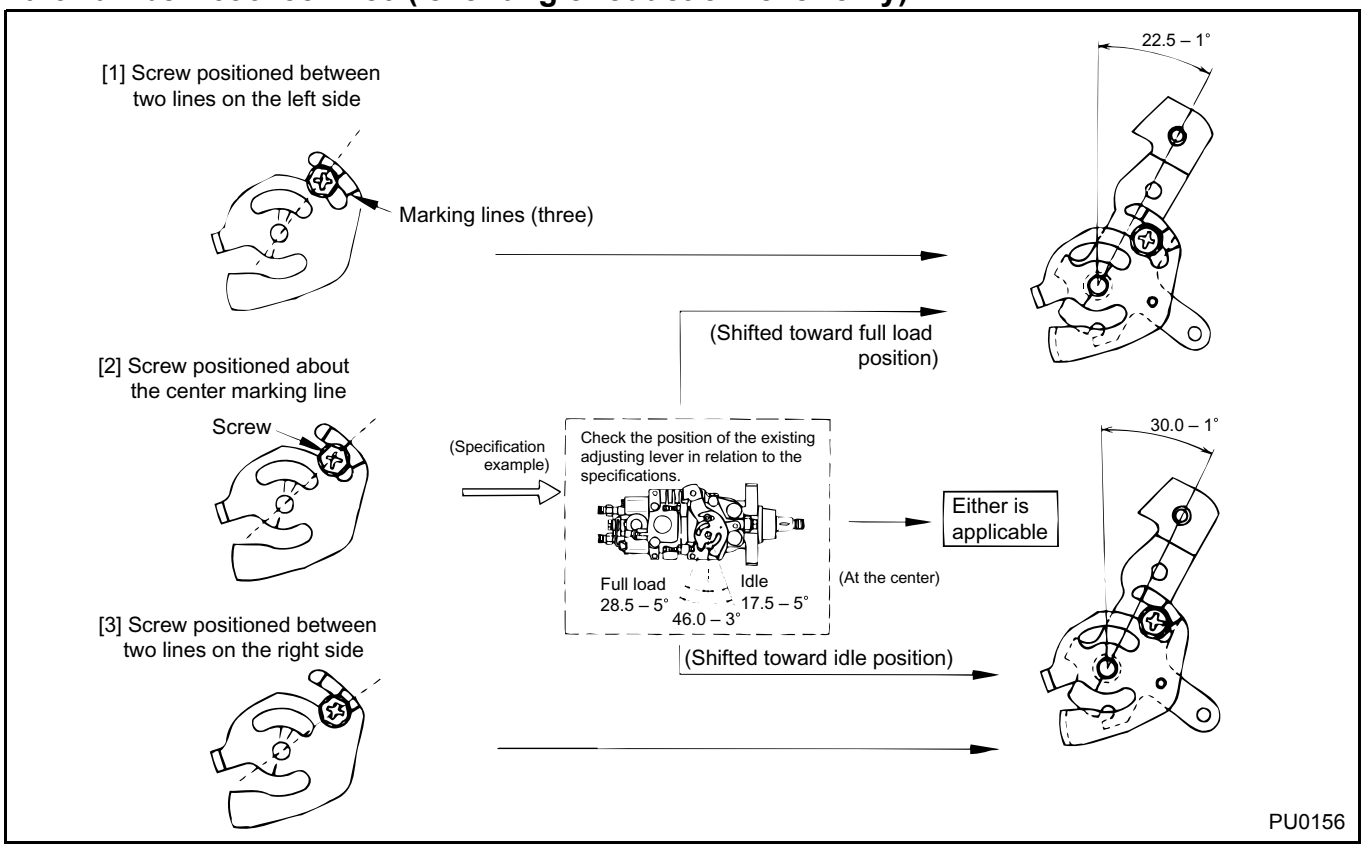

Donated by Onur Azeri . cruisercult.com

[REFERENCE]
Double return spring assembly method
1. Type I
[1] Place the spring guide and the inner and outer return springs on the governor.

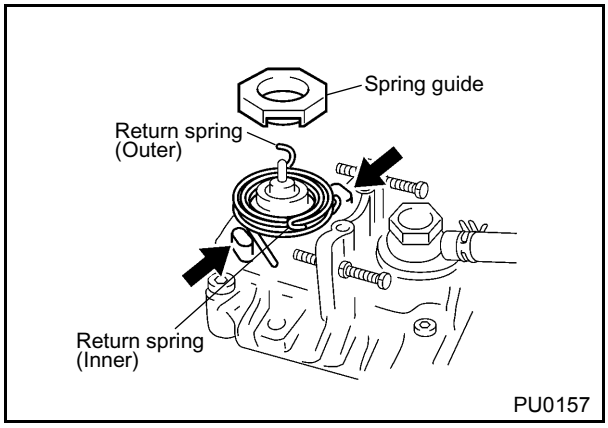

[2] Temporarily attach the adjusting lever (by keeping the set nut loose).

NOTE:
Align the matching marks of the adjusting lever and the shaft.

[3] Using a wire, install the inner return spring.

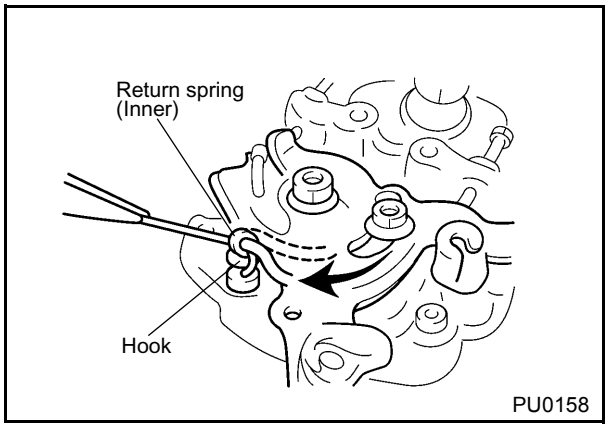

[4] Using a wire, install the outer return spring.

[5] Tighten the set nut on the adjusting lever.

Tightening torque: 7.8 N•m (0.8 kgf•m)

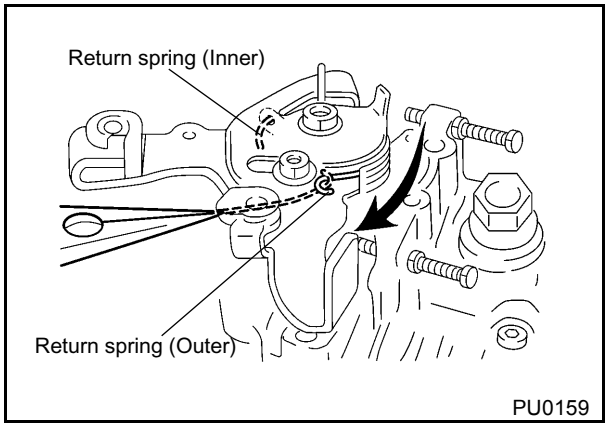

2. Type II
[1] Place the inner and outer return springs on the governor cover.

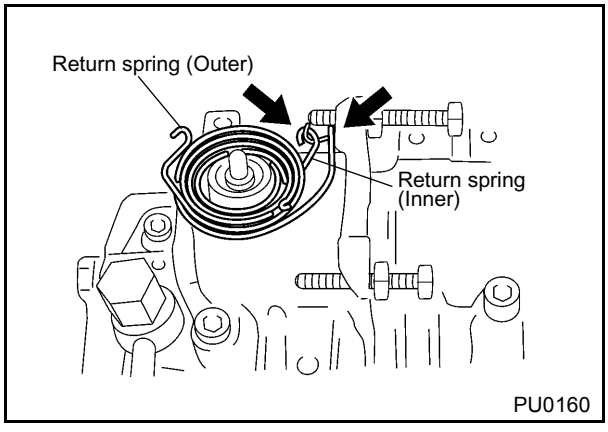

Donated by Onur Azeri . cruisercult.com

[2] Temporarily attach the adjusting lever and the spring guide (by keeping the set nut loose).

NOTE:
Align the matching marks of the adjusting lever and the shaft.

REFERENCE:
There is a type in which the adjusting lever and the spring guide are integrated.

[3] Using a wire, install the inner return spring.

[4] Using a wire, install the outer return spring.

[5] Tighten the set nut on the adjusting lever.

Tightening torque: 8.34 N•M (0.85 kgf•m)

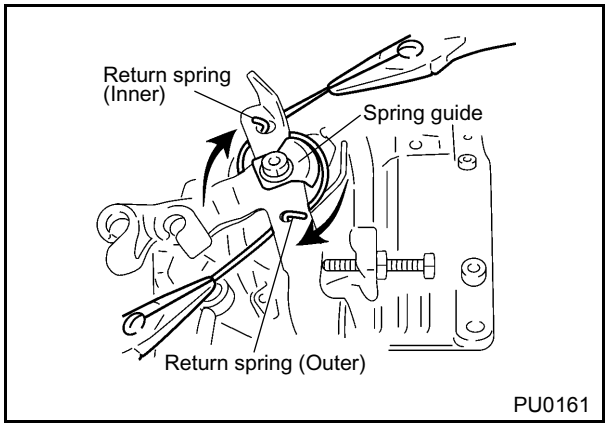

Donated by Onur Azeri . cruisercult.com

14-2. Lever Angle Reduction Lever

(1) Outline

The lever angle reduction lever improves the pump's performance in following the movement of the accelerator pedal.

(2) Construction

As shown in the diagram below, this lever consists of a simple construction in which a ball joint is added to one end of the adjusting lever. The ball joint can be moved in the slotted hole of the lever and set to an appropriate position.

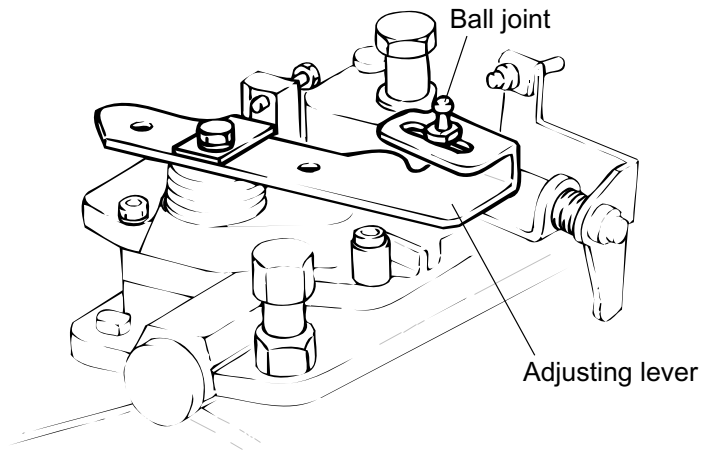

PU0162

(3) Function

In the case of the L engine, the movement of the accelerator pedal is transmitted via the accelerator cable to the accelerator link, and is transmitted via the throttle lever to the adjusting lever of the pump. At this time, on an automatic transmission vehicle, the movement of the accelerator pedal is transmitted from the accelerator link, via the throttle cable, to the automatic transmission.

However, on the 2L engine, the movement of the accelerator pedal is transmitted by the accelerator cable to the venturi linkage. From here, it is transmitted by the cable to the adjusting lever of the pump, and via the accelerator link and the throttle lever. To the automatic transmission, it is then transmitted via the throttle cable.

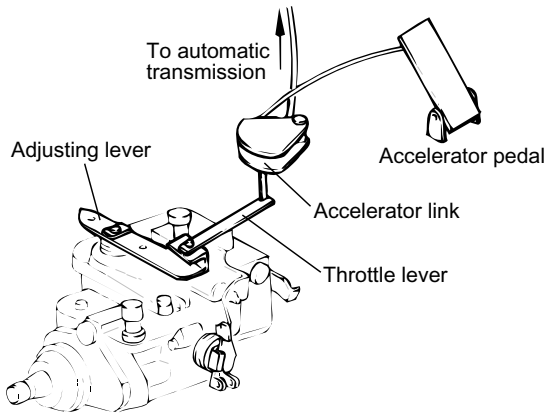

PU0163

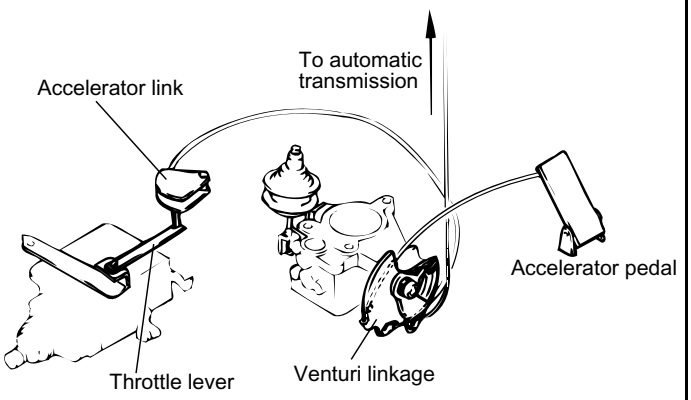

PU0164

Donated by Onur Azeri . cruisercult.com

As described thus far, in the case of the 2L engine, an additional cable is provided between the venturi linkage and the accelerator link. Accordingly, a possible error could be created between the amount of the accelerator pedal movement and the adjusting lever movement.
Therefore, the function of the lever angle reduction lever is to minimize the error by enabling the pump to absorb it as much as possible. This system is explained in detail below.

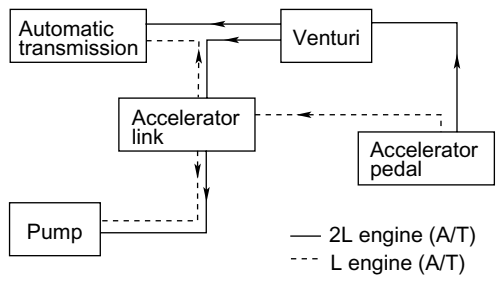

PU0165

As Fig. PU0166 shows, the pump's adjusting lever is connected to the throttle lever, and the movement of the throttle lever is specified by the movement of the accelerator link.
Due to the variances between pumps, a tolerance of ± 5 °, totaling 10 °, is allowed in the lever angle between the full and idle positions.
Therefore, even if the throttle lever moves a given amount, the amount of the change in the injection volume in proportion to that movement varies from pump to pump.

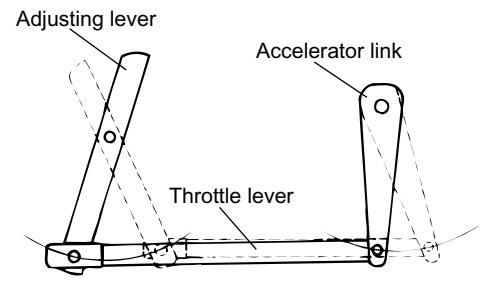

PU0166

Let us suppose that a pump has an adjusting lever with a rotational radius of 60mm. In proportion to the lever angle of 10 °, the amount of the change in the throttle lever movement will be approximately 10mm. This means that there is an approximate variance of 10mm between pumps, in the amount of movement at the tip of the adjusting lever. Due to the nature of the pump being a collective body of numerous parts, this type of variance is unavoidable and impractical to minimize.

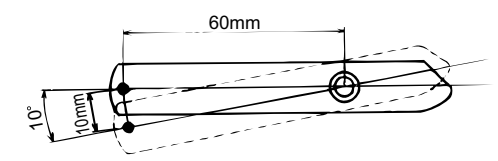

PU0167

Donated by Onur Azeri . cruisercult.com

Therefore, the lever angle reduction lever has been adopted to achieve the same amount of movement of the throttle lever and generate the same level of characteristics even if the lever angle between the full and idle positions has been changed.
If the ball joint is moved inward to the point at which the adjusting lever and the throttle lever meet, the movement angle of the adjusting lever increases, even if the amount of movement of the throttle lever remains the same. Conversely, if the ball joint is moved outward, the movement angle of the adjusting lever decreases.
Thus, on a pump with a greater full/idle lever angle than standard, the ball joint is moved inward. On a pump with a smaller full/idle lever angle, the ball joint is moved outward. As a result, the variances in the lever angle, which are effectively the variances in the injection volume in proportion to the changes in the accelerator pedal movement, are minimized.

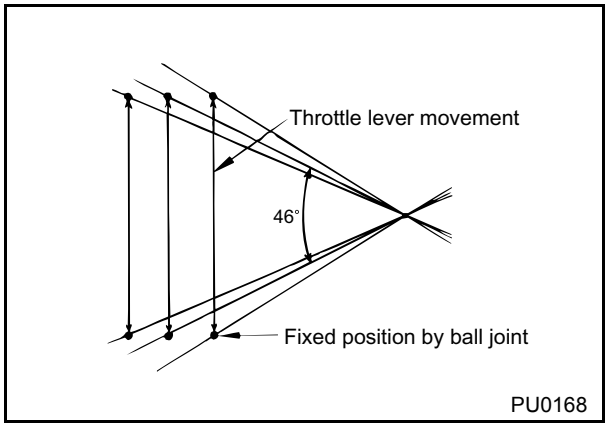

REFERENCE:
The reason why the lever angle reduction lever is installed only on automatic transmission vehicles:
The automatic transmission picks up shifting signals through the throttle cable. Thus, it shifts gears when the amount of movement of the throttle cable reaches a prescribed value. At this time, if the pump has not reached the fuel delivery for the amount of torque that is necessary for shifting, an excessive load is applied to the gears, which could cause damage. This is not a problem with manual transmission vehicles because the driver shifts the gears appropriately. On the automatic transmission vehicles, shifting takes place only in accordance with input signals, without making a proper judgment based on the operating conditions. Therefore, it is necessary to minimize the variances in the pump injection volume in relation to the signals that are input to the automatic transmission.

Donated by Onur Azeri . cruisercult.com

(4) Adjustment method

Change the position in which to secure the ball joint in accordance with the lever angle between the full and idle positions, as described previously.

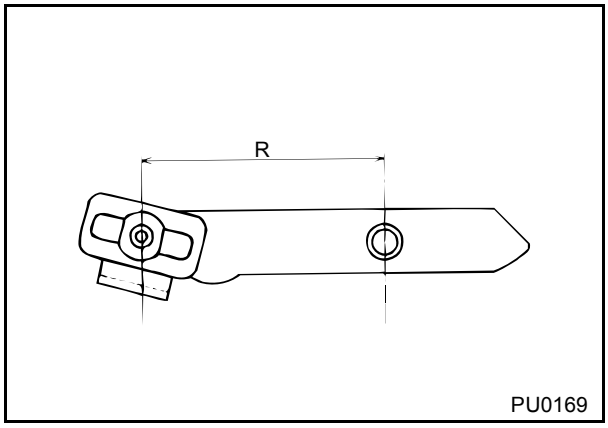

Procedure:

[1] Adjust the fuel delivery in accordance with the Test Specification.
[2] After completing all the adjustments, measure the operating angle of the adjusting lever between the full and idle positions.
[3] In accordance with the measured lever angle, select direction R, which is described in the diagram on the right, from the table below. Then, secure the ball joint to the selected position.

Lever angle (°)	R dimension (mm)
41.0-43.4	65.5 ± 0.5
43.5-45.9	61.5 ± 0.5
46.0-48.4	58.5 ± 0.5
48.5-51.0	55.5 ± 0.5

15. Adjustment

Make sure to perform the various adjustments described below if a VE pump has been disassembled and reassembled. Follow the directions given in this manual to perform the adjustments, which form the final stage of a service operation, because they directly affect the performance of the engine.

[Adjustment Sequence]

[1] Preparation
[2] Running-In Operation
[3] Pre-Adjustment
[4] Pump's Internal Pressure Adjustment
[5] Overflow Volume Check
[6] Timer Adjustment
[7] Boost Compensator (or Altitude Compensational Stopper) Adjustment
[8] Injection Volume Adjustment (Check)
[9] Load Sensing Timer Adjustment
[10] Low-Speed Lever Setting
[11] Partial Setting
[12] ACSD Adjustment
[13] TCV Adjustment
[14] Rotary Position Sensor Adjustment
[15] Idle-Up (for Heater, Power Steering, etc.) Check
[16] PCS Adjustment

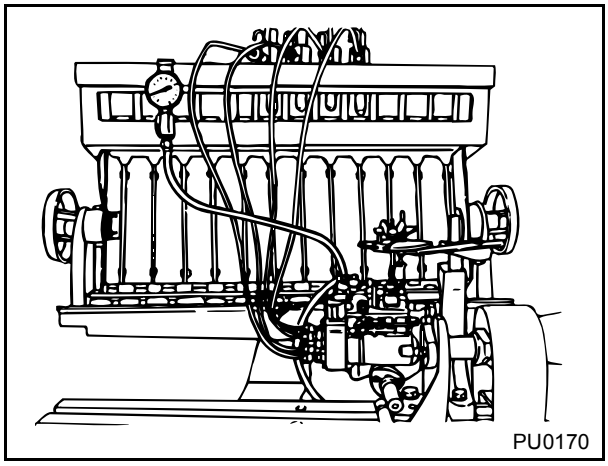

Donated by Onur Azeri . cruisercult.com

15-1. Pre-Test Inspection and Preparation

[1] Inspect whether the valve-opening pressure of the test nozzle is within standard.

REFERENCE:

Inspect and adjust the valve-opening pressure approximately every 20 hours. Follow the instructions in the Test Specification for the type of test nozzles and their valve-opening pressure.

[2] Install the binding stand (STT) for attaching an protractor.

[3] Install the VE pump on the pump mounting bracket (STT), and install it properly on the pump tester.

[4] Install the key on the driveshaft of the VE pump, use the spring washer and the round nut to tighten the coupling (STT) to the specified torque, and connect it to the coupling of the pump housing.

NOTE:

Manually turn the pump to make sure that it turns smoothly.

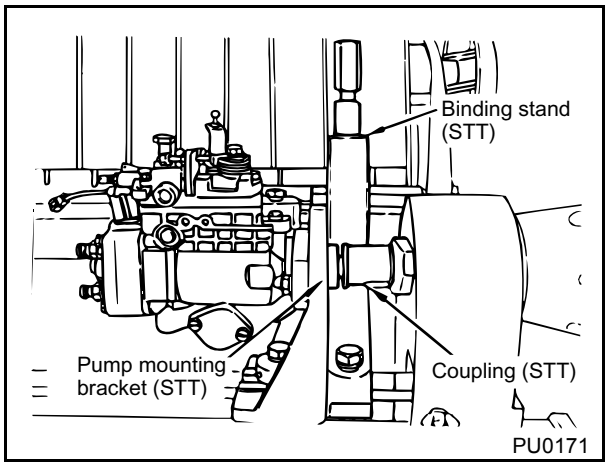

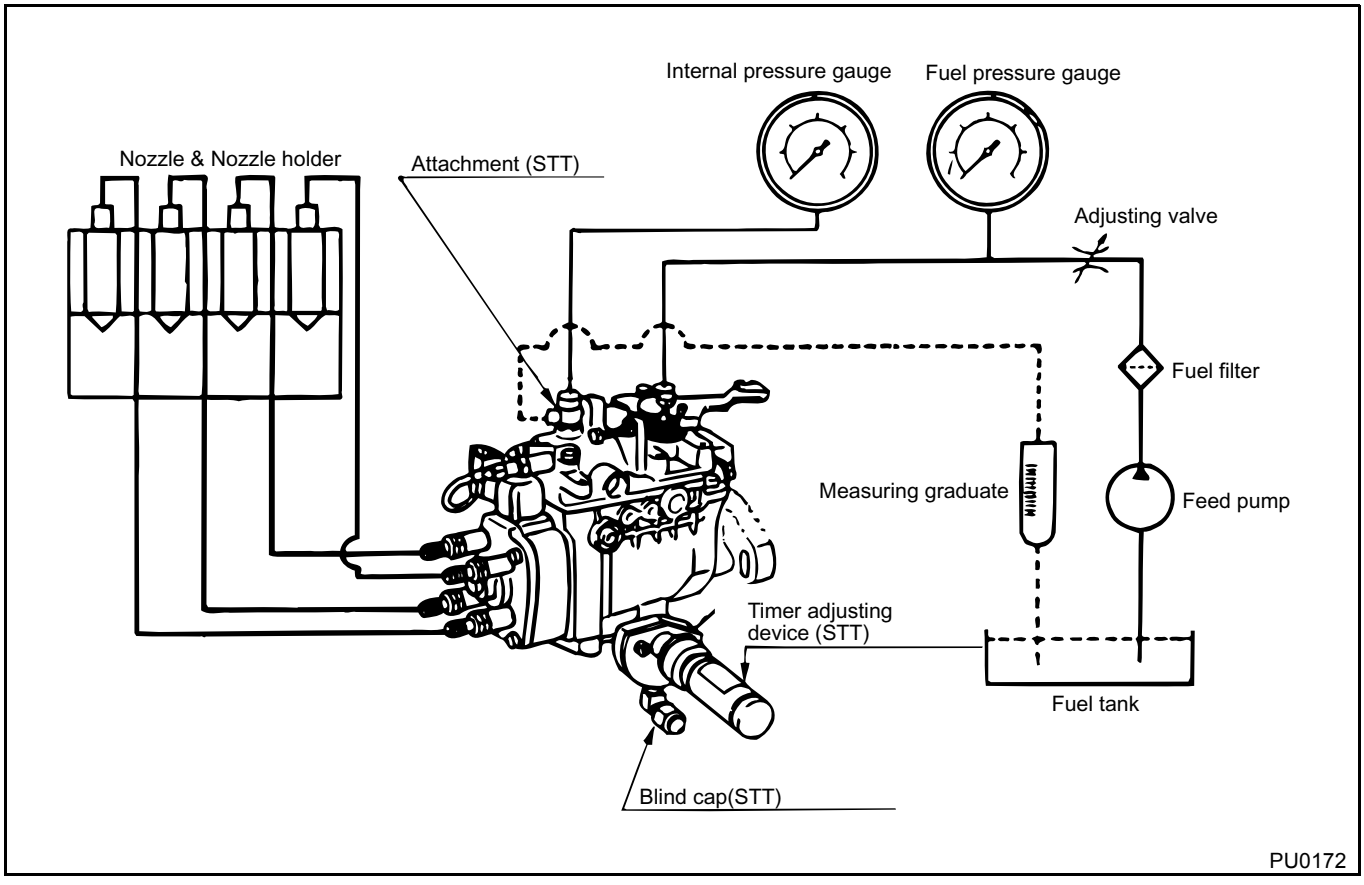

Donated by Onur Azeri . cruisercult.com

[5] Using the swiveling joint (STT), connect the fuel inlet hose from the test bench to the pump.

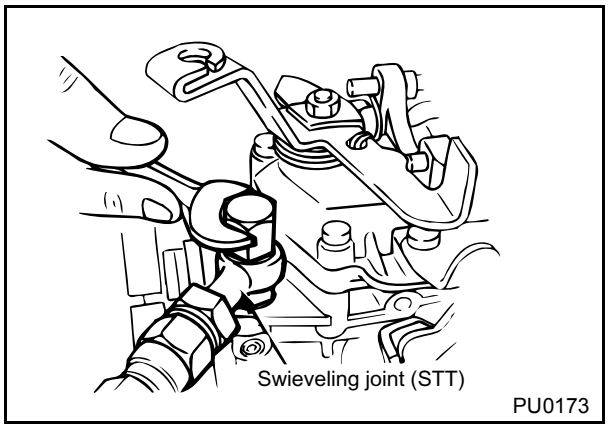

[6] Remove the overflow screw, and install the gauge attachment (STT) for measuring the internal pressure. Then, connect the overflow pipe from the test bench.

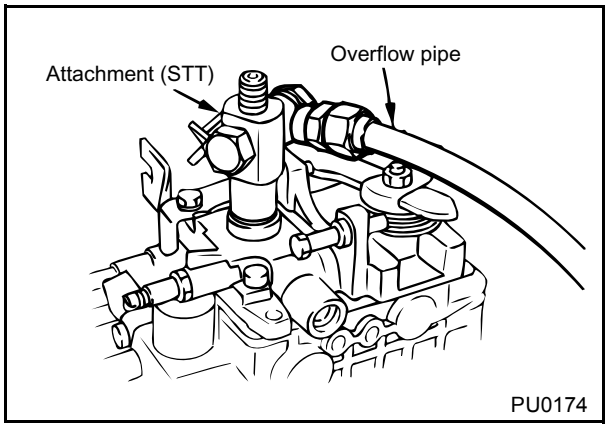

NOTE:
Make sure not to interchange the overflow screw with the fuel inlet hollow screw. As shown on the right, the overflow screw has an "OUT" mark stamped on it.

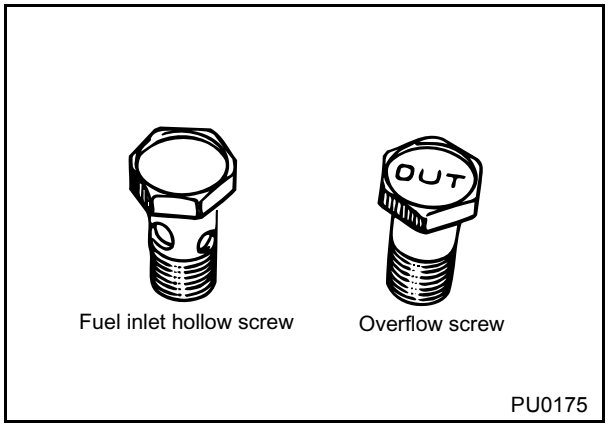

[7] Install the high-pressure pipe.

NOTE:
Use a high-pressure pipe with the following dimensions:
Bore ϕ 20 × Diameter ϕ 6.0 × Length 840mm

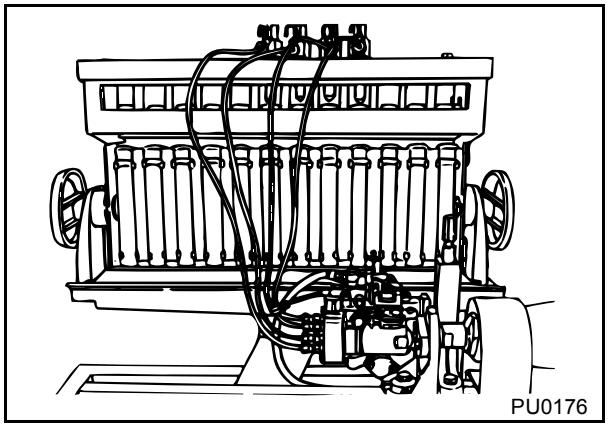

Donated by Onur Azeri . cruisercult.com

[8] Install the protractor (STT).

NOTE:
Fabricate a piece of pipe as shown below, and use it by fitting it on the ball portion of the adjusting plate.

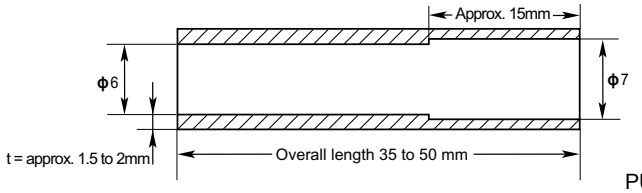

PU0051

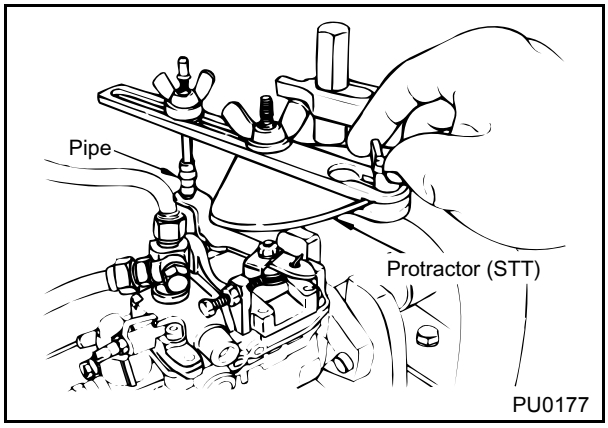

PU0177

[9] Using the power supply (STT), apply the specified voltage to the fuel cut solenoid.

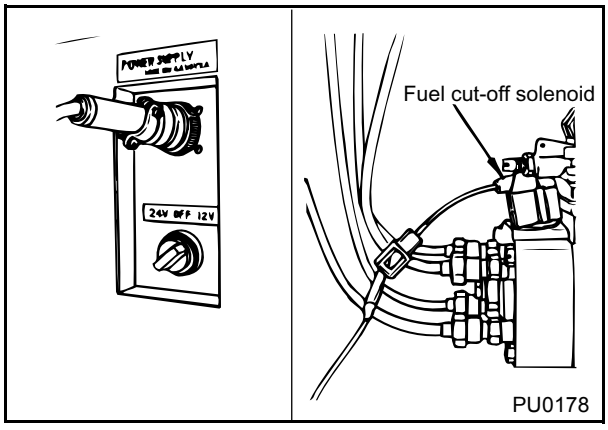

PU0178

15-2. Running-In Operation

[1] Constantly maintain the fuel temperature between 40 to 50 ℃ .

[2] Manually turn the pump to make sure that it turns smoothly.

[3] Adjust the pump tester's feeding pressure to 1.96 Pa (0.20 kg/cm^2).

[4] Rotate the pump at a low speed of approximately 300 rpm, and verify through the overflow pipe that the air has been eliminated from the pump chamber.

[5] Set the maximum speed stopper so that the adjusting lever is in the full position, and secure it in place with the angle graduation plate.
Gradually increase the pump speed, and verify that injection takes place at 1200 rpm.

REFERENCE:
Before performing this operation, thoroughly wipe any fuel from the pump surface so that if there is any fuel leak, it will be readily visible.

[6] In this state, operate the pump at 1200 rpm, and run it in for 5 minutes.

NOTE:
If any malfunction such as a fuel leak, inoperative injection, or noise is found during operation, immediately turn the switch OFF and inspect the pump.

Donated by Onur Azeri . cruisercult.com

[7] Bring the key groove of the driveshaft to the position shown in the diagram on the right, pull out the delivery valve from cylinder C, and apply a feed pressure of 1.96 Pa (0.20 kg/cm^2) to verify that fuel comes out.

NOTE:
If fuel does not come out of cylinder C, the cam plate is improperly assembled (180 ° opposite), and it must be corrected.

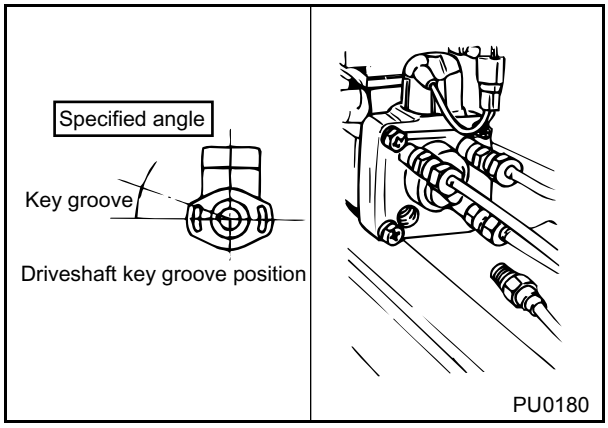

15-3. Pre-Adjustment

[Example of a Test Specification]

2 PRE-ADJUSTMENT						
	Lever Position (deg)	Pump Speed (rpm)	Positive Pressure (mmHg)	Fuel Delivery (cc/200st)	Max.Spread in Delivery (cc)	Remarks
Full Load	13.5 ± 5 ° (Full)	800	-	8.6 ± 0.1	0.6	
High Speed		1200	-	1.3 ± 0.5	-	
NOTE : Dimension of governor shaft, L = about 2.5mm						

(1) Pre-adjustment of the nominal full-load fuel delivery

Adjust the full-load set screw so that the specified fuel delivery can be obtained at the specified pump speed.

REFERENCE:
Tightening the screw increases the fuel delivery (1/2 turn changes 2.4cm^3/200st per cylinder).

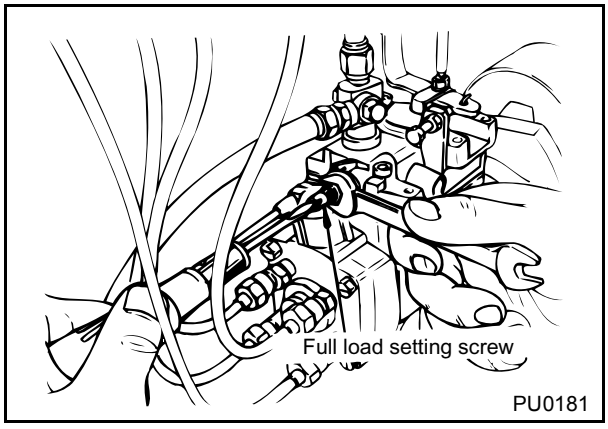

(2) Pre-adjustment of high-speed lever setting

Adjust the maximum speed set screw to obtain the specified fuel delivery at the specified pump speed.

REFERENCE:
Tighten the screw to decrease the fuel delivery.

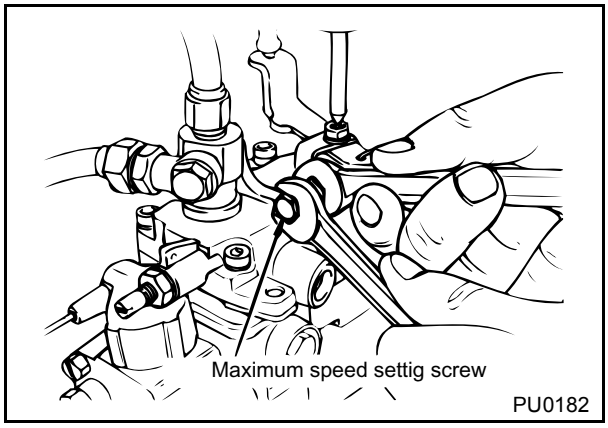

Donated by Onur Azeri . cruisercult.com

(3) Pre-adjustment of load-sensing timer

Verify that dimension L, the distance from the tip of the governor shaft to the end of the governor housing, is within standard.

L = 2.0 to 2.5mm

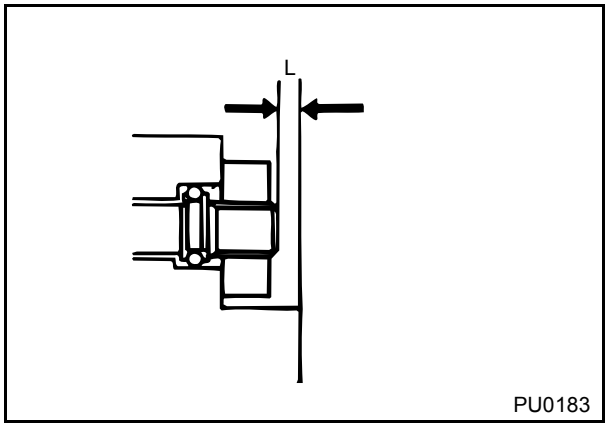

15-4. Pump's Internal Pressure Adjustment

[Example of a Test Specification]

3 ADJUTMENT OF INTERNAL PRESSURE				
Lever Position	Pump Speed (rpm)	Psitive Presure (mmHg)	Internal Pressure (kg/cm^2)	Remarks
Full	400	-	4.0 ± 0.3	By the regulating valve
	1100	-	5.9 ± 0.3	

[1] Measure the pressure at the specified pump speeds.

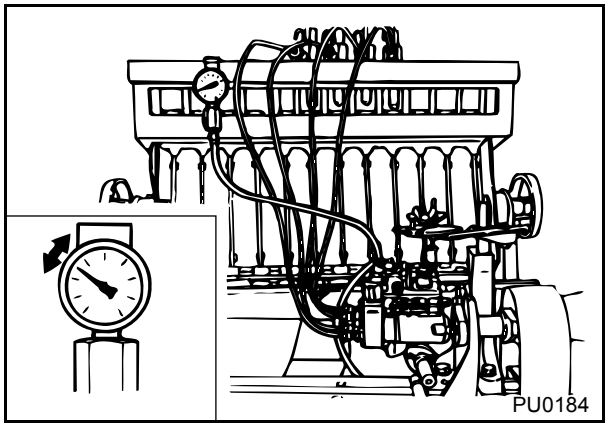

[2] If the pressure is lower than the standard, place a round rod measuring 3 to 4mm in diameter on the piston of the regulating valve, and lightly tap on the rod to adjust the pressure while observing the pressure gauge.

NOTE:

Do not tap it in too far.

[3] If the pressure is higher than the standard, replace the regulating valve.

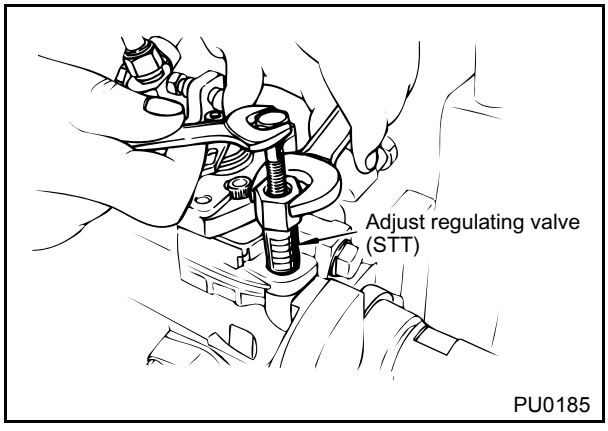

Donated by Onur Azeri . cruisercult.com

15-5. Overflow Volume Check

[Example of a Test Specification]

4 OVERFLOW QUANTITY CHECK				
Lever Position	Pump Speed (rpm)	Positive Pressure (mmHg)	Overflow Quantity (cc/1000st)	Remarks
Full	400	-	1330-2420	
NOTE : The overflow valve belonging to the pump should be used checking.				

Operate the pump at the specified speed, and use a 500cc measuring cylinder to measure the oveflow volume. Verify that it is within standard. While measuring, place the adjusting lever in the full position.

NOTE:
Make sure to use the overflow screw that is provided on every pump.

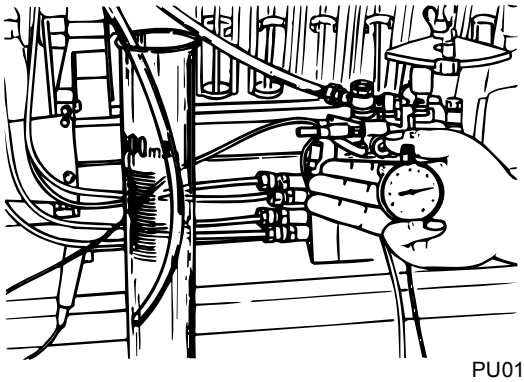

PU0186

15-6. Timer Adjustment

[Example of a Test Specification]

5 ADJUSTMENT OF TIMER				
Lever Position	Pump Speed (rpm)	Positive Pressure (mmHg)	Piston Travel (mm)	Remarks
Full	1200	450	1.3 ± 0.4	
	1300	450	2.6 ± 0.4	
	1600	450	6.5 ± 0.4	
	2000	450	7.2 ± 0.24	
NOTE : Hysteresis at each pump speed is less than 0.3mm.				

(1) For the shim adjustment type timer

[1] Remove the cover from the high-pressure side of the timer (the side without the timer spring), attach the timer measuring device (STT), and set it to "0".

[2] Measure the timer piston stroke at the specified pump speeds.

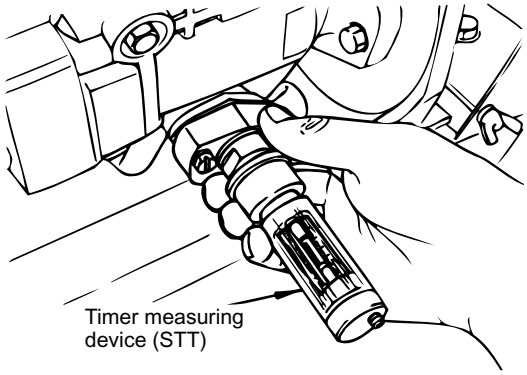

PU0187

Donated by Onur Azeri . cruisercult.com

[3] If the piston stroke is out of standard, adjust the piston stroke with the adjustment shims.

NOTE:
Verify that there is an adjustment shim at each end of the timer spring.

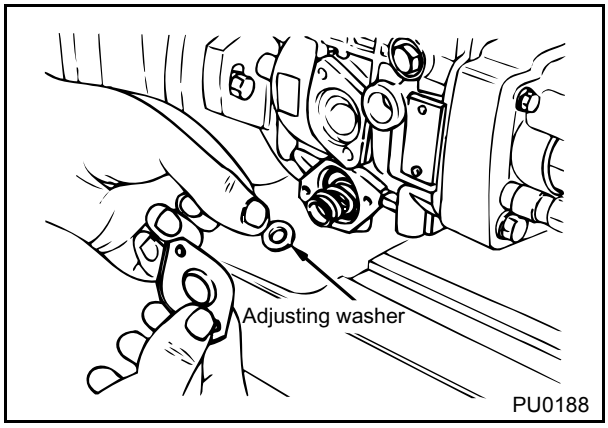

(2) For the externally adjustable timer
Using a pair of pliers, remove the cap, and adjust the screw with an Allen wrench (⬡ 6mm).

Tighten the screw: to decrease the stroke
Loosen the screw: to increase the stroke

NOTE:
The cap is pressed in, and cannot be reused.

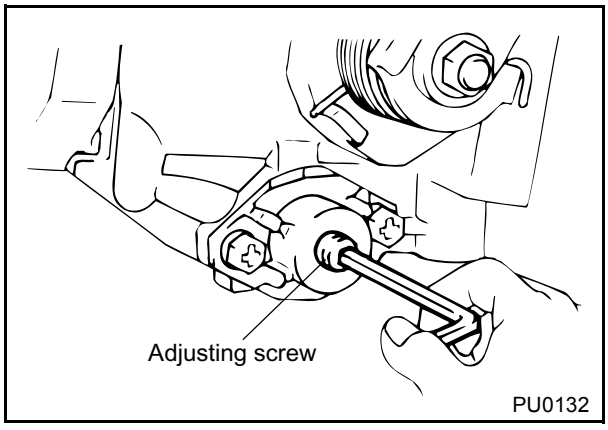

15-7. Compensator Adjustment

■ Boost Compensator Adjustment

[Example of a Test Specification]

6 ADJUSTMENT OF BOOST COMPENSATOR					
Lever Position	Pump Speed (rpm)	Positive Pressure (mmHg)	Fuel Delivery (cc/200st)	Max. Spread in Delivery (cc/200st)	Remarks
Full	1100	450	20.0 ± 0.3	0.6	
	500	0	10.0 ± 0.3	0.6	By eccentric cam
	500	150	11.5 ± 0.4	0.6	By BCS spring
	500	250	15.0 ± 0.5	0.6	
	1100	0	15.1 ± 0.5	-	
	1100	650	20.0 ± 0.3	-	
	1600	850	≦ 19.0	-	

Donated by Onur Azeri . cruisercult.com

[Fuel Delivery Adjustment Procedure]
Adjust the boost compensator in the following sequence:
(1) Airtight test
(2) Full-load fuel delivery adjustment (point "a")
(3) Full-load minimum fuel delivery adjustment (point "b")
(4) Boost compensator characteristics check (point "c")
(5) Boost compensator characteristics inclination check (point "d")
(6) Full-load minimum fuel delivery check (point "e")
(7) Point "f" and "g" check

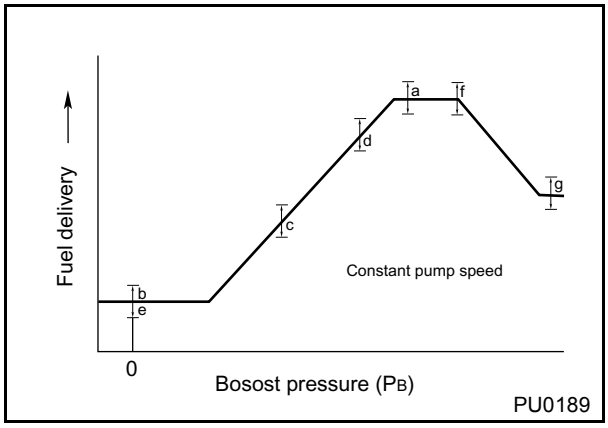

The procedures are described below.

NOTE:
For every setting, move the adjusting lever once back-and-forth between idle and full. -
While measuring the fuel delivery, place the adjusting lever in the full position.

(1) Airtight test
Measure the length of time that elapses from the time a positive pressure of 133.2 kPa (1,000 mmHg) is applied, until the pressure drops to 130.6 kPa (980 mmHg).

Standard: 10 seconds minimum

(2) Full-load fuel delivery adjustment
With a positive pressure of 60.0 kPa (450 mmHg) applied, rotate the pump at a speed of 1,100 rpm, and measure the fuel delivery.

Standard: 19.7 to 20.3cm³/200st

If the measurement is out of standard, adjust it by turning the full-load set screw.

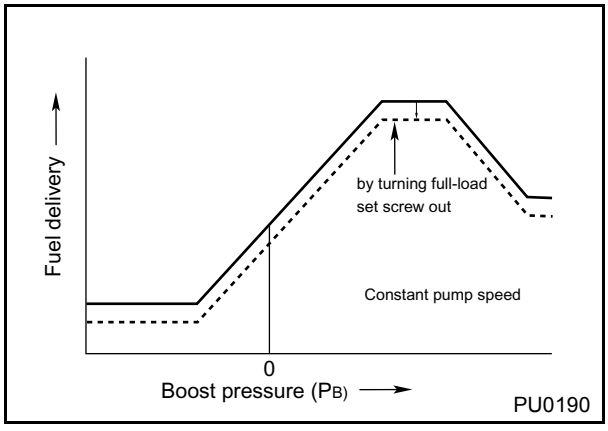

(3) Full-load minimum fuel delivery adjustment
At the positive pressure of 0 mmHg (without applying boost), rotate the pump at a speed of 500 rpm, and measure the fuel delivery.

Standard: 9.7 to 10.3cm³/200st

If the measurement is out of standard, adjust it at the eccentric cam.

Donated by Onur Azeri . cruisercult.com

(4) Boost compensator characteristics check
With a positive pressure of 20.0 kPa (150 mmHg) applied, rotate the pump at a speed of 500 rpm, and measure the fuel delivery.

Standard: 11.1 to 11.9cm^3/200st

If the measurement is out of standard, adjust it at the guide bushing.

(5) Boost compensator characteristics inclination check
With a positive pressure of 33.3 kPa (250 mmHg) applied, rotate the pump at a speed of 500 rpm, and measure the fuel delivery.

Standard: 14.5 to 15.5cm^3/200st

If the measurement is out of standard, replace the spring with one with a different spring constant.

REFERENCE:
Select and use a spring from among the springs with different spring constants.
After replacing the spring, perform the adjustment starting with step "(2)".

(6) Full-load minimum fuel delivery check
At the positive pressure of 0 kPa (without applying boost), rotate the pump at a speed of 1100 rpm, and measure the fuel delivery.

Standard: 15.1 to 15.6cm^3/200st

If the measurement is out of standard, perform the adjustment starting with step "(2)".

(7) Point "f" and "g" check
[1] Point "f" Check
With a positive pressure of 86.7 kPa (650 mmHg) applied, rotate the pump at a speed of 1,100 rpm, and check the fuel delivery.

Standard: 19.7 to 20.3cm^3/200st

[2] Point "g" Check
With a positive pressure of 113.3 kPa (850 mmHg) applied, rotate the pump at a speed of 1600 rpm, and measure the fuel delivery.

Standard: 19.0cm^3/200st maximum

If the measurement is out of standard, adjust it with shim A.

Donated by Onur Azeri . cruisercult.com

■ Load Control Equipped Boost Compensator Adjustment

[Example of a Test Specification]

6 ADJUSTMENT OF BOOST COMPENSATOR					
Lever Positon	Pump Speed (rpm)	Psitive Pressure (mmHg)	Fuel Delivery (cc/200st)	Max. Spread in Delivery (cc/200st)	Remarks
Full	1200	350	11.3 ± 0.2	-	
	1200	-350	7.2 ± 0.6	-	
	500	0	8.3 ± 0.4	-	
	500	250	10.6 ± 0.6	-	
	1200	450	11.3 ± 0.3	-	
	650	650	≦ 10.0	-	

[Fuel Delivery Adjustment Procedure]

Adjust the boost compensator equipped with load control in accordance with the following procedure (however, on the recent BACS, the characteristics checks are performed primarily with only positive pressure applied):

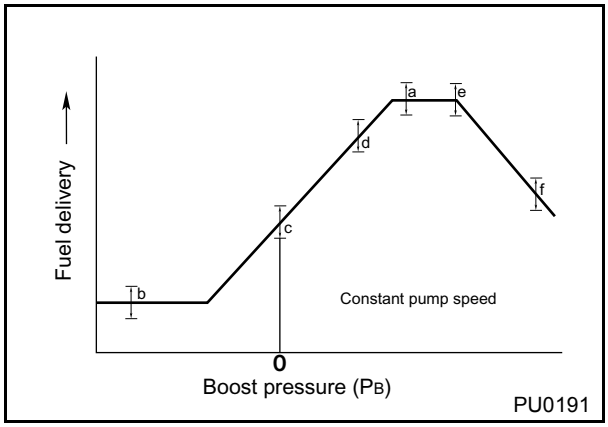

(1) Airtight test
(2) Full-load fuel delivery adjustment (point "a")
(3) Full-load minimum fuel delivery adjustment (point "b")
(4) Boost compensator characteristics check (point "c")
(5) Boost compensator characteristics inclination check (point "d")
(6) Point "e" and "f" check
(7) Full-load fuel delivery check (verify)

The procedures are described below.

NOTE:
For every setting, move the adjusting lever once back-and-forth between idle and full.
While measuring the fuel delivery, place the adjusting lever in the full position.

(1) Airtight test

Measure the length of time that elapses from the time a positive pressure of 133.2 kPa (1,000 mmHg) is applied, until the pressure drops to 130.6 kPa (980 mmHg).

Standard: 10 seconds minimum

Donated by Onur Azeri . cruisercult.com

(2) Full-load fuel delivery adjustment
With a positive pressure of 46.7 kPa (350 mmHg) applied, rotate the pump at a speed of 1,200 rpm, and measure the fuel delivery.

Standard: 11.1 to 11.5cm³/200st

If the measurement is out of standard, adjust it by turning the full-load set screw.

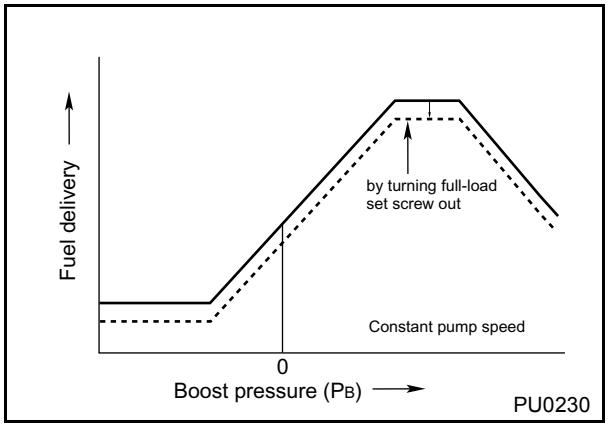

(3) Full-load minimum fuel delivery adjustment
With a vacuum of 46.7 kPa (350 mmHg) applied, rotate the pump at a speed of 1,200 rpm, and measure the fuel delivery.

Standard: 6.6 to 7.8cm³/200st

If the measurement is out of standard, adjust it at the eccentric cam.

(4) Boost compensator characteristics check
At the positive pressure of 0 kPa (without applying boost), rotate the pump at the speed of 500 rpm, and measure the fuel delivery.

Standard: 7.9 to 8.7cm³/200st

If the measurement is out of standard, adjust it at the guide bushing.

(5) Boost compensator characteristics inclination check
With a positive pressure of 33.3 kPa (250 mmHg) applied, rotate the pump at a speed of 500 rpm, and measure the fuel delivery.

Standard: 10.0 to 11.2cm³/200st

If the measurement is out of standard, replace the spring with one with a different spring constant.

REFERENCE:
Select and use a spring from among the springs with different spring constants.
After replacing the spring, perform the adjustment starting with step "(2)".

(6) Point "e" and "f" check
[1] Point "e" Check
With a positive pressure of 60.0 kPa (450 mmHg) applied, rotate the pump at a speed of 1,200 rpm, and check the fuel delivery.

Standard: 11.0 to 11.6cm³/200st

[2] Point "f" Check
With a positive pressure of 86.7 kPa (650 mmHg) applied, rotate the pump at a speed of 650 rpm, and measure the fuel delivery.

Standard: 10.0cm³/200st maximum

If the measurement is out of standard, adjust it with shim A.

Donated by Onur Azeri . cruisercult.com

(On some models, the pushrod may need to be replaced.)

(7) Full-load fuel delivery check (Verify)

With a positive pressure of 46.7 kPa (350 mmHg) applied, rotate the pump at a speed of 1,200 rpm, and check the fuel delivery.

Standard: 11.1 to 11.5cm³/200st

■ Altitude Compensational Stopper Adjustment

[Example of a Test Specification]

6 ALTITUDE COMPENSATIONAL STOPPER ADJUSTMENT					
Lever Position	Pump Speed (rpm)	Absolute Pressure (mmHg)	Fuel Delivery (cc/200st)	Max. Spread in Delivery (cc/200st)	Applying 0V to TCV Remarks
Full	1200	0	12.7 ± 0.1	0.4	
	1200	640 ± 1.5	11.4 ± 0.3	-	By shim

(1) Preparation

Connect a hose for applying a vacuum, and connect the digital air pressure meter and the vacuum hose as shown in the diagram on the right.

REFERENCE:

Tightening the screw increases the injection volume. (1/2 turn changes 2.4cm³/200st per cylinder)

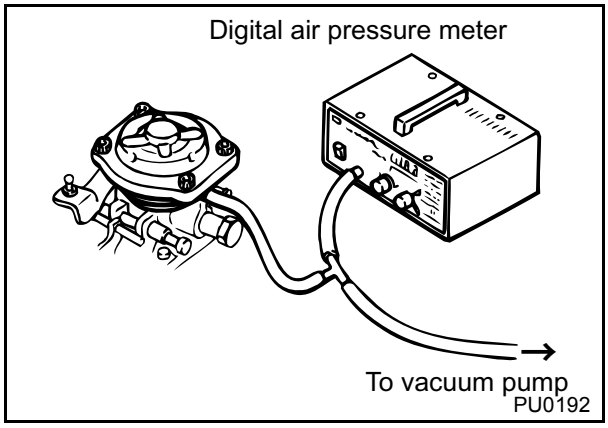

(2) Adjustment

After setting the nominal fuel delivery, measure the fuel delivery when an absolute pressure of 85.1 to 85.5 kPa (load:-15.8 to -16.20 kPa 〈-118.5 to -121.5 mmHg〉) is applied.

Standard: 11.1 to 11.7cm³/200st

NOTE:

Move the adjusting lever back-and-forth 5 times between idle and full before adjusting.

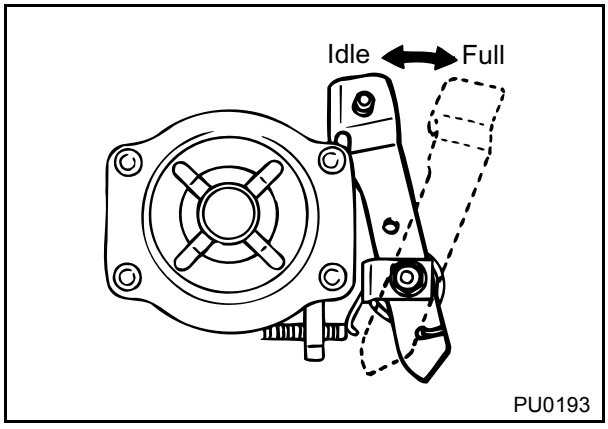

Donated by Onur Azeri . cruisercult.com

If the measurement is out of standard, adjust it at the shim.

REFERENCE:
Using a thinner shim increases the fuel delivery at the full load.

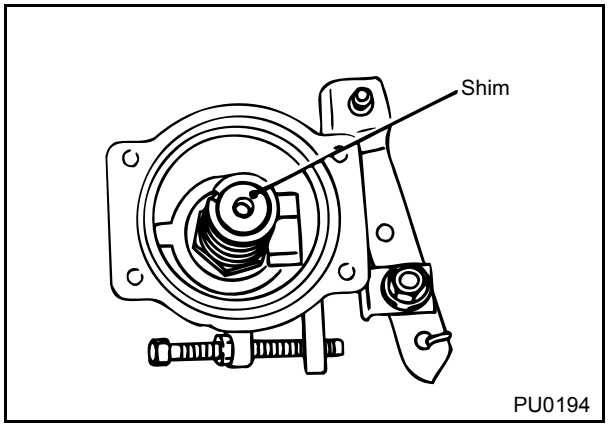

15-8. Fuel Delivery Adjustment
[Example of a Test Specification]

7 ADJUSTMENT OF FUEL DELIVERY					Applying 0V to TCV
Lever Position (deg)	Pump Speed (rpm)	Positive Pressure (mmHg)	Fuel Delivery (cc/200st)	Max. Spread in Delivery (cc/200st)	Remarks
28.5 ± 5 ° (Full)	1200	-	12.7 ± 0.1=A	0.4	By full load setting screw
	2450	-	5.4 ± 0.5	-	By max. spread setting screw
	2300	-	8.5 ± 0.8	-	
	2700	-	≦ 1.0	-	
	100	-	16.0 ± 2.0	1.4	By governor sleeve plug
	500	-	11.0 ± 0.4	0.5	
	2000	-	12.2 ± 0.4	0.5	

(1) Nominal full-load fuel delivery setting

[1] Adjust the full-load set screw so that the nominal full-load fuel delivery will attain the specified value.

[2] If the amount of imbalance is out of standard, replace the delivery valve and the valve spring, or inspect the installed condition of the delivery valve gasket.

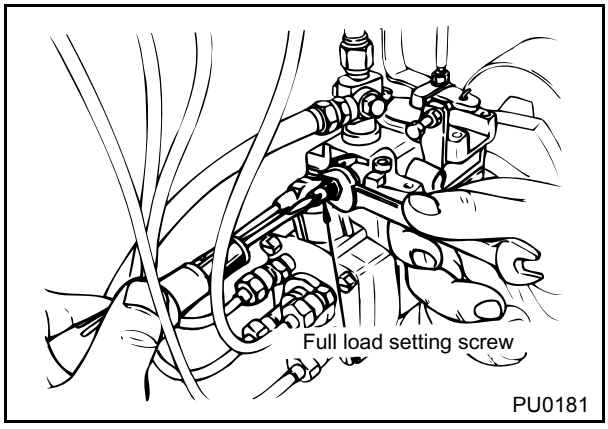

Donated by Onur Azeri . cruisercult.com

(2) High-speed lever setting

Adjust the maximum speed set screw to obtain the specified fuel delivery at the specified pump speed.

REFERENCE:

Tighten the screw to decrease the fuel delivery.

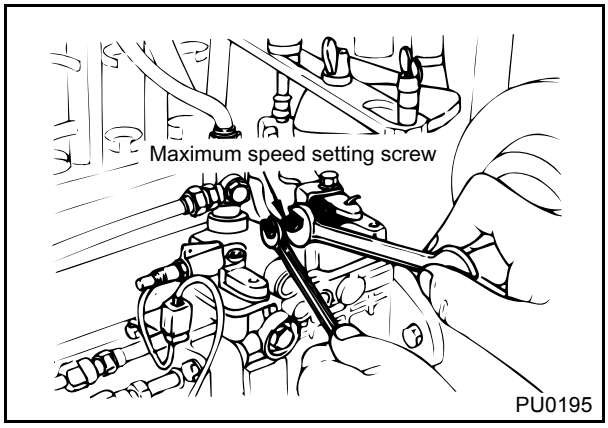

(3) Injection volume adjustment (Verify)

[1] Verify that the specified fuel delivery can be obtained at the specified speed.

[2] If the starting enrichment fuel delivery is out of standard, adjust it by replacing the governor sleeve plug.
Increasing the dimension L of the governor sleeve plug by 0.2mm decreases the fuel delivery by 1.6cm^3/200st.
Eight types of governor sleeve plugs are available, in 0.2mm increments as shown in the table below.

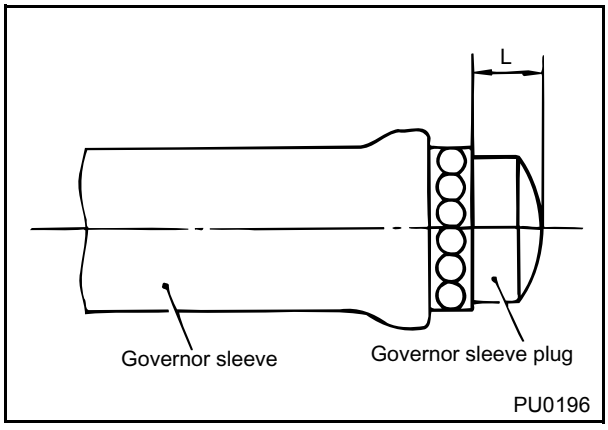

Governor Plug Types

DENSO P/N	Length (L) mm
096256-0140	4.3
096256-0150	4.5
⋮	(every 0.2mm)
096256-0290	7.3

[3] If the amount of imbalance is out of standard, replace the delivery valve, delivery valve spring, etc.

[4] If the fuel delivery at 500 and 2,100 rpm is out of standard, replace the governor lever assembly.

Donated by Onur Azeri . cruisercult.com

15-9. Load Sensing Timer Adjustment

[Example of a Test Specification]

8 SETTING OF LOAD SENSING TIMER				Applying 0V to TCV
Lever Position (deg)	Pump Speed (rpm)	Positive Pressure (mmHg)	Fuel Delivery (cc/200st)	Remarks
Start of Load Sensing	1200	-	(A-1.0) ± 0.4	By governor shaft
End of Pressure Drop	1200	-	8.9 ± 0.2	Check
Check Points	1. Piston Travel at End of Pressure Drop. : 2.17 ± 0.5mm (Pump speed 1200rpm) 2. Dimension of governor shaft : L=1.25 ± 0.75mm			

(1) Activation Setting

[1] Rotate the pump at the specified speed, and slowly tilt the adjusting lever from the full position to the idle side. Secure the lever at the position (A) when the pump's internal pressure starts to drop as shown in the diagram on the right, and measure the fuel delivery to determine if the specified fuel delivery can be obtained.

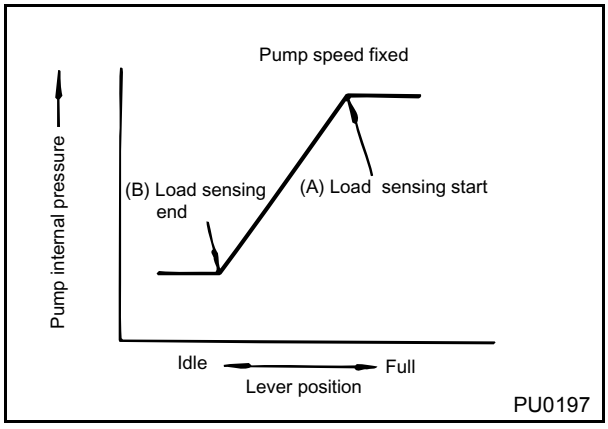

[2] If the measurement is out of standard, adjust it at the governor shaft. Perform the lever setting described in step [1] again to measure the specified fuel delivery.

[3] The diagram on the right shows the relationship between the governor shaft screwed-in angle and the changes in the fuel delivery.

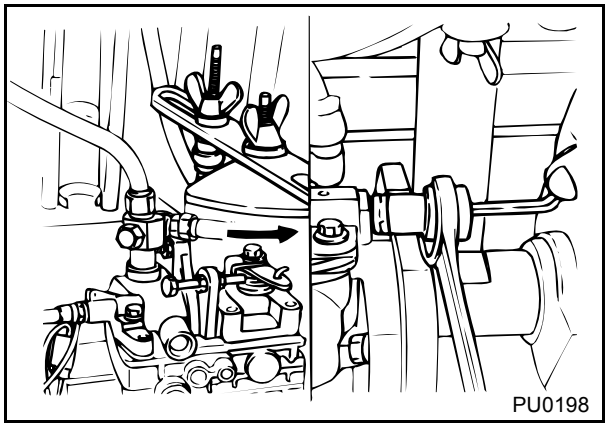

- **Adjustment Method**

  If the fuel delivery is small, screw it out by turning the governor shaft clockwise. If it is large, turn it counterclockwise to screw it in.

Donated by Onur Azeri . cruisercult.com

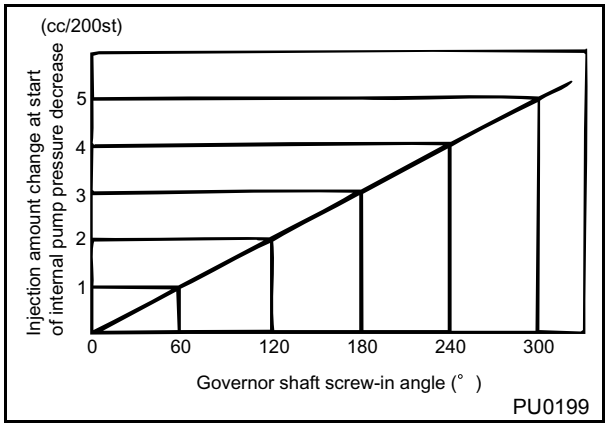

(2) Activation end setting

Rotate the pump at the specified speed, and slowly tilt the adjusting lever from the idle position to the full side. Secure the lever at the position (B) when the pump's internal pressure starts to rise as shown in Fig. PU0197, and measure the fuel delivery to determine if the specified fuel delivery can be obtained.

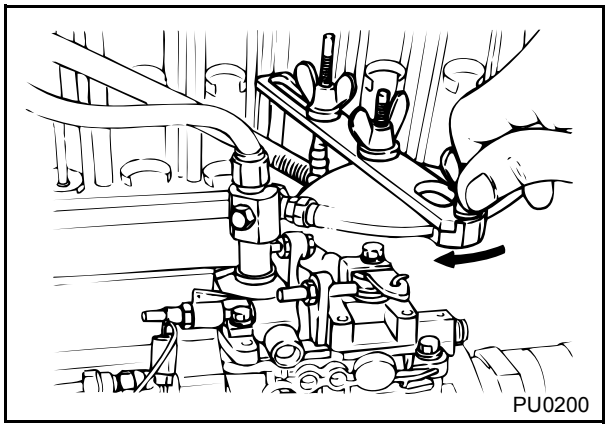

(3) Verifying the change in the timer stroke

Rotate the pump at the specified speed, tilt the adjusting lever from the full position to the idle side, and verify that the change in the timer piston stroke is within standard.

NOTE:

Depending on the model, there are two ways to measure the timer stroke: to measure the maximum amount of change, or to measure the absolute value of the change.

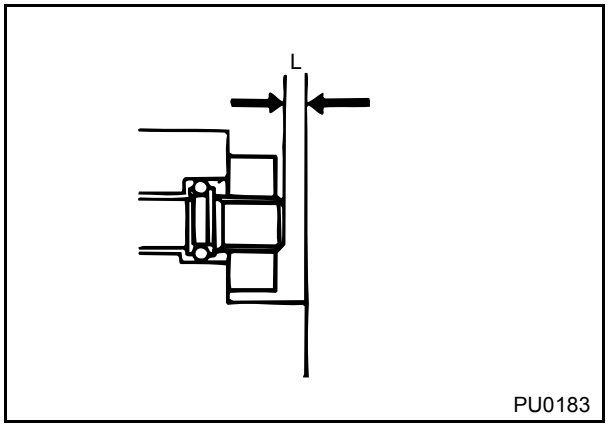

(4) Governor shaft position check

After completing the load sensing timer adjustment, verify that dimension L is 1.25 ± 0.75mm.

Donated by Onur Azeri . cruisercult.com

15-10. Low-Speed Lever Setting

[Example of a Test Specification]

9 SETTING OF ADJUSTING LEVER AT LOW SPEED					
Lever Position (deg)	Pump Speed (rpm)	Positive Pressure (mmHg)	Fuel Delivery (cc/200st)	Max. Spread in Delivery (cc)	Remarks
-15.5 ± 5 °	435	0	3.5 ± 1.5	1.3	Lever setting
(Idlle)	400	0	A	-	A = Measurement

[1] Release the adjusting lever, which was secured during the running-in operation.

[2] Adjust the idle adjusting screw so that the specified fuel delivery can be obtained at the specified speed.

REFERENCE:
Tightening the screw increases the fuel delivery.

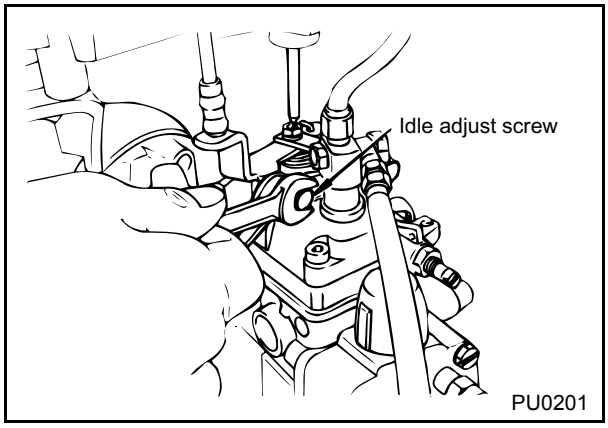

[3] Verify that the lever angle between the full and idle positions is within standard.

[4] If the lever angle is not within standard, select and use another adjusting lever.

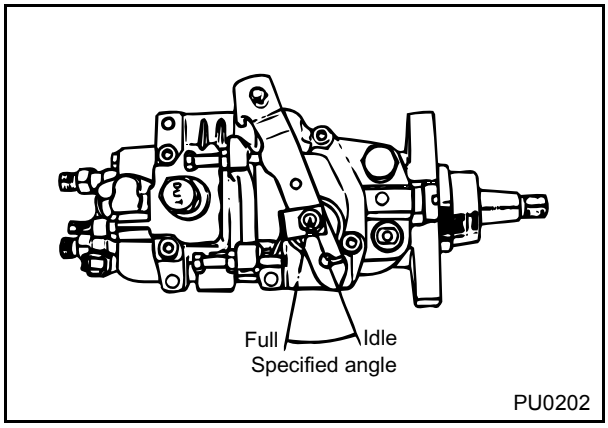

■ For a lever with dash pot:

[Example of a Test Specification]

9 SETTING OF ADJUSTING LEVER AT LOW SPEED					D/P : Dash Pot
Lever Position (deg)	Pump Speed (rpm)	Positive Pressure (mmHg)	Fuel Delivery (cc/200st)	Max. Spread in Delivery(cc)	Remarks
-17.5 ± 5 °	360	-	8.5 ± 0.5=A	-	D/P adjustment (unscrewed)
(Idlle)	360	-	(A+0.8) ± 0.3	-	D/P adjustment (screw tightened)
	360	-	3.0 ± 1.5	1.3	Lever setting

Donated by Onur Azeri . cruisercult.com

(1) Pre-setting (dash pot screw-out setting)
Loosen the dash pot locknut and screw out the dash pot sufficiently so that it will not activate. Then, rotate the pump at the specified speed, adjust the adjusting lever to attain the specified fuel delivery, and secure it temporarily.

(2) Dash pot screw-in setting
At the adjusted lever position, rotate the pump at the specified speed, and screw in the dash pot to attain the specified fuel delivery.

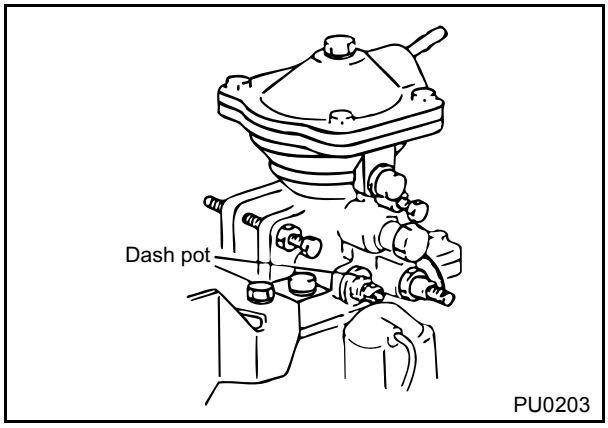

(3) Low-speed lever setting
Rotate the pump again at the specified speed, adjust the adjusting lever, and verify whether the fuel delivery is within standard (if it is not, repeat the steps starting from "(1) Pre-setting").

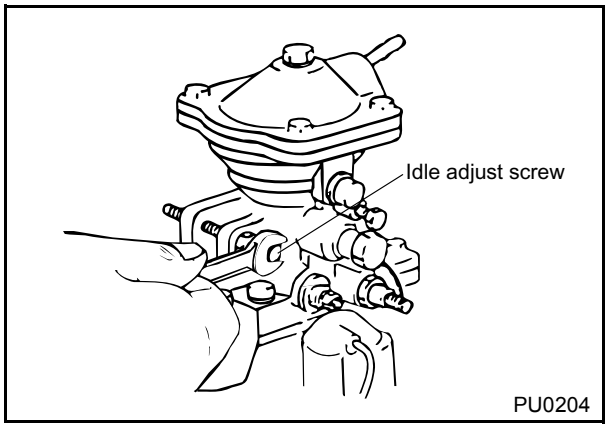

15-11. Partial Setting
"Partial setting" is a process for verifying the end of the effectiveness of the idle spring. From the lever condition given in the Test Specification, increase the pump speed to the specified rpm and verify the Q difference in order to check whether the idle spring is functioning properly (which is to check the free length of the idle spring).
[Example of a Test Specification]

10 SETTING OF ADJUSTING LEVER AT PARTIAL RANGE			
Pump Speed (rpm)	Positive Pressure (mmHg)	Fuel Delivery (cc/500st)	Remarks
400	450	10.0 ± 0.4=C	Lever setting
475	450	(C-6.2) ± 2.0	

[1] At the specified pump speed of 400 rpm, apply a boost pressure of 60.0 kPa (450 mmHg), and set the adjusting lever to the position in which the specified fuel delivery of 10.0 ± 0.4 = C cm^3/500st is injected.

[2] From that state, increase the pump speed to the next specified pump speed of 475 rpm, and verify the difference in the fuel delivery (C - 6.2) ± 2.0 cm^3/500st). If the fuel delivery is out of standard, replace the idle spring. If the is larger than the standard, use a shorter idle spring, and if the fuel delivery is smaller, use a longer idle spring.

15-12. ACSD Adjustment

Donated by Onur Azeri . cruisercult.com

[Example of a Test Specification]

11 CHARACTERISTIC OF A.C.S.D				
Lever Position (deg)	Pump Speed (rpm)	Positive Pressure (mmhg)	Measuring value	Remarks
Idle	360	-	0.1 ± 0.2	Piston travel (mm)
	360	-	(B*-1.6) ± 0.3	Idle-up quantity(cc/500st)
				Fuel temperature : 40 ± 1 ℃

*B: Actual fuel delivery measurement during the low-speed lever setting

(1) Preparation

[1] Hose set (hose A, hose B, hose clamps)
for FIP-12C (part number: 95095-10450)
for ND-CPS (part number: 95095-10460)

[2] Spacer set (O-ring, spacer plate, bolts)
(part number: 95095-10470)

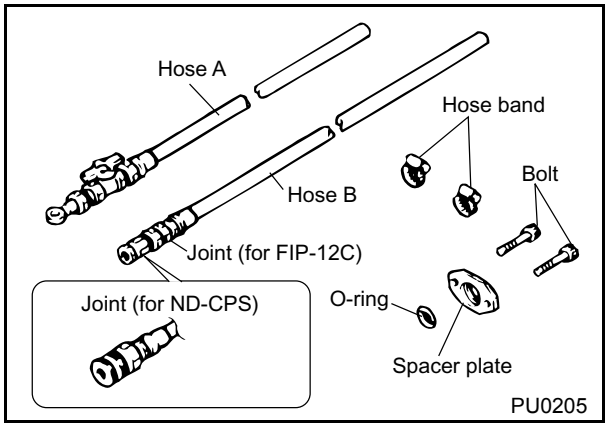

(2) Adjustment

NOTE:
An ACSD adjustment is performed by connecting the hoses as shown in the diagram on the right, after performing the normal pump adjustment.

After adjusting the pump, immediately perform the ACSD adjustment so that the timer stroke and the idle-up fuel delivery will be within standard.

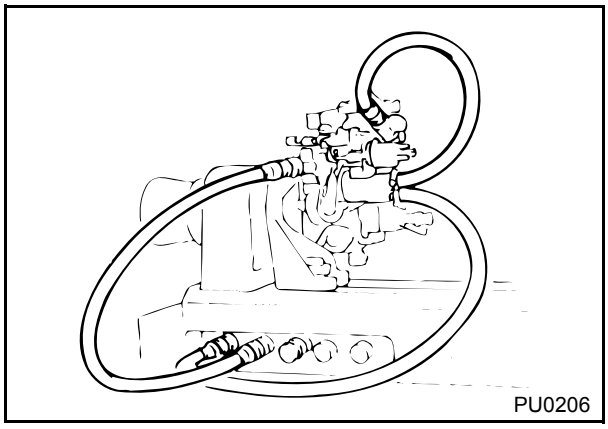

NOTE:
On pumps with minus timer stroke adjustment values, the timer piston moves to the retard side and comes in contact with the timer measuring device. Therefore, after performing the "0" adjustment on the timer measuring device, attach a 5mm spacer plate as shown in the diagram on the right, in order to adjust the timer stroke.
If the adjustment value is -0.2, the addition of the 5mm spacer plate results in a timer measuring device value of 4.8mm.

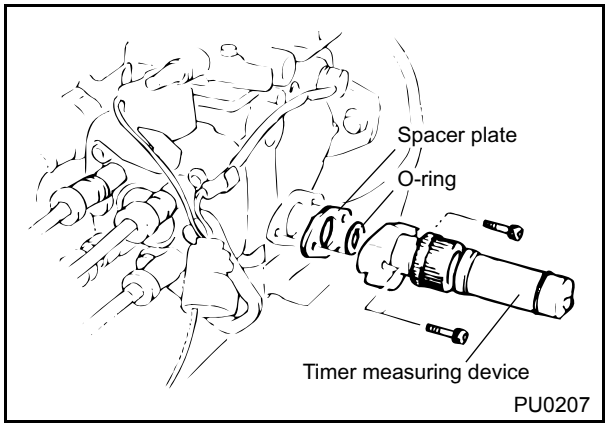

Donated by Onur Azeri . cruisercult.com

[1] Timer stroke
When the advance is large: tighten the adjusting screw.
When the advance is small: loosen the adjusting screw.

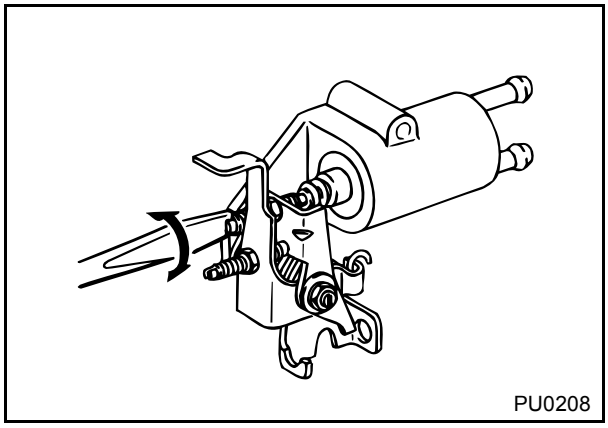

[2] Idle-up fuel delivery
When larger than standard: loosen the adjusting screw
When smaller than standard: tighten the adjusting screw

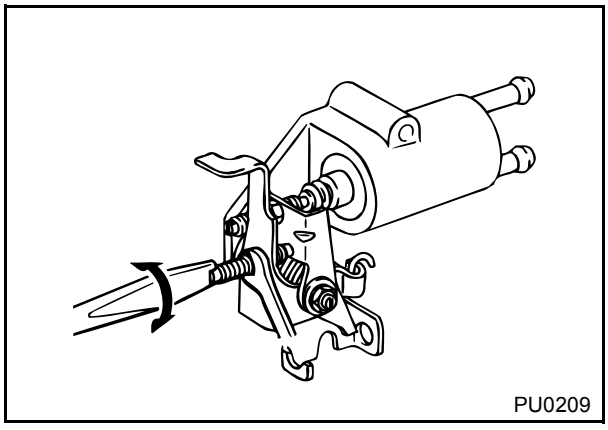

(3) ACSD air-tightness check
Connect one of the coolant inlets of the ACSD to the fuel supply on the test bench. Close the other inlet with the valve. Apply test oil pressurized to 294 kPa (3 kgf/cm^2) for 10 seconds to verify the absence of any leakage.

NOTE:
After completing the adjustment, blow compressed air to remove the diesel fuel from inside the ACSD.

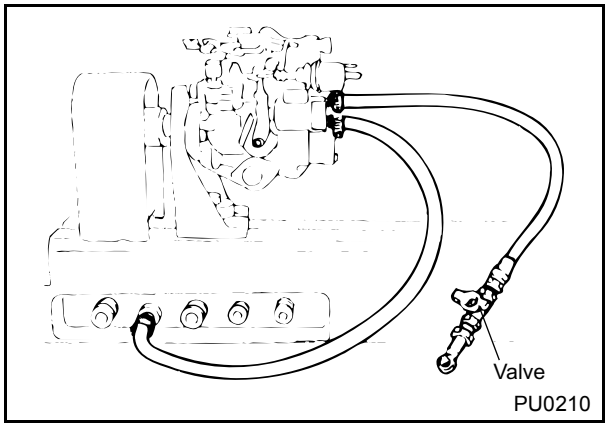

(4) Punch mark
After adjusting the ACSD, punch a "0" mark on the ACSD housing.

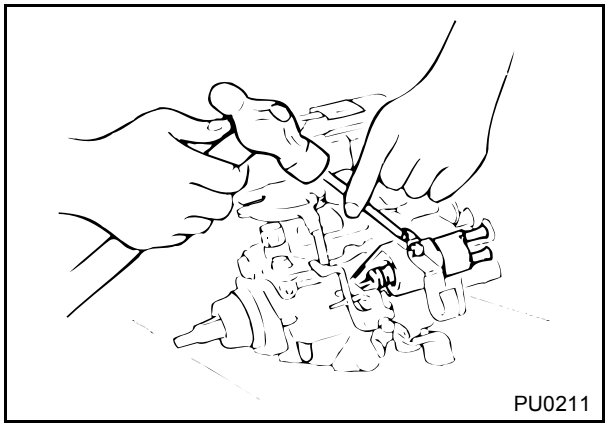

Donated by Onur Azeri . cruisercult.com

15-13. TCV Adjustment

[Example of a Test Specification]

12 ADJUSTMENT OF T.C.V				
Lever Position (deg)	Pump Speed (rpm)	Positive Pressure (mmhg)	Piston Travel (mm)	Remarks
End of Pressure Drop	1200	-	2.1 ± 0.2	With applying voltage (12 ± 0.1V)

Align the adjusting lever to the specified lever position. Then, apply the specified voltage to the TCV to verify the stroke of the timer piston.

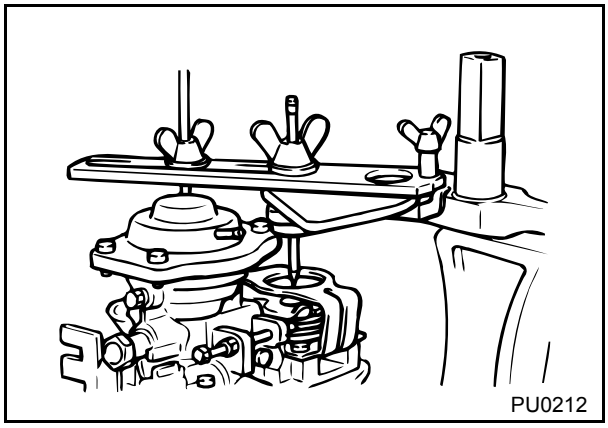

15-14. Rotary Position Sensor (RPS) Adjustment

[Example of a Test Specification]

13 RPS ADJUSTMENT				Applying 0V to TCV, Applying 5 ± 0.01V to sensor	
Lever Position (deg)	Pump Speed (rpm)	Positive Pressure (mmHg)	Fuel Delivery (cc/500st)	Sensor Output Voltage (V)	Remarks
-	1000	-	36.5 ± 0.5	VA=VC × 0.4	Set point
Full	-	-	-	VA=VC × 0.19	Check point
Idle	-	-	-	VA=VC × 0.73	Check point

REFERENCE:

Depending on the model, there are types of RPS that are set at one of three points: full, idle, or partial.

Donated by Onur Azeri . cruisercult.com

(1) Adjustment tools

Part Name	DENSO P/N	
DST-1 (as a digital circuit tester)	95170-00030	PU0216
Power supply	95095-10160	PU0217
Check harness*	95095-20510	PU0218
Sub harness	95095-20590	PU0219

*The check harness differs by manufacturer and model. Use a check harness in combination with a sub harness as necessary.

(2) Adjustment procedure (for 096000-3770, 3780)

[1] Remove the RPS, and place the angle graduation plate on the adjusting lever.

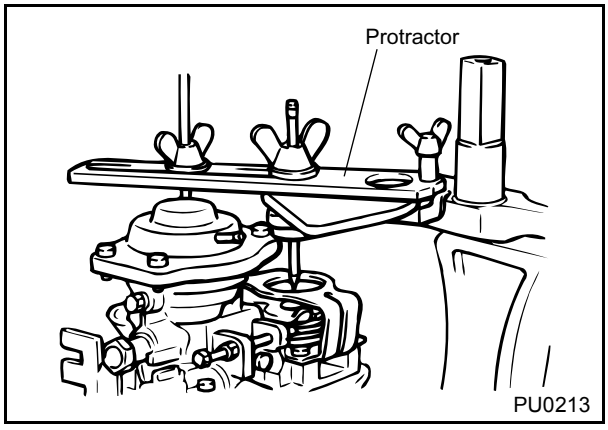

Donated by Onur Azeri . cruisercult.com

[2] Install the RPS, rotate the pump at the specified speed, adjust the adjusting lever and secure it to the position in which the specified fuel delivery is attained (set point).

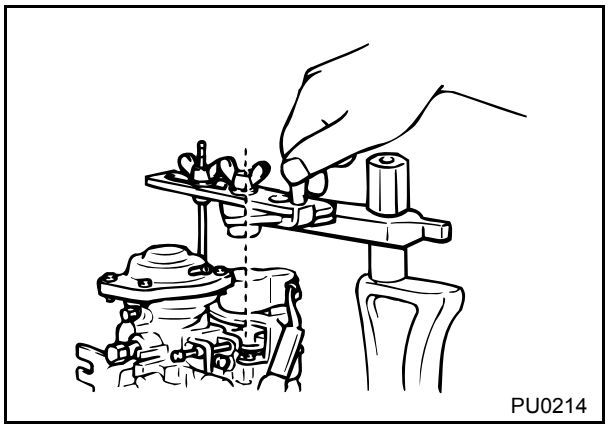

[3] Connect the check harness to the RPS connector (if the connector does not fit, connect it by way of a sub harness).

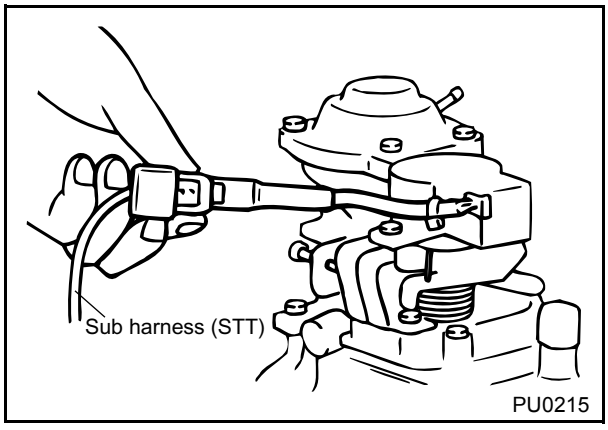

[3] Connect the power supply to DST-1 in order to wire the circuit as shown in Fig. PU0220.

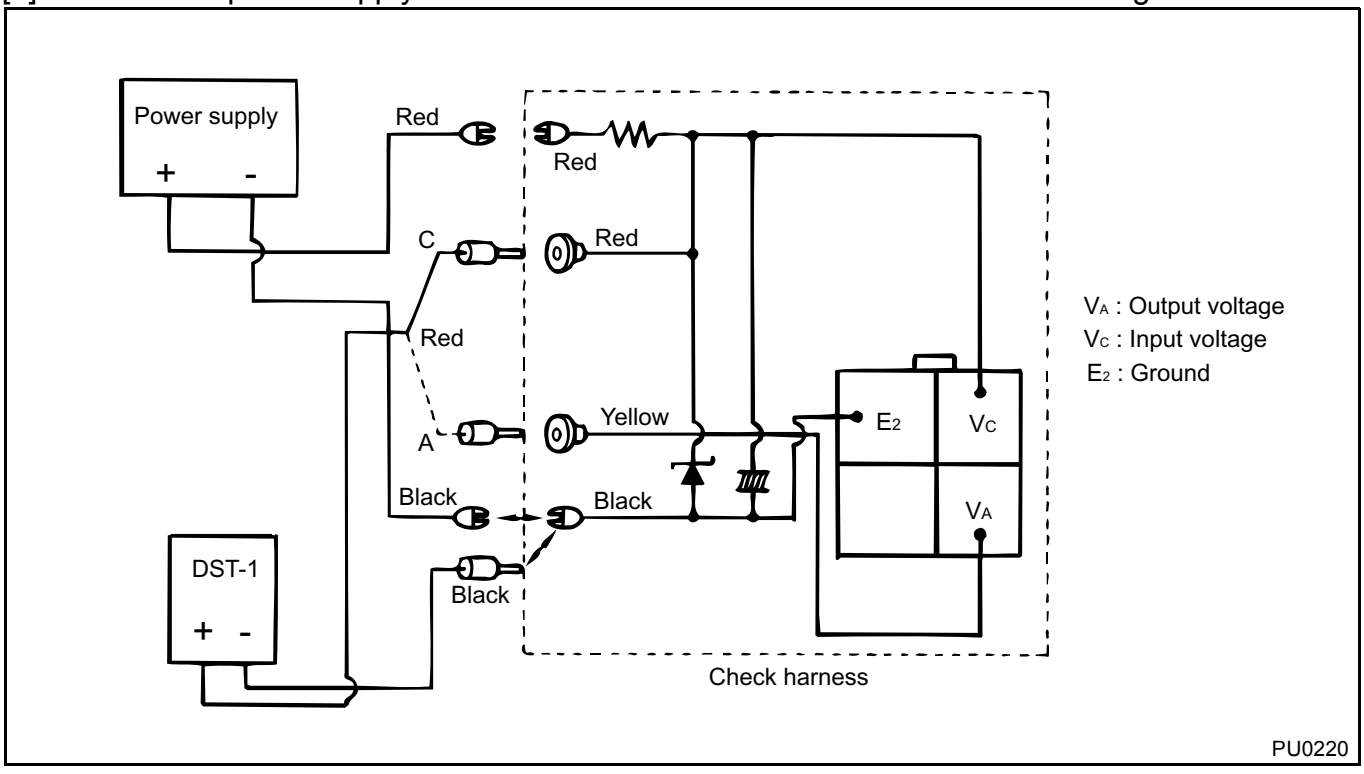

Donated by Onur Azeri . cruisercult.com

[4] Turn the power supply switch ON, and the voltage selector switch to 12V (wait 2 or 3 minutes until the voltage stabilizes).

[5] Connect "C" as shown in Fig. PU0220, and measure the voltage V_C (verify that the voltage indication has been stabilized).

[6] Connect "A" as shown in Fig. PU0220, and measure the voltage V_A.

[7] Rotate the RPS to attain $V_A = V_C \times 0.513$*, and secure it in place.

* The coefficient "0.513" varies by model. For the correct coefficient, refer to the individual Test Specification.

[8] The adjustment range is ± 1 of the last digit shown on the circuit tester.

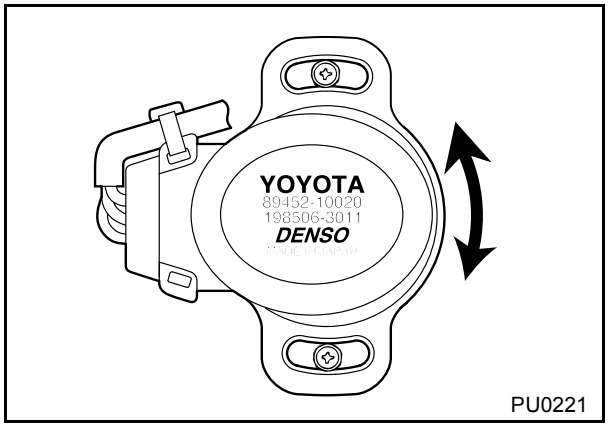

PU0221

REFERENCE:
If V_C = 12.01 (V),
V_A = 12.01 × 0.513 = 6.16 (V)
hence, the adjustment range is 6.15 to 6.17 (V)

[9] After completing the adjustment, verify voltage V_A.

15-15 PCS Adjustment
[Example of a Test Specification]

15 ADJUTMENT OF POWER CONTROL				
Lever Position (deg)	Pump Speed (rpm)	Boost Pressure (mmHg)	Fuel Delivery (cc/200st)	Remarks
26 ± 5 ° (Full)	1100	-	15.8 ± 0.3	With applying -500mmHg to power control actuator

Other than adjusting the fuel delivery at full, adjust it in the same way as on the previous VE pump, with the PCS lever tilted to the distributor head.

(1) Fuel delivery adjustment at full

[1] Adjust the in-house by applying the specified vacuum (-60.0 to -66.7 kPa〈-450 to -500 mmHg〉) to the actuator.

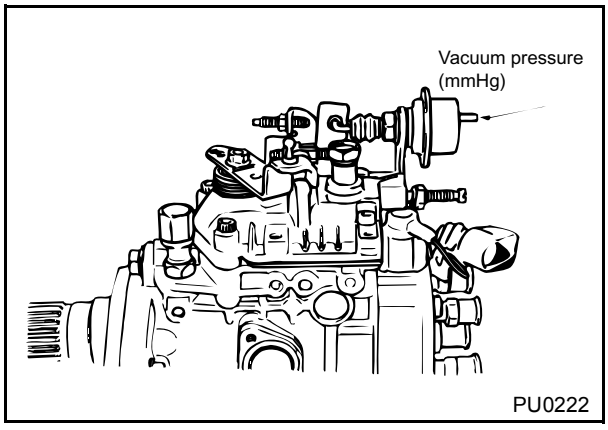

PU0222

Donated by Onur Azeri . cruisercult.com

[2] Measure the fuel delivery without applying a vacuum to the actuator.

[3] Adjust the adjusting screw to bring the fuel delivery within standard.

REFERENCE:
Screw in the adjusting screw to increase the fuel delivery.
Screw out the adjusting screw to decrease the fuel delivery.

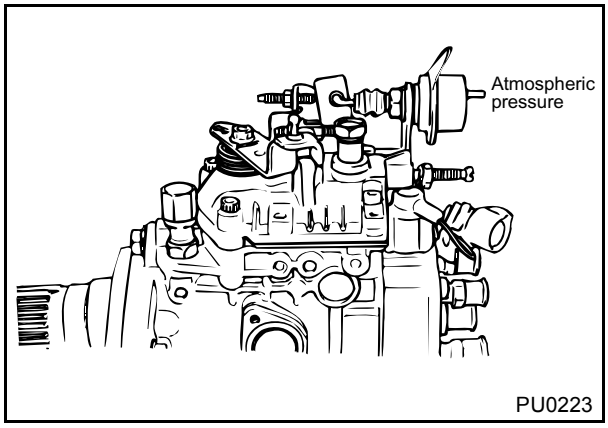

(2) Adjustment completion verification
After completing the adjustment, apply a vacuum (-60.0 to -66.7 kPa〈-450 to -500 mmHg〉) to the actuator to verify that there is a minimum clearance of 3mm between the PCS lever and the adjusting screw.

NOTE 1:
The PCS fuel delivery is an important element, and it should be adjusted to within standard.

NOTE 2:
Be aware that depending on the model, the instances in which the actuator is opened to the atmosphere or a vacuum is applied could be reversed. Also, the position in which the actuator is installed could differ.

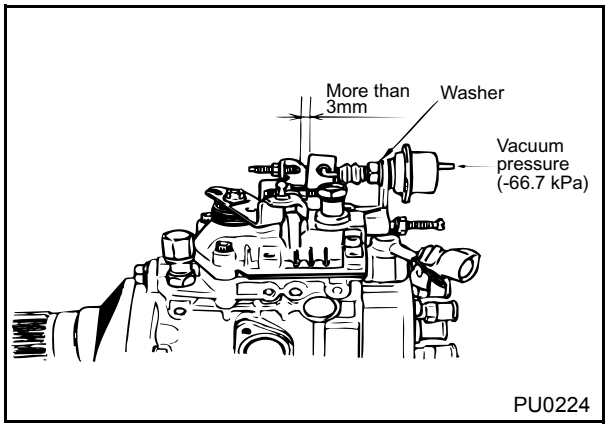

Donated by Onur Azeri . cruisercult.com

16. End of Volume Material

■ Sealing the Full-Load Stopper of the VE Pump

(1) Wire type sealing (currently unused most of the time)

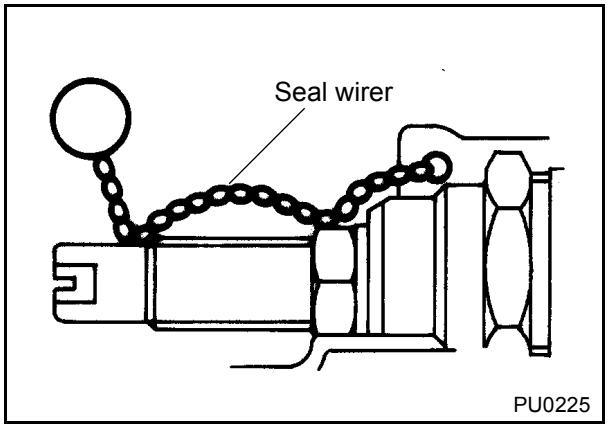

(2) Collar type sealing

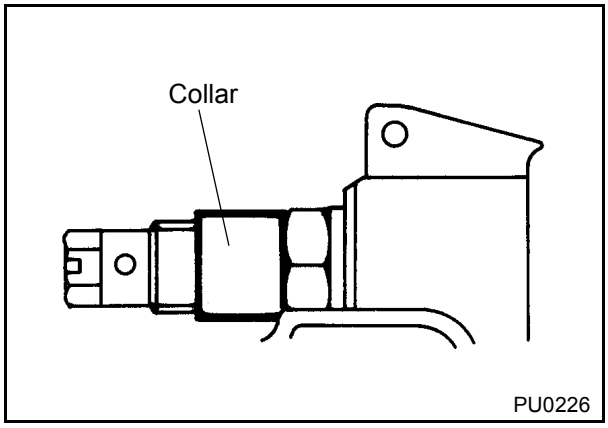

Resealing method:
Using the provided (STT), reseal (by crimping) a new split collar.

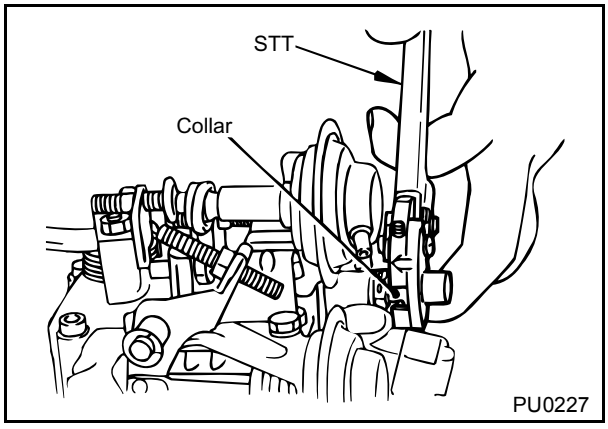

Donated by Onur Azeri . cruisercult.com

(3) Cap type sealing

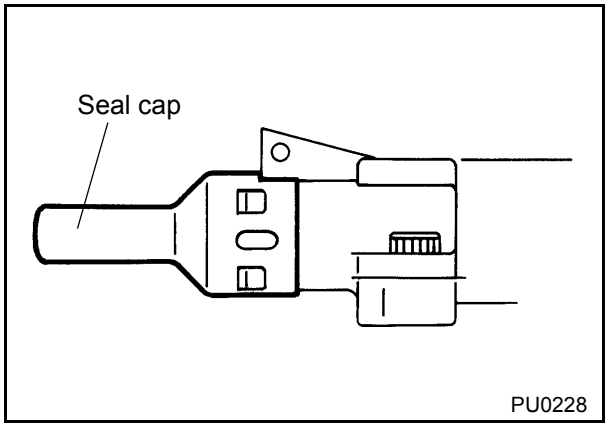

Resealing method:
Using a plastic hammer, lightly tap on the head of the seal cap to install the cap on the pump. At this time, make sure that the hook portion of the cap is secured to the washer.

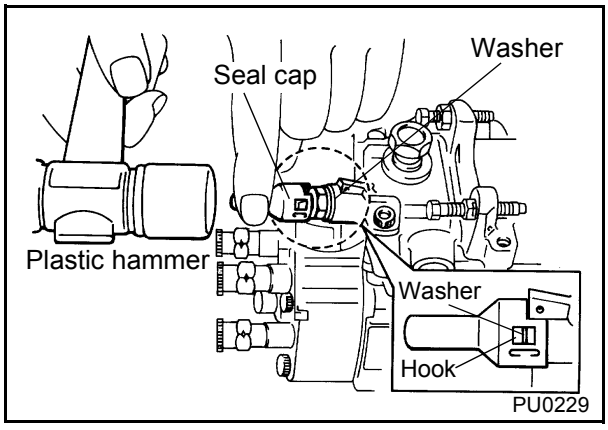

Donated by Onur Azeri . cruisercult.com