(Cont. next page)

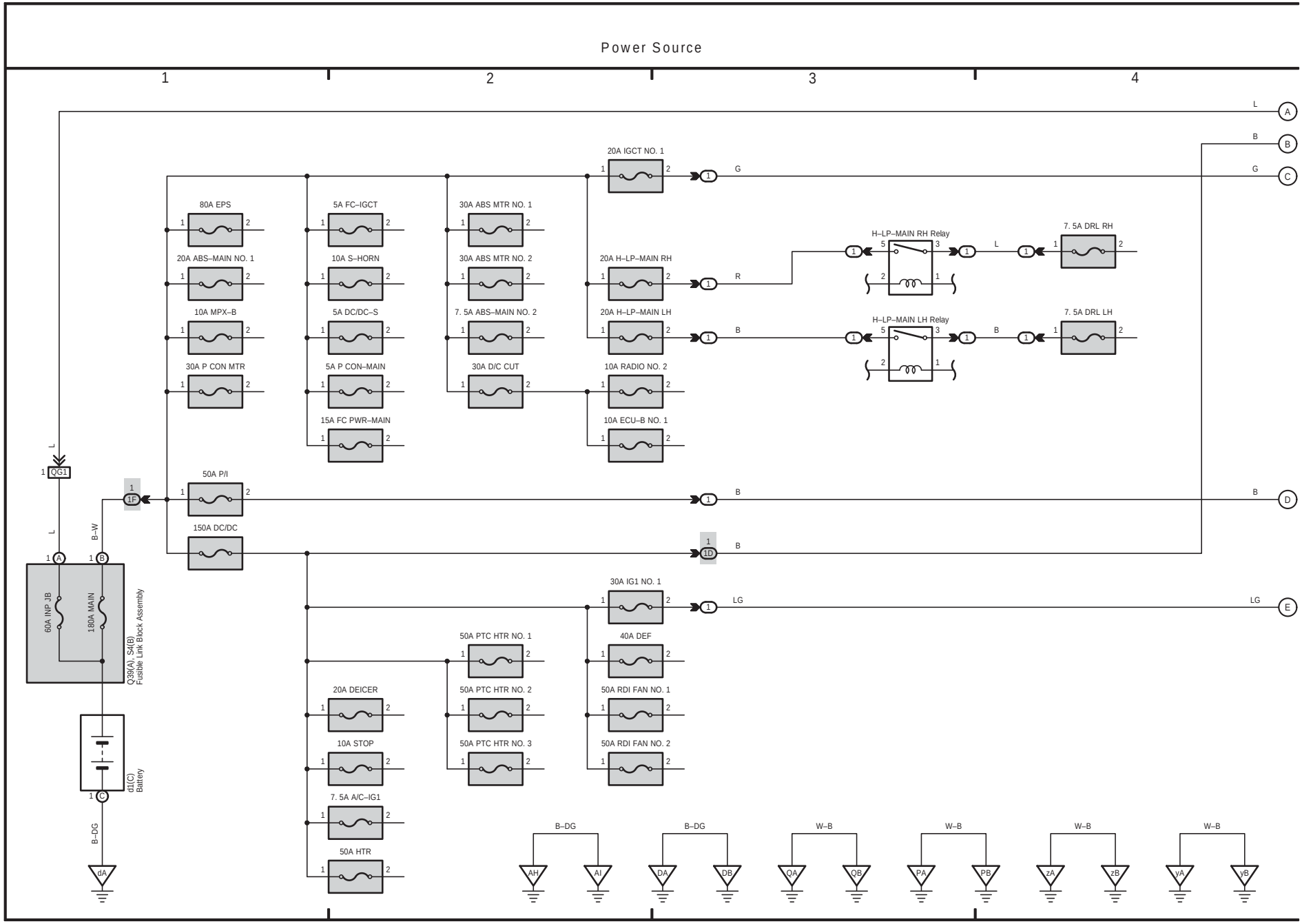

(Cont. next page)

Power Source

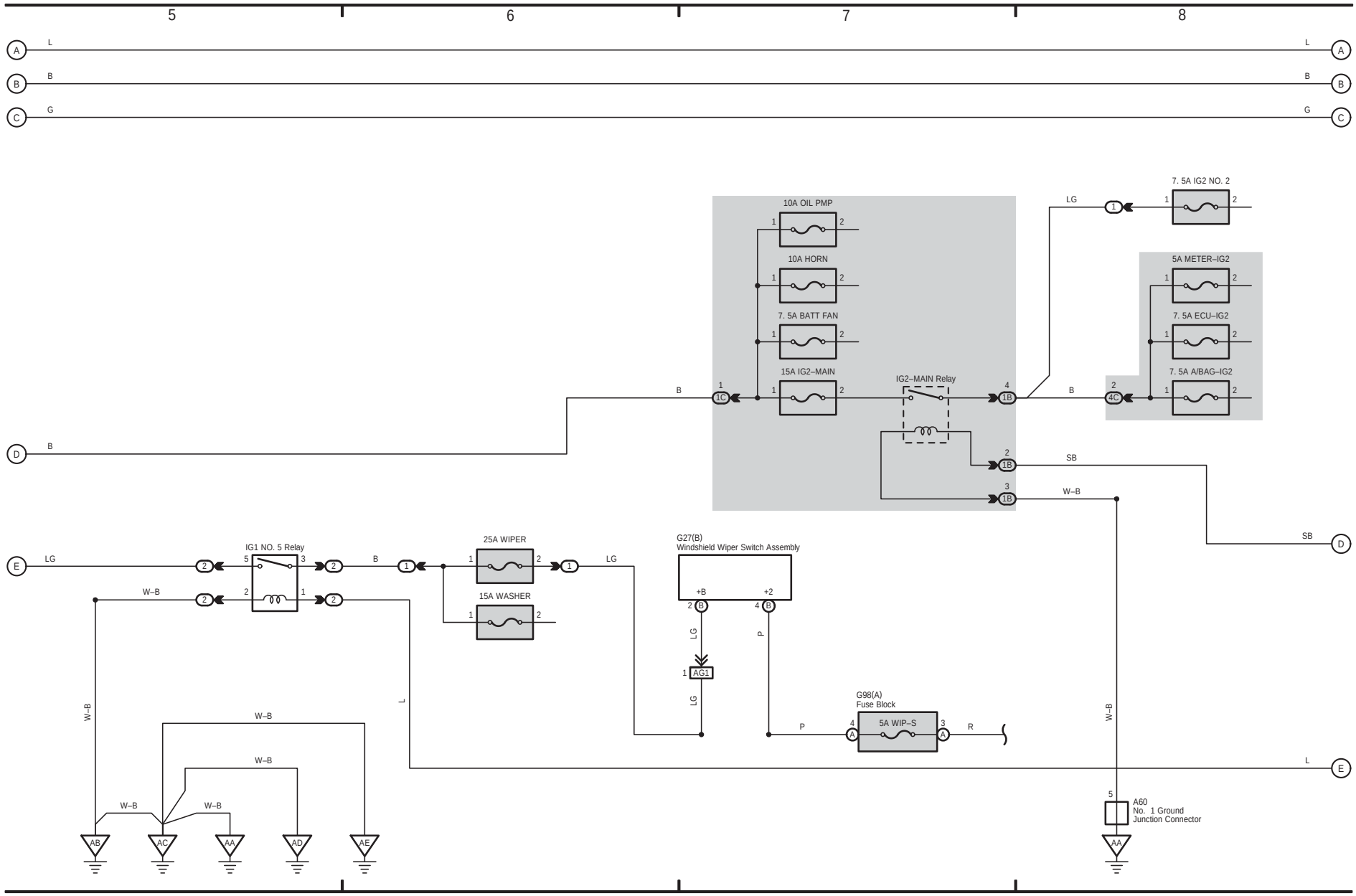

(Cont. next page)

Power Source

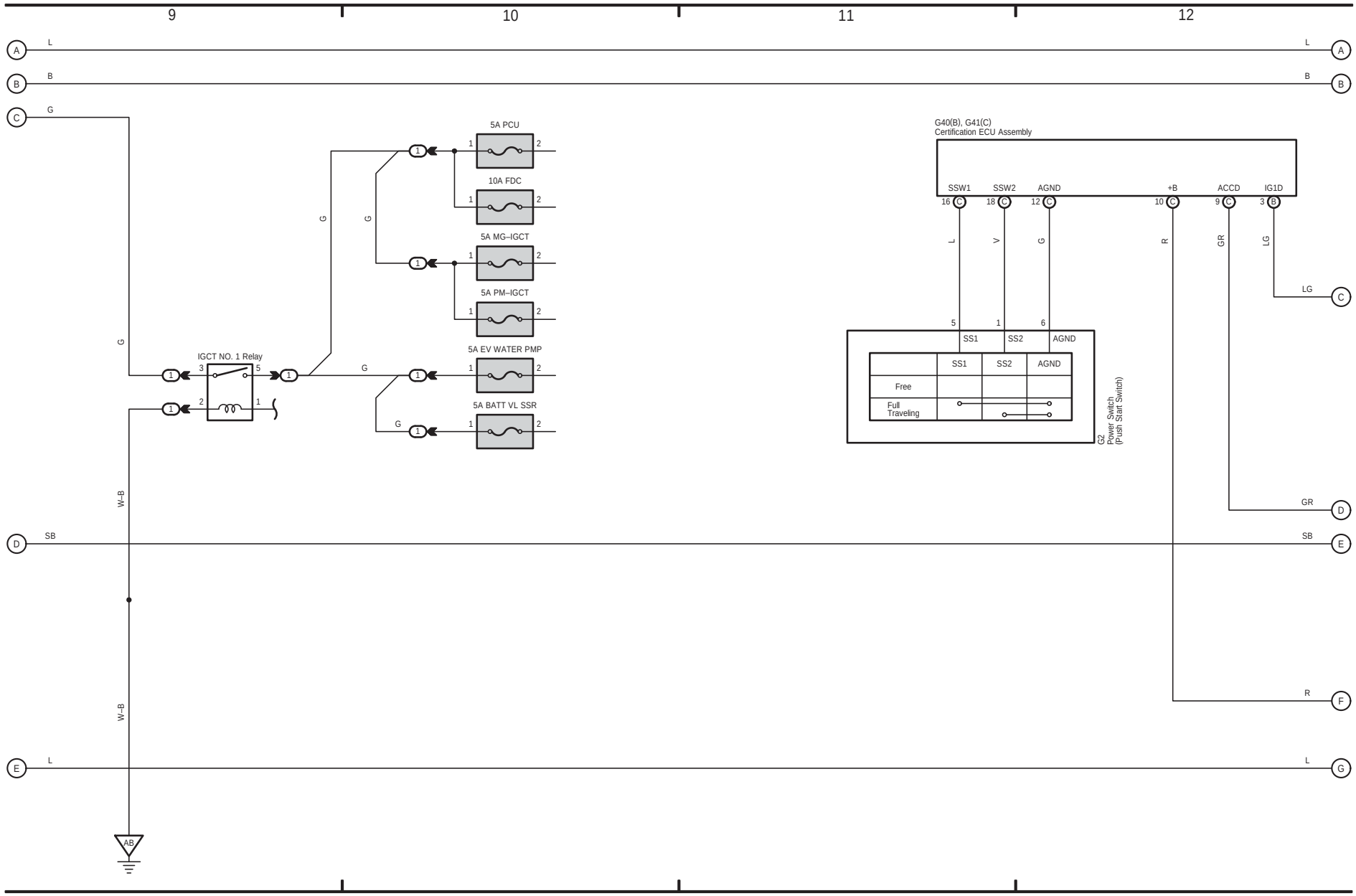

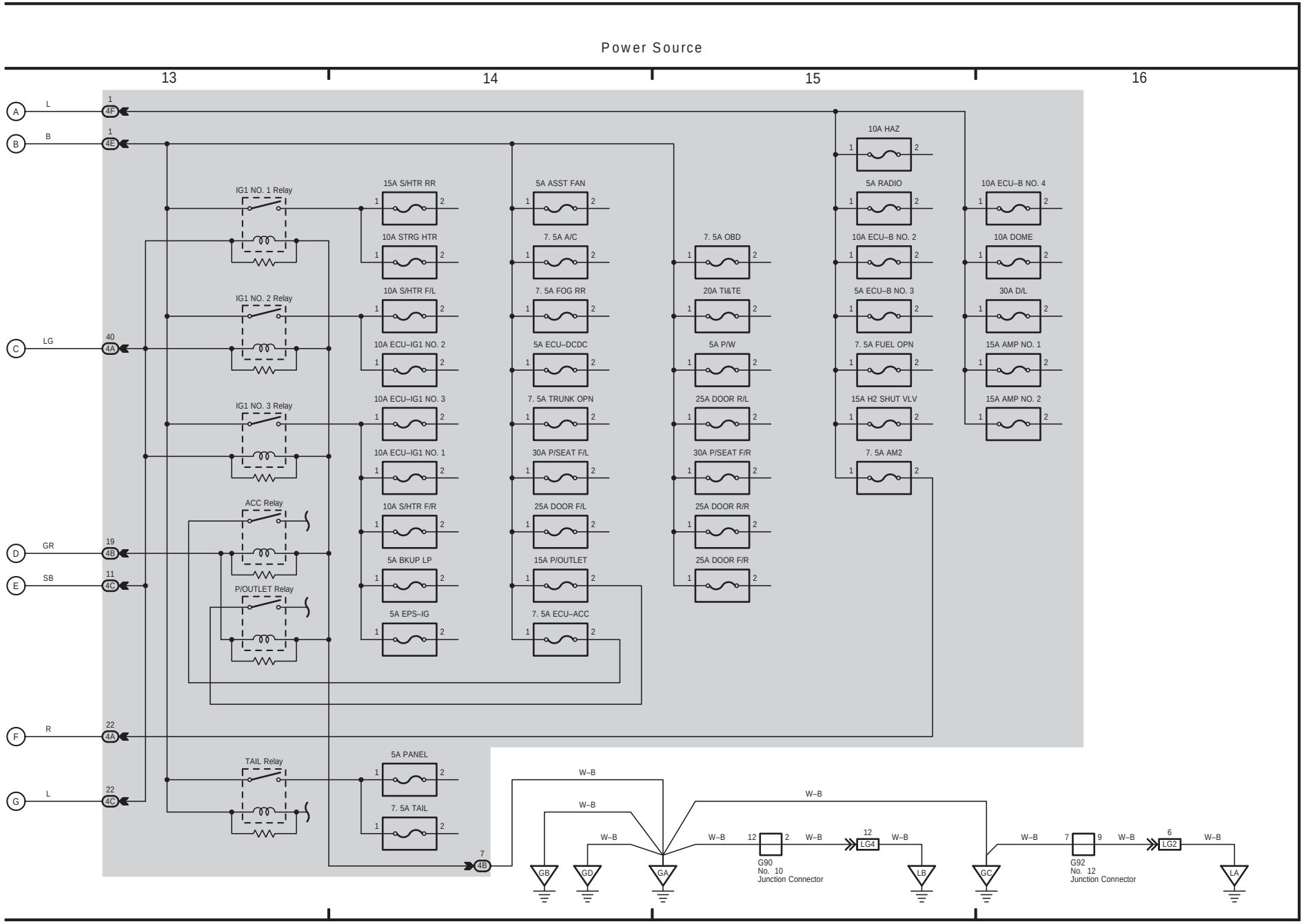
Power Source
13
14
15
16
A
L
1
4F
B
B
1
4E
C
LG
40
4A
D
GR
19
4B
E
SB
11
4C
F
R
22
4A
G
L
22
4C
IG1 NO. 1 Relay
IG1 NO. 2 Relay
IG1 NO. 3 Relay
ACC Relay
P/OUTLET Relay
TAIL Relay
15A S/HTR RR
10A STRG HTR
10A S/HTR F/L
10A ECU–IG1 NO. 2
10A ECU–IG1 NO. 3
10A ECU–IG1 NO. 1
10A S/HTR F/R
5A BKUP LP
5A EPS–IG
5A PANEL
7. 5A TAIL
5A ASST FAN
7. 5A A/C
7. 5A FOG RR
5A ECU–DCDC
7. 5A TRUNK OPN
30A P/SEAT F/L
25A DOOR F/L
15A P/OUTLET
7. 5A ECU–ACC
7. 5A OBD
20A TI&TE
5A P/W
25A DOOR R/L
30A P/SEAT F/R
25A DOOR R/R
25A DOOR F/R
10A HAZ
5A RADIO
10A ECU–B NO. 2
5A ECU–B NO. 3
7. 5A FUEL OPN
15A H2 SHUT VLV
7. 5A AM2
10A ECU–B NO. 4
10A DOME
30A D/L
15A AMP NO. 1
15A AMP NO. 2
7
4B
W–B
GB
GD
GA
12
2
G90
No. 10
Junction Connector
12
LG4
LB
GC
7
9
G92
No. 12
Junction Connector
6
LG2
LA