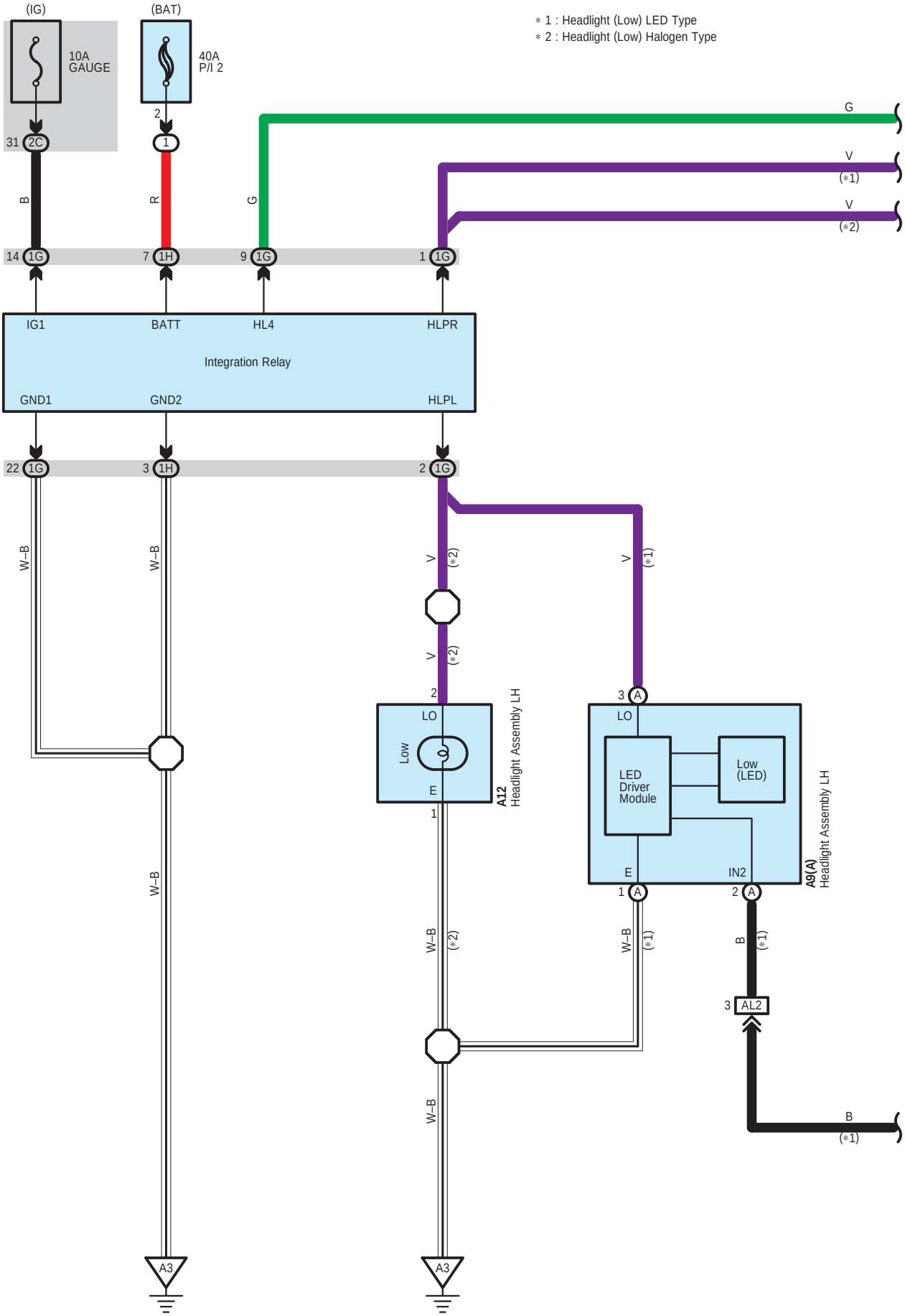
(IG)
(BAT)
10A
GAUGE
40A
P/I 2
∗ 1 : Headlight (Low) LED Type
∗ 2 : Headlight (Low) Halogen Type
31 2C
2
1
B
R
G
G
V
(∗1)
V
(∗2)
14 1G
7 1H
9 1G
1 1G
IG1
BATT
HL4
HLPR
Integration Relay
GND1
GND2
HLPL
22 1G
3 1H
2 1G
W–B
W–B
V
(∗2)
V
(∗1)
V
(∗2)
2
LO
Low
E
1
A12
Headlight Assembly LH
3 A
LO
LED
Driver
Module
Low
(LED)
E
IN2
1 A
2 A
A9(A)
Headlight Assembly LH
W–B
W–B
W–B
(∗2)
W–B
(∗1)
B
(∗1)
3 AL2
B
(∗1)
W–B
A3
A3

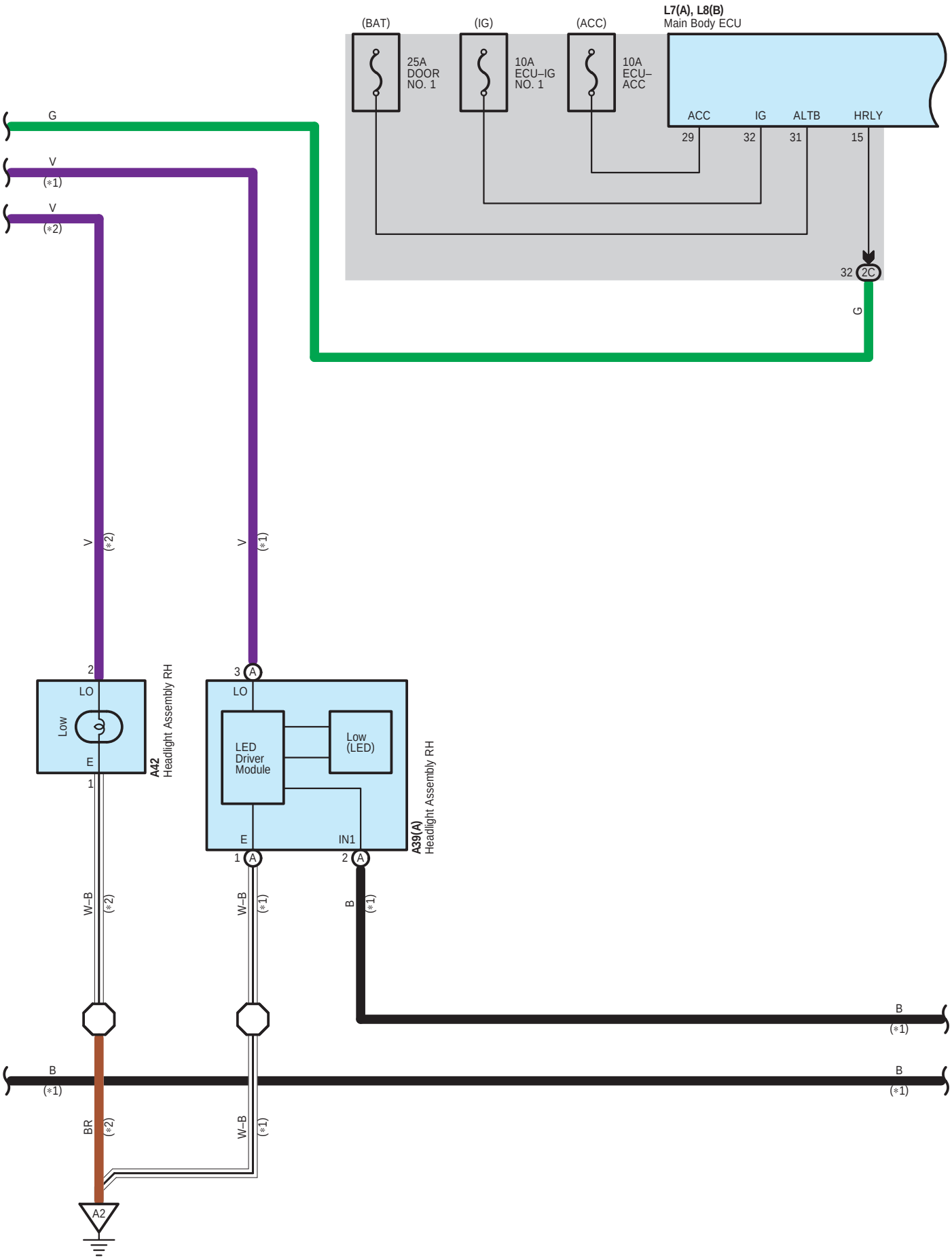
L7(A), L8(B)
Main Body ECU
(BAT)
(IG)
(ACC)
25A
DOOR
NO. 1
10A
ECU–IG
NO. 1
10A
ECU–
ACC
ACC
IG
ALTB
HRLY
29
32
31
15
32
2C
G
V
(*1)
V
(*2)
V
(*2)
V
(*1)
2
LO
Low
E
1
A42
Headlight Assembly RH
3
A
LO
LED
Driver
Module
Low
(LED)
E
IN1
1
A
2
A
A39(A)
Headlight Assembly RH
W–B
(*2)
W–B
(*1)
B
(*1)
B
(*1)
B
(*1)
B
(*1)
BR
(*2)
W–B
(*1)
A2

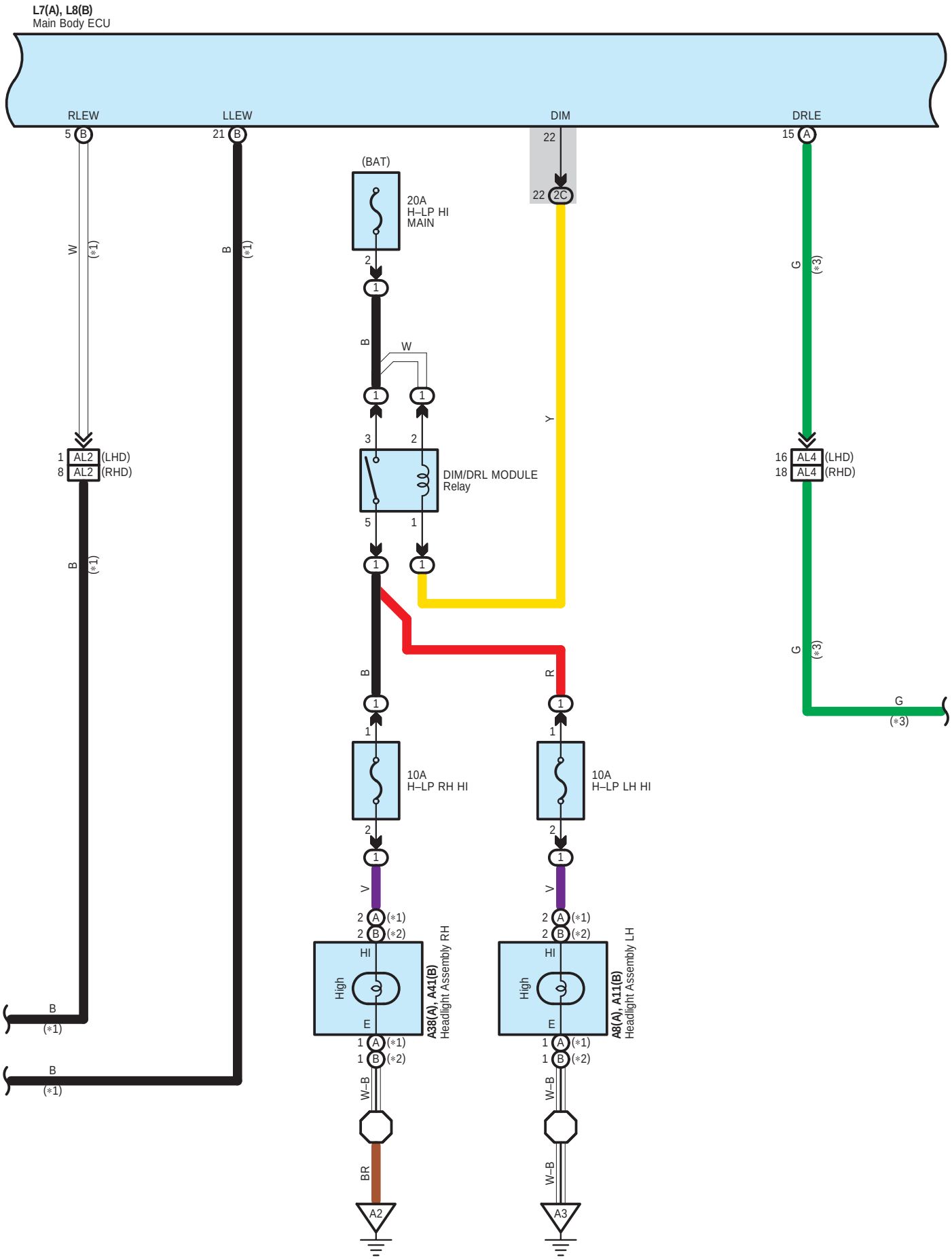
L7(A), L8(B)
Main Body ECU
RLEW
LLEW
DIM
DRLE
5 B
21 B
22
15 A
(BAT)
20A
H–LP HI
MAIN
22 2C
W
(*1)
B
(*1)
G
(*3)
W
Y
1 AL2 (LHD)
8 AL2 (RHD)
DIM/DRL MODULE
Relay
16 AL4 (LHD)
18 AL4 (RHD)
B
(*1)
G
(*3)
G
(*3)
R
10A
H–LP RH HI
10A
H–LP LH HI
V
2 A (*1)
2 B (*2)
HI
High
E
A38(A), A41(B)
Headlight Assembly RH
A8(A), A11(B)
Headlight Assembly LH
1 A (*1)
1 B (*2)
W–B
BR
A2
A3

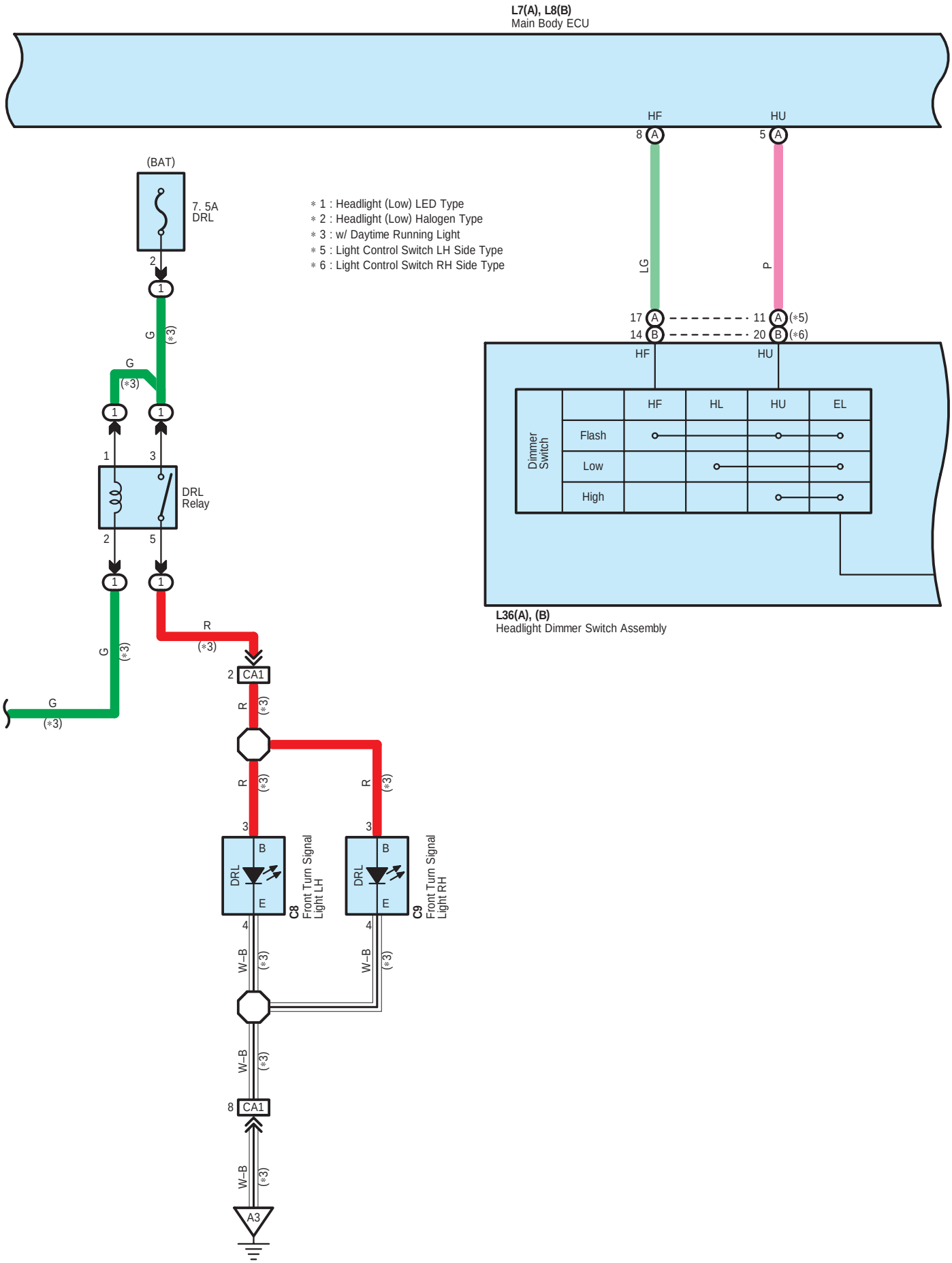
L7(A), L8(B)
Main Body ECU
HF
HU
8 A
5 A
LG
P
17 A
14 B
11 A (*5)
20 B (*6)
HF
HU
Dimmer Switch
HF
HL
HU
EL
Flash
Low
High
L36(A), (B)
Headlight Dimmer Switch Assembly
(BAT)
7. 5A
DRL
* 1 : Headlight (Low) LED Type
* 2 : Headlight (Low) Halogen Type
* 3 : w/ Daytime Running Light
* 5 : Light Control Switch LH Side Type
* 6 : Light Control Switch RH Side Type
G
(*3)
DRL
Relay
R
CA1
DRL
B
E
C8
Front Turn Signal
Light LH
C9
Front Turn Signal
Light RH
W–B
A3

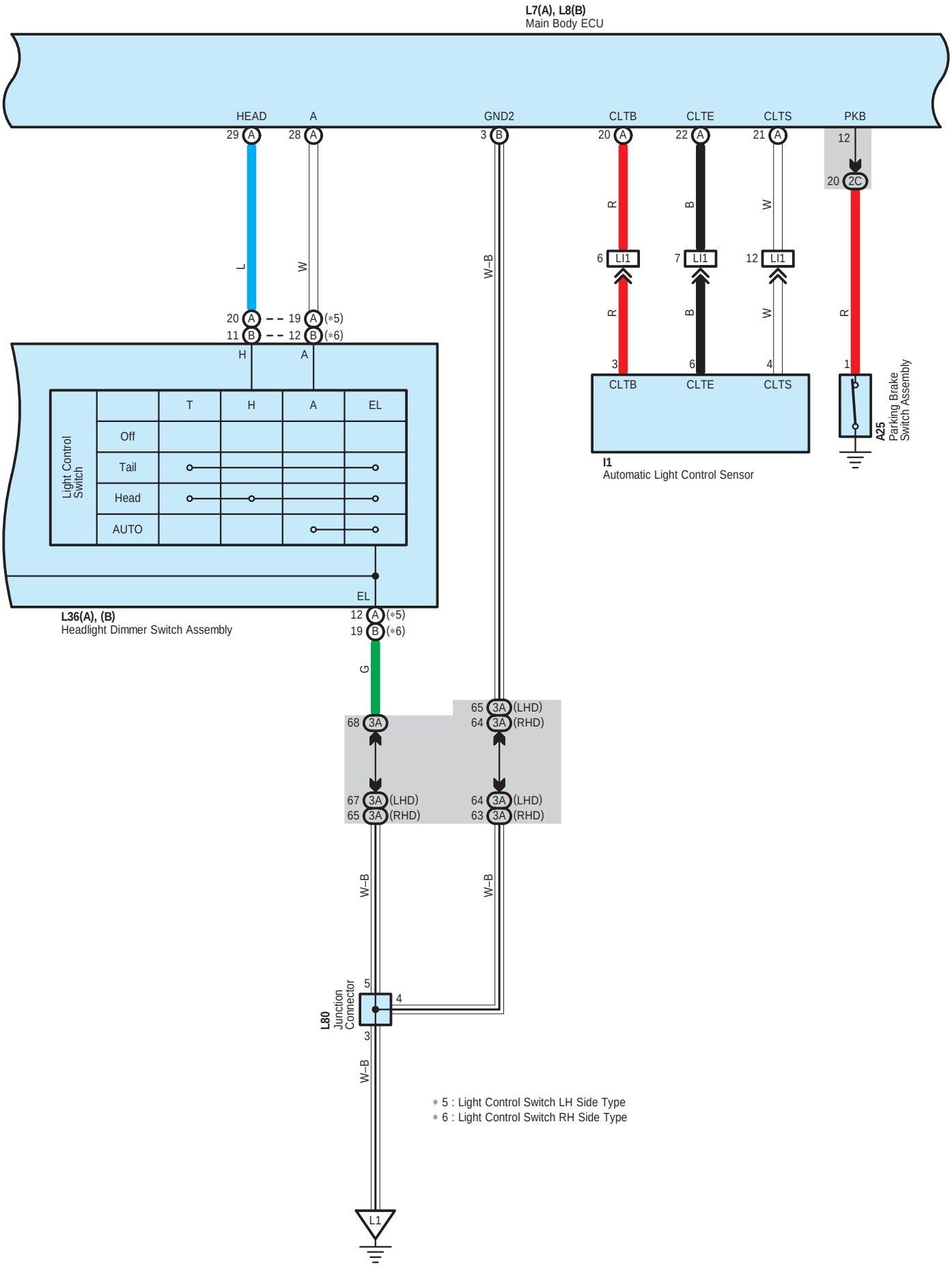
L7(A), L8(B)
Main Body ECU
HEAD
A
GND2
CLTB
CLTE
CLTS
PKB
29 A
28 A
3 B
20 A
22 A
21 A
12
20 2C
L
W
W–B
R
B
W
20 A – – 19 A (*5)
11 B – – 12 B (*6)
H
A
6 LI1
7 LI1
12 LI1
3
6
4
1
CLTB
CLTE
CLTS
I1
Automatic Light Control Sensor
A25
Parking Brake Switch Assembly
Light Control Switch
T
H
A
EL
Off
Tail
Head
AUTO
EL
L36(A), (B)
Headlight Dimmer Switch Assembly
12 A (*5)
19 B (*6)
G
68 3A
65 3A (LHD)
64 3A (RHD)
67 3A (LHD)
65 3A (RHD)
64 3A (LHD)
63 3A (RHD)
W–B
W–B
5
4
3
L80
Junction Connector
W–B
L1
* 5 : Light Control Switch LH Side Type
* 6 : Light Control Switch RH Side Type

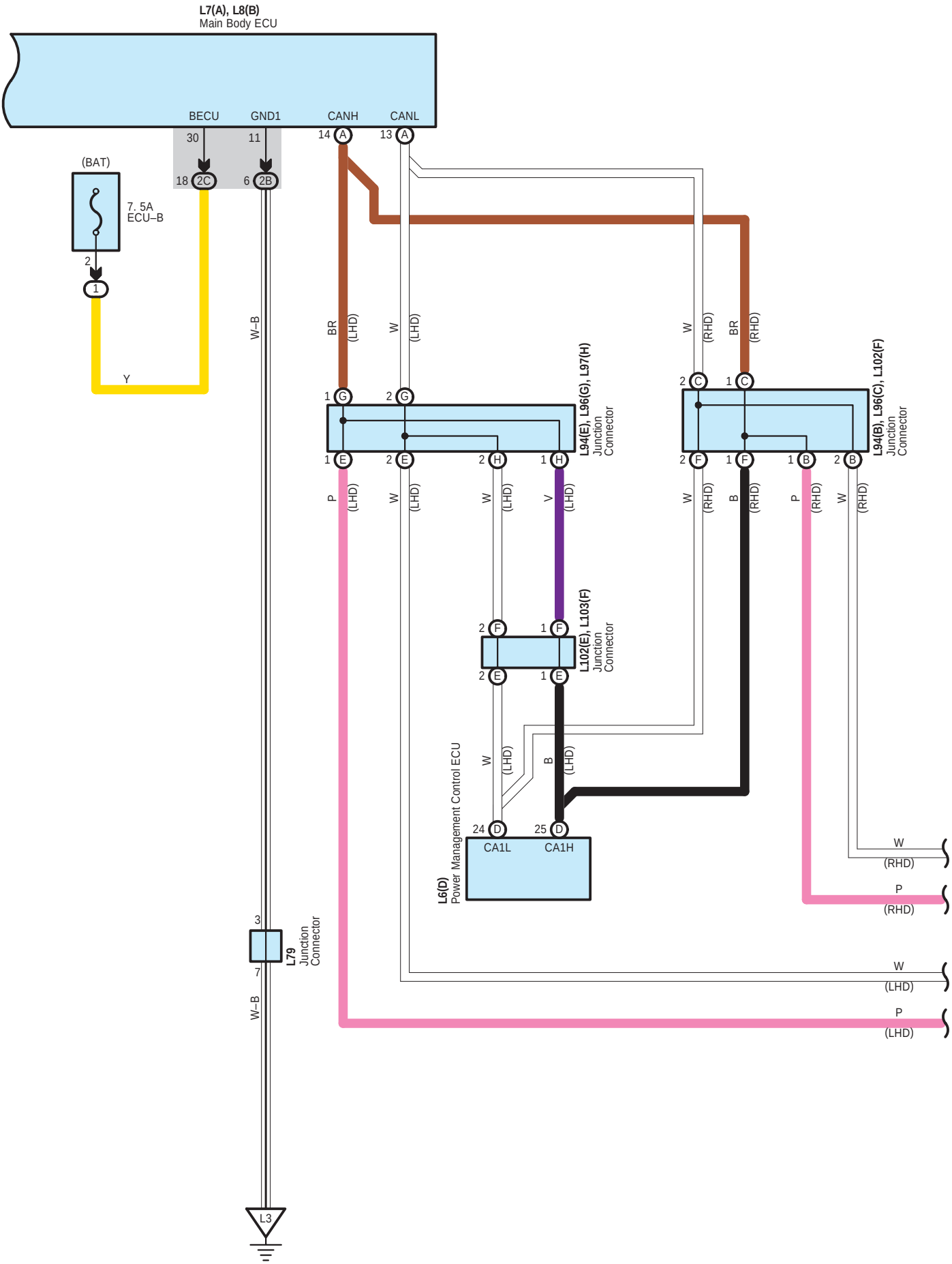
L7(A), L8(B)
Main Body ECU
BECU
GND1
CANH
CANL
30
11
14 A
13 A
18 2C
6 2B
(BAT)
7. 5A
ECU–B
2
1
Y
W–B
BR
(LHD)
W
(LHD)
W
(RHD)
BR
(RHD)
1 G
2 G
L94(E), L96(G), L97(H)
Junction
Connector
2 C
1 C
L94(B), L96(C), L102(F)
Junction
Connector
1 E
2 E
2 H
1 H
2 F
1 F
1 B
2 B
P
(LHD)
W
(LHD)
W
(LHD)
V
(LHD)
W
(RHD)
B
(RHD)
P
(RHD)
W
(RHD)
2 F
1 F
L102(E), L103(F)
Junction
Connector
2 E
1 E
W
(LHD)
B
(LHD)
24 D
25 D
CA1L
CA1H
L6(D)
Power Management Control ECU
W
(RHD)
P
(RHD)
3
7
L79
Junction
Connector
W
(LHD)
P
(LHD)
W–B
L3

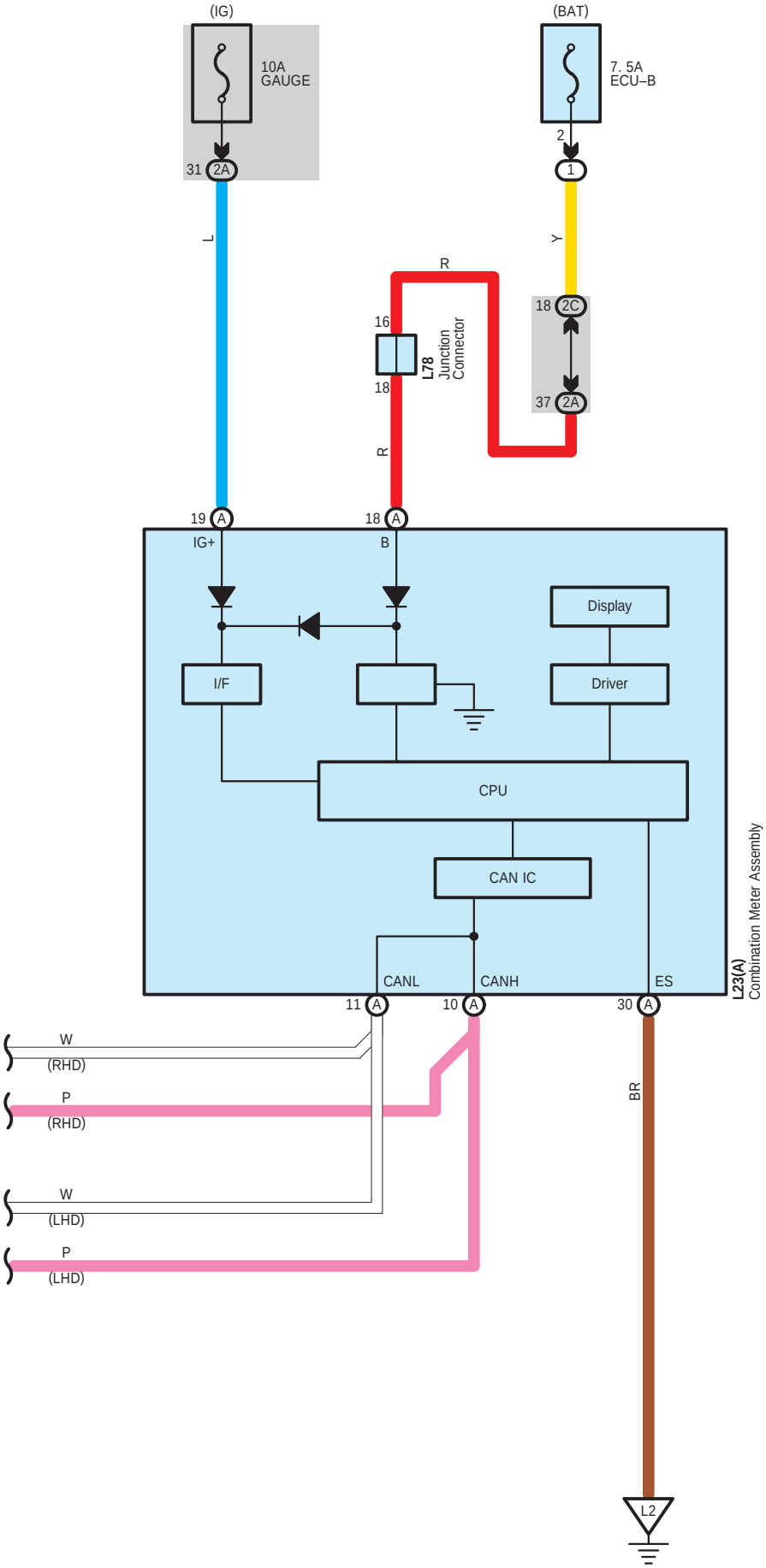
(IG)
10A
GAUGE
31 2A
L
(BAT)
7. 5A
ECU–B
2
1
Y
R
16
18
L78
Junction
Connector
18 2C
37 2A
R
19 A
IG+
18 A
B
Display
I/F
Driver
CPU
CAN IC
CANL
CANH
ES
11 A
10 A
30 A
L23(A)
Combination Meter Assembly
W
(RHD)
P
(RHD)
W
(LHD)
P
(LHD)
BR
L2

A 8
Black

(High LED Type)

A 9
Gray

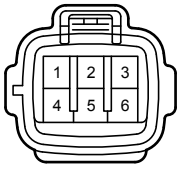

(Low and Clearance LED Type)

A 11
Black

(High Halogen Type)

A 12
Black

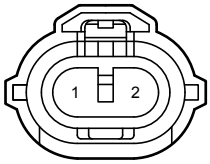

(Low Halogen Type)

A 25
White

A 38
Black

(High LED Type)

A 39
Gray

(Low and Clearance LED Type)

A 41
Black

(High Halogen Type)

A 42
Black

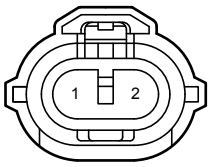

(Low Halogen Type)

C 8
Gray

C 9
Gray

I 1
Black

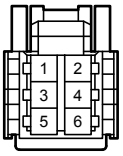

L 6
Gray

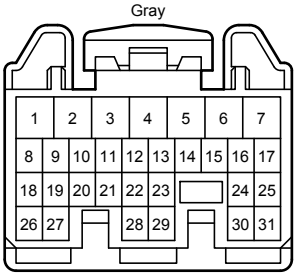

L 7
White

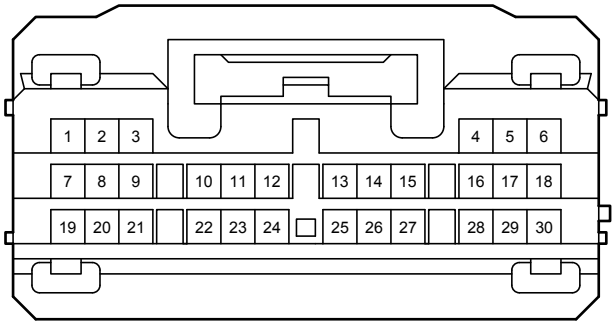

L 8
White

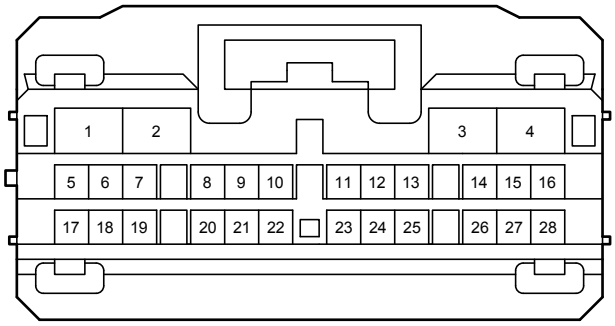

L 23
White

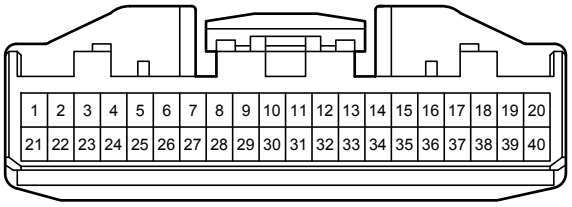

L 36
White

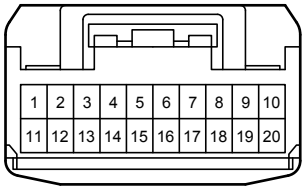

L 78
Gray

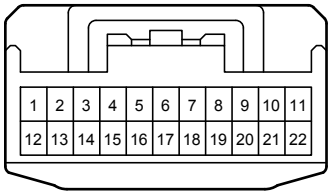

L 79
White

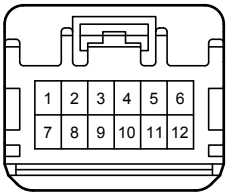

L 80
White

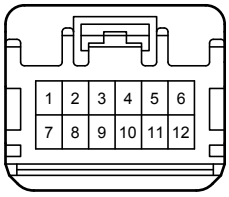

L 94
White

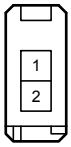

L 96
White

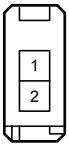

L 97
White

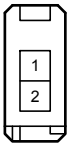

L102
White

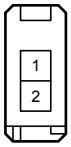

L103
White

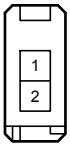

1G
White

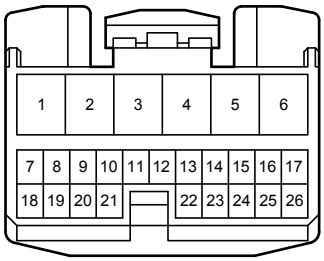

1H
White

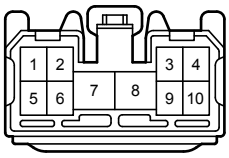

2A
White

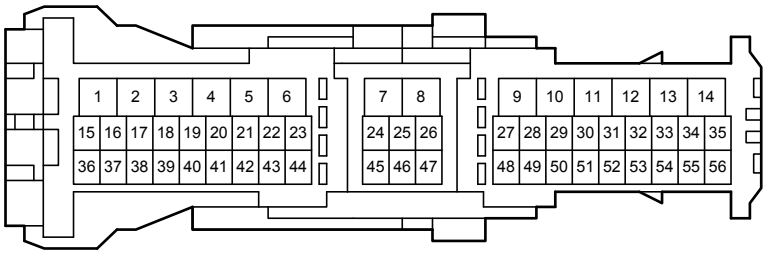

2B
White

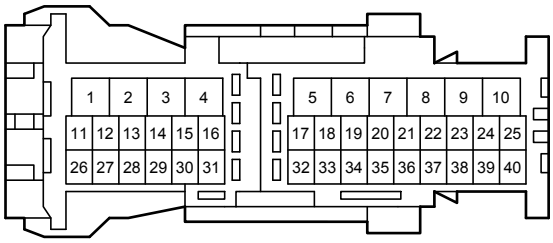

2C
White

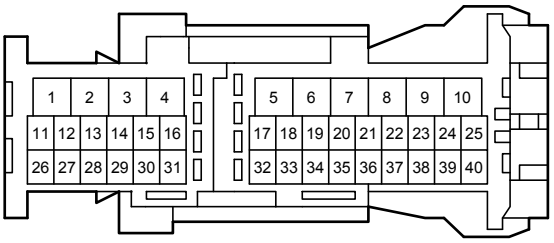

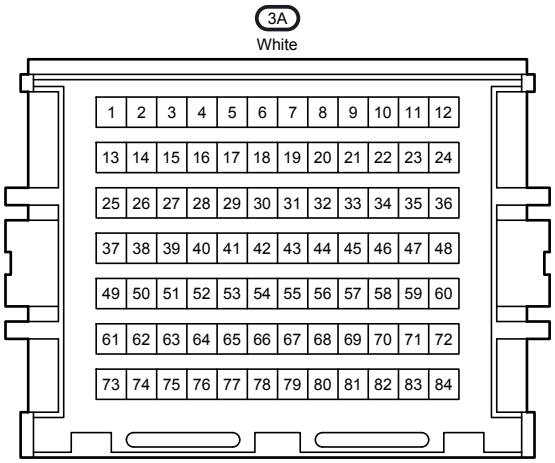
3A
White
1 2 3 4 5 6 7 8 9 10 11 12
13 14 15 16 17 18 19 20 21 22 23 24
25 26 27 28 29 30 31 32 33 34 35 36
37 38 39 40 41 42 43 44 45 46 47 48
49 50 51 52 53 54 55 56 57 58 59 60
61 62 63 64 65 66 67 68 69 70 71 72
73 74 75 76 77 78 79 80 81 82 83 84

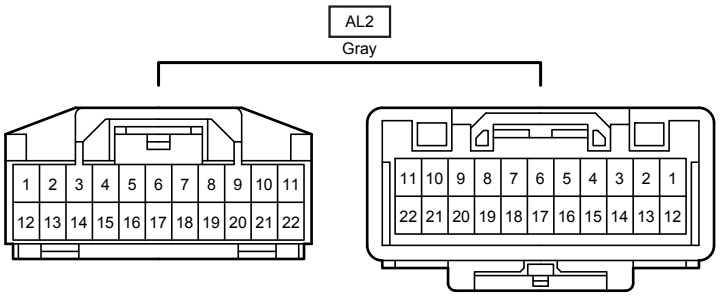
AL2
Gray
1 2 3 4 5 6 7 8 9 10 11
12 13 14 15 16 17 18 19 20 21 22
11 10 9 8 7 6 5 4 3 2 1
22 21 20 19 18 17 16 15 14 13 12

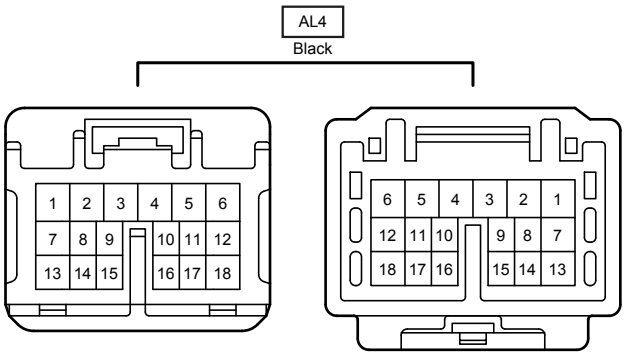
AL4
Black
1 2 3 4 5 6
7 8 9 10 11 12
13 14 15 16 17 18
6 5 4 3 2 1
12 11 10 9 8 7
18 17 16 15 14 13

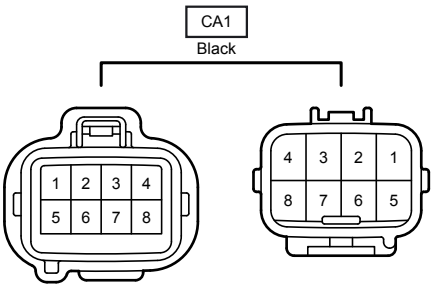
CA1
Black
1 2 3 4
5 6 7 8
4 3 2 1
8 7 6 5

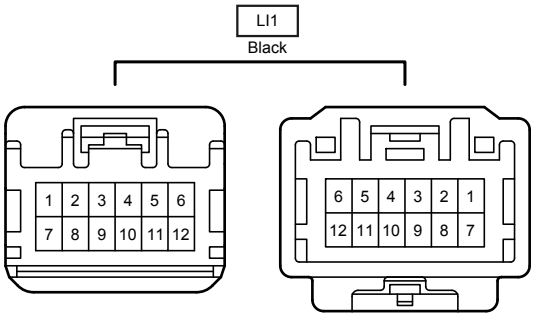
LI1
Black
1 2 3 4 5 6
7 8 9 10 11 12
6 5 4 3 2 1
12 11 10 9 8 7