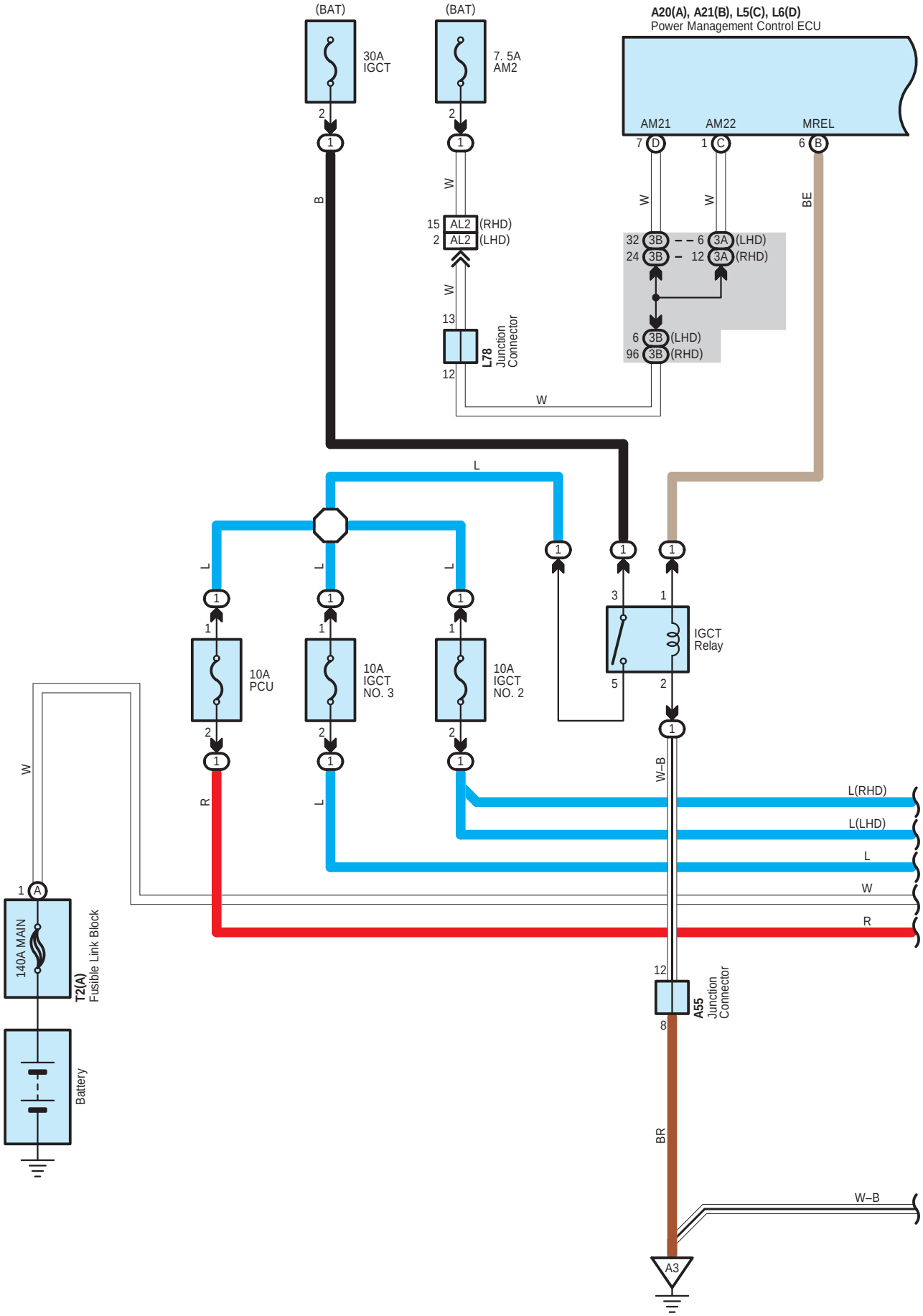
(BAT)
30A
IGCT
(BAT)
7. 5A
AM2
A20(A), A21(B), L5(C), L6(D)
Power Management Control ECU
AM21
AM22
MREL
AL2 (RHD)
AL2 (LHD)
L78
Junction
Connector
3B (LHD)
3A (LHD)
3B (RHD)
3A (RHD)
10A
PCU
10A
IGCT
NO. 3
10A
IGCT
NO. 2
IGCT
Relay
L(RHD)
L(LHD)
L
W
R
W–B
BR
BE
140A MAIN
T2(A)
Fusible Link Block
Battery
A55
Junction
Connector
A3

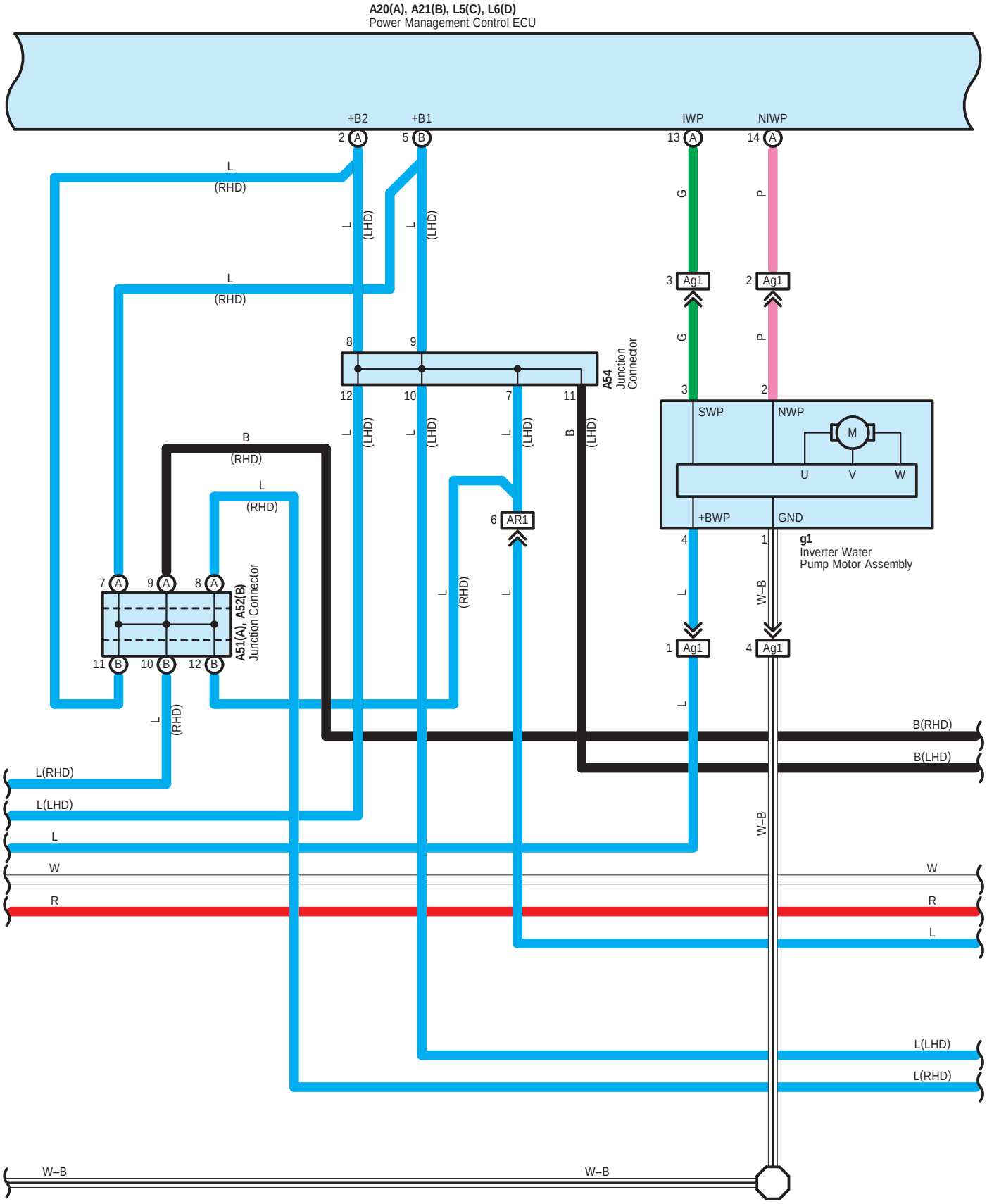
A20(A), A21(B), L5(C), L6(D)
Power Management Control ECU
+B2
+B1
IWP
NIWP
A54
Junction
Connector
SWP
NWP
M
U
V
W
+BWP
GND
g1
Inverter Water
Pump Motor Assembly
AR1
Ag1
A51(A), A52(B)
Junction Connector
L(RHD)
L(LHD)
B(RHD)
B(LHD)
W–B

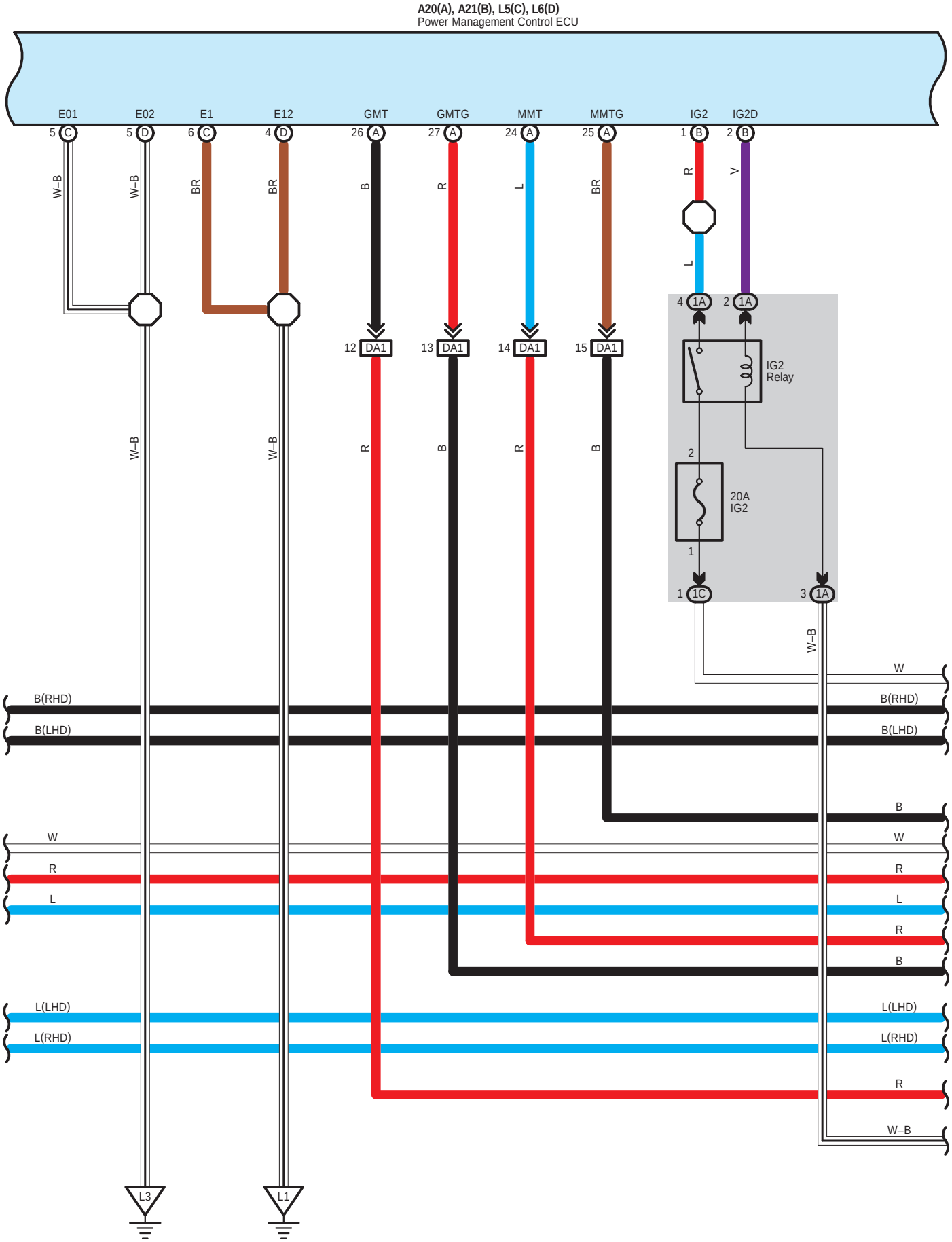
A20(A), A21(B), L5(C), L6(D)
Power Management Control ECU
E01
E02
E1
E12
GMT
GMTG
MMT
MMTG
IG2
IG2D
5 C
5 D
6 C
4 D
26 A
27 A
24 A
25 A
1 B
2 B
W–B
BR
B
R
L
V
4 1A
2 1A
12 DA1
13 DA1
14 DA1
15 DA1
IG2
Relay
2
20A
IG2
1
1 1C
3 1A
B(RHD)
B(LHD)
W
L(LHD)
L(RHD)
L3
L1

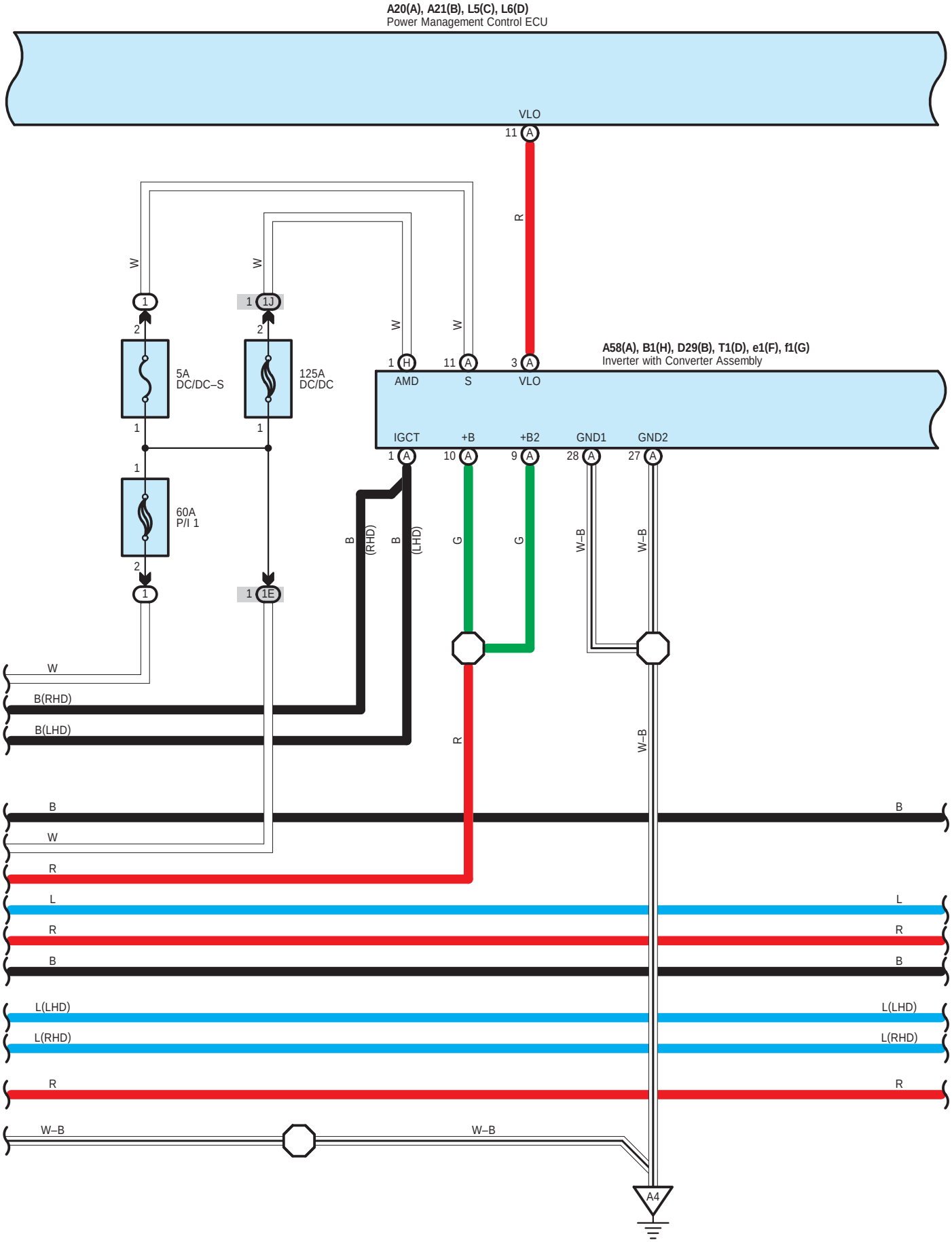
A20(A), A21(B), L5(C), L6(D)
Power Management Control ECU
VLO
11 A
R
W
W
1
1 1J
2
2
5A
DC/DC–S
125A
DC/DC
1
1
1
60A
P/I 1
2
1
1 1E
W
W
1 H
11 A
3 A
AMD
S
VLO
A58(A), B1(H), D29(B), T1(D), e1(F), f1(G)
Inverter with Converter Assembly
IGCT
+B
+B2
GND1
GND2
1 A
10 A
9 A
28 A
27 A
B
(RHD)
B
(LHD)
G
G
W–B
W–B
W
B(RHD)
B(LHD)
R
W–B
B
W
R
L
R
B
L(LHD)
L(RHD)
R
W–B
W–B
A4

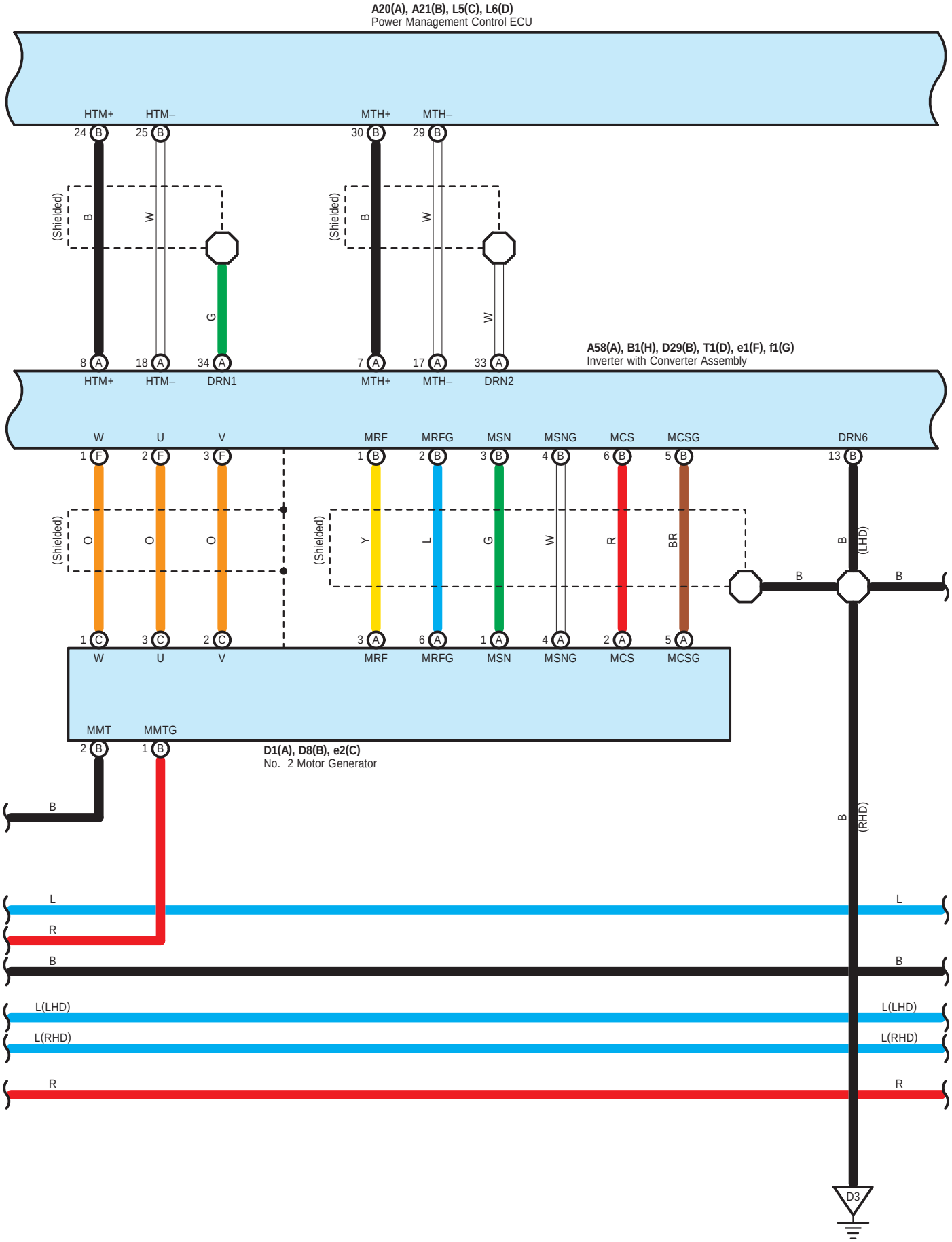
A20(A), A21(B), L5(C), L6(D)
Power Management Control ECU
HTM+
HTM–
MTH+
MTH–
24 B
25 B
30 B
29 B
(Shielded)
B
W
G
W
8 A
18 A
34 A
7 A
17 A
33 A
HTM+
HTM–
DRN1
MTH+
MTH–
DRN2
A58(A), B1(H), D29(B), T1(D), e1(F), f1(G)
Inverter with Converter Assembly
W
U
V
MRF
MRFG
MSN
MSNG
MCS
MCSG
DRN6
1 F
2 F
3 F
1 B
2 B
3 B
4 B
6 B
5 B
13 B
O
Y
L
R
BR
(LHD)
1 C
3 C
2 C
3 A
6 A
1 A
4 A
2 A
5 A
MMT
MMTG
2 B
1 B
D1(A), D8(B), e2(C)
No. 2 Motor Generator
(RHD)
L
R
L(LHD)
L(RHD)
D3

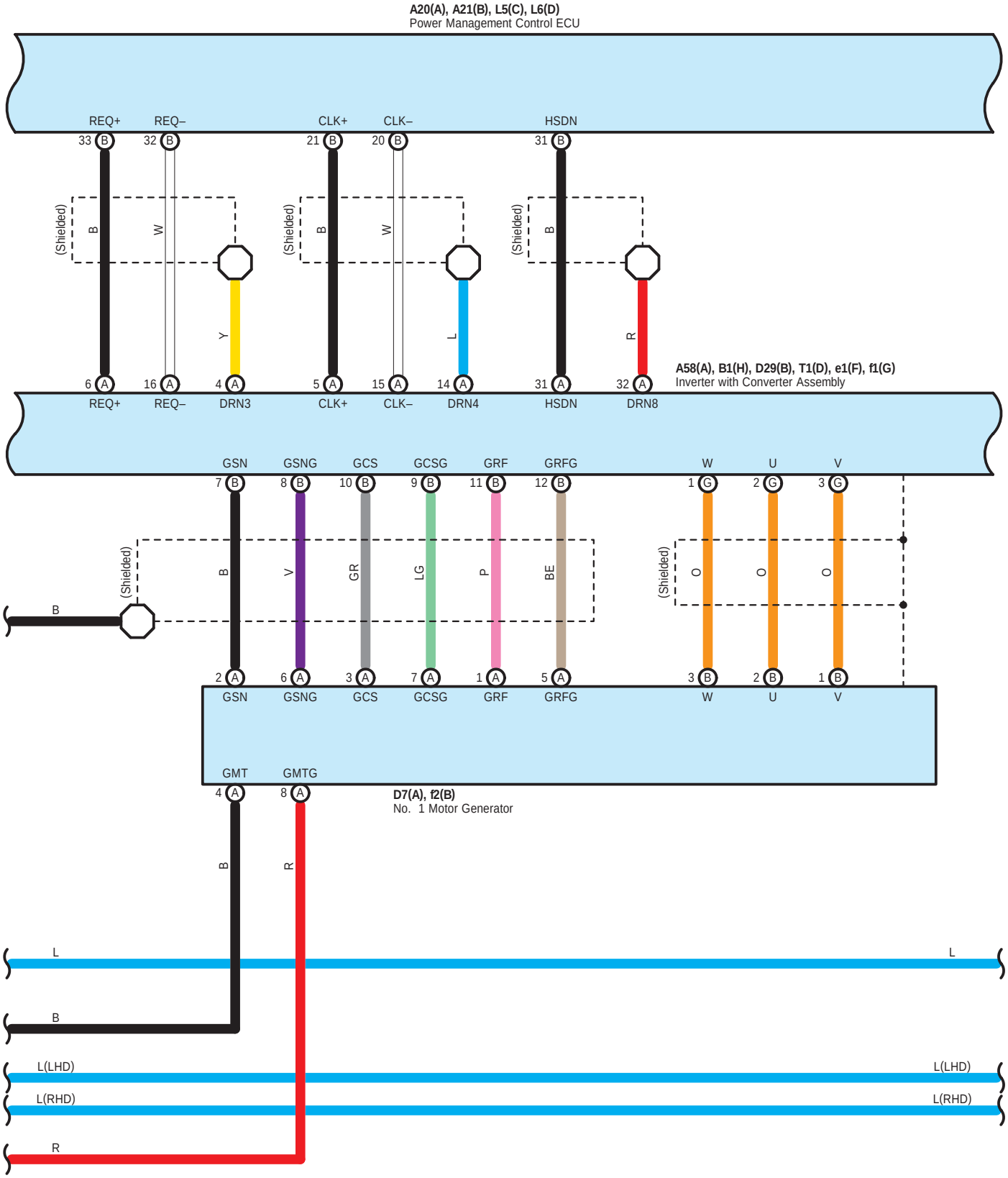
A20(A), A21(B), L5(C), L6(D)
Power Management Control ECU
REQ+
REQ–
CLK+
CLK–
HSDN
33 B
32 B
21 B
20 B
31 B
(Shielded)
B
W
Y
L
R
6 A
16 A
4 A
5 A
15 A
14 A
31 A
32 A
REQ+
REQ–
DRN3
CLK+
CLK–
DRN4
HSDN
DRN8
A58(A), B1(H), D29(B), T1(D), e1(F), f1(G)
Inverter with Converter Assembly
GSN
GSNG
GCS
GCSG
GRF
GRFG
W
U
V
7 B
8 B
10 B
9 B
11 B
12 B
1 G
2 G
3 G
V
GR
LG
P
BE
O
2 A
6 A
3 A
7 A
1 A
5 A
3 B
2 B
1 B
GMT
GMTG
4 A
8 A
D7(A), f2(B)
No. 1 Motor Generator
L
L(LHD)
L(RHD)
R

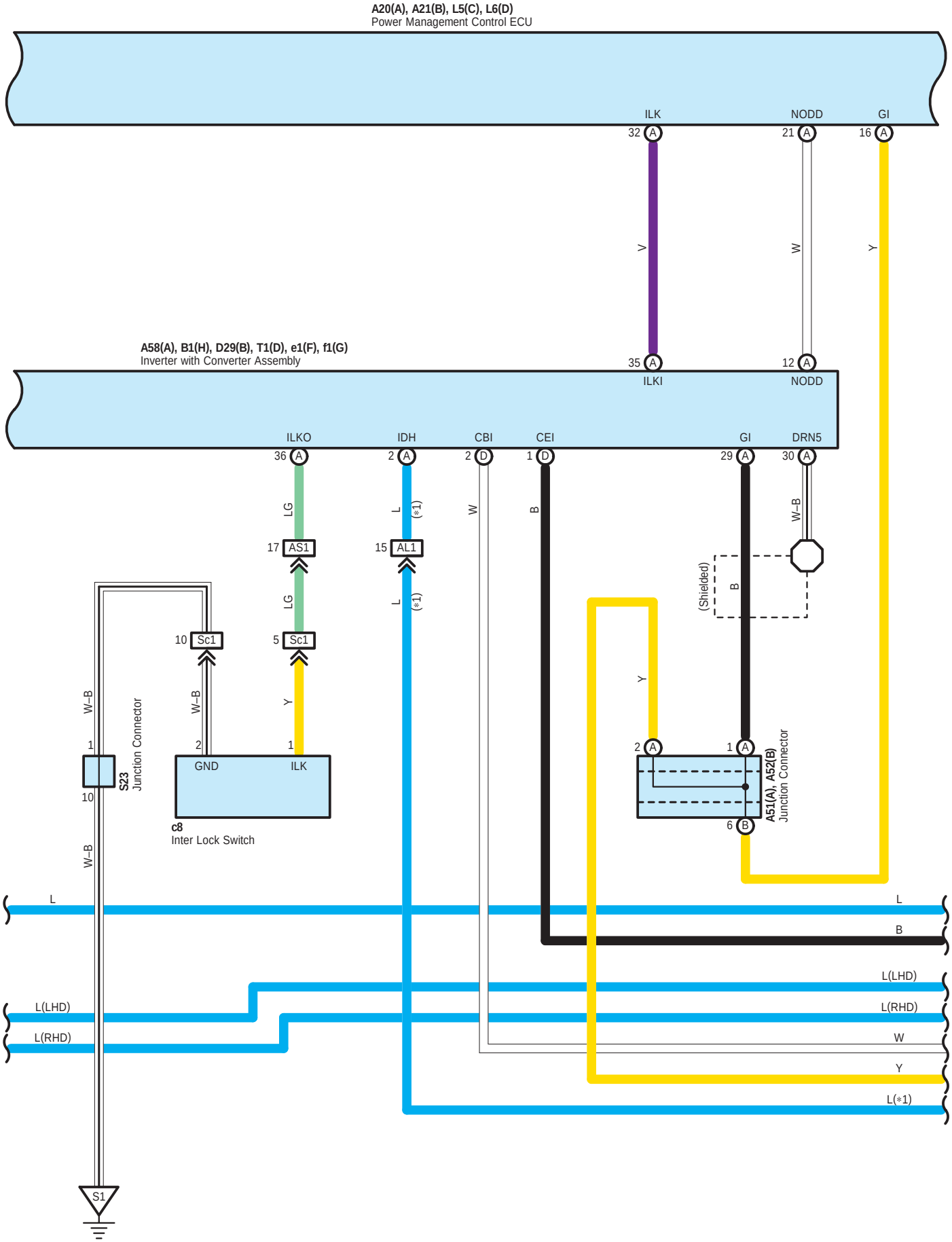
A20(A), A21(B), L5(C), L6(D)
Power Management Control ECU
ILK
NODD
GI
32 A
21 A
16 A
V
W
Y
A58(A), B1(H), D29(B), T1(D), e1(F), f1(G)
Inverter with Converter Assembly
35 A
12 A
ILKI
NODD
ILKO
IDH
CBI
CEI
GI
DRN5
36 A
2 A
2 D
1 D
29 A
30 A
LG
L
(*1)
W
B
W–B
17 AS1
15 AL1
(Shielded)
B
LG
L
(*1)
10 Sc1
5 Sc1
Y
W–B
W–B
Y
1
2
1
GND
ILK
S23
Junction Connector
10
c8
Inter Lock Switch
2 A
1 A
6 B
A51(A), A52(B)
Junction Connector
W–B
L
L
B
L(LHD)
L(RHD)
L(LHD)
L(RHD)
W
Y
L(*1)
S1

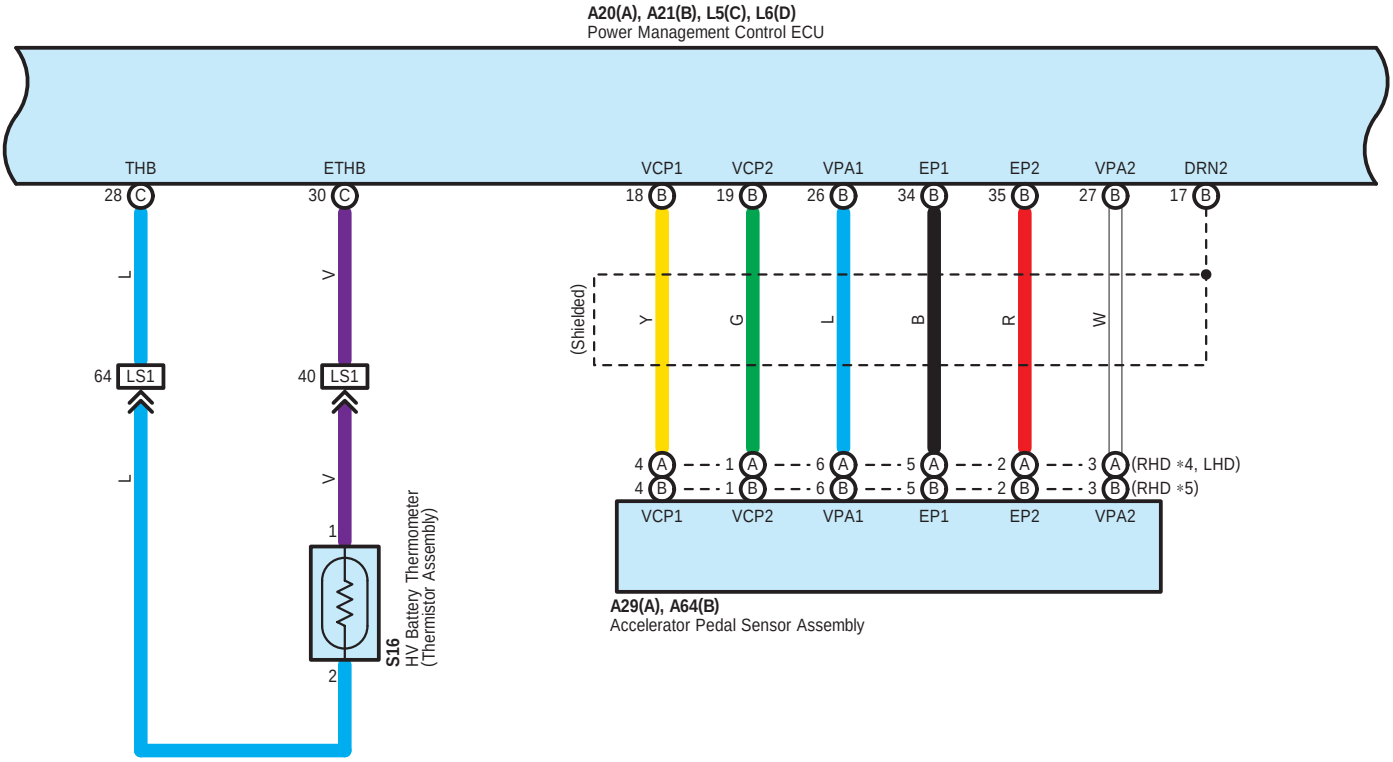

∗ 1 : w/ PTC Heater
∗ 4 : Before May 2014 Production
∗ 5 : From May 2014 Production

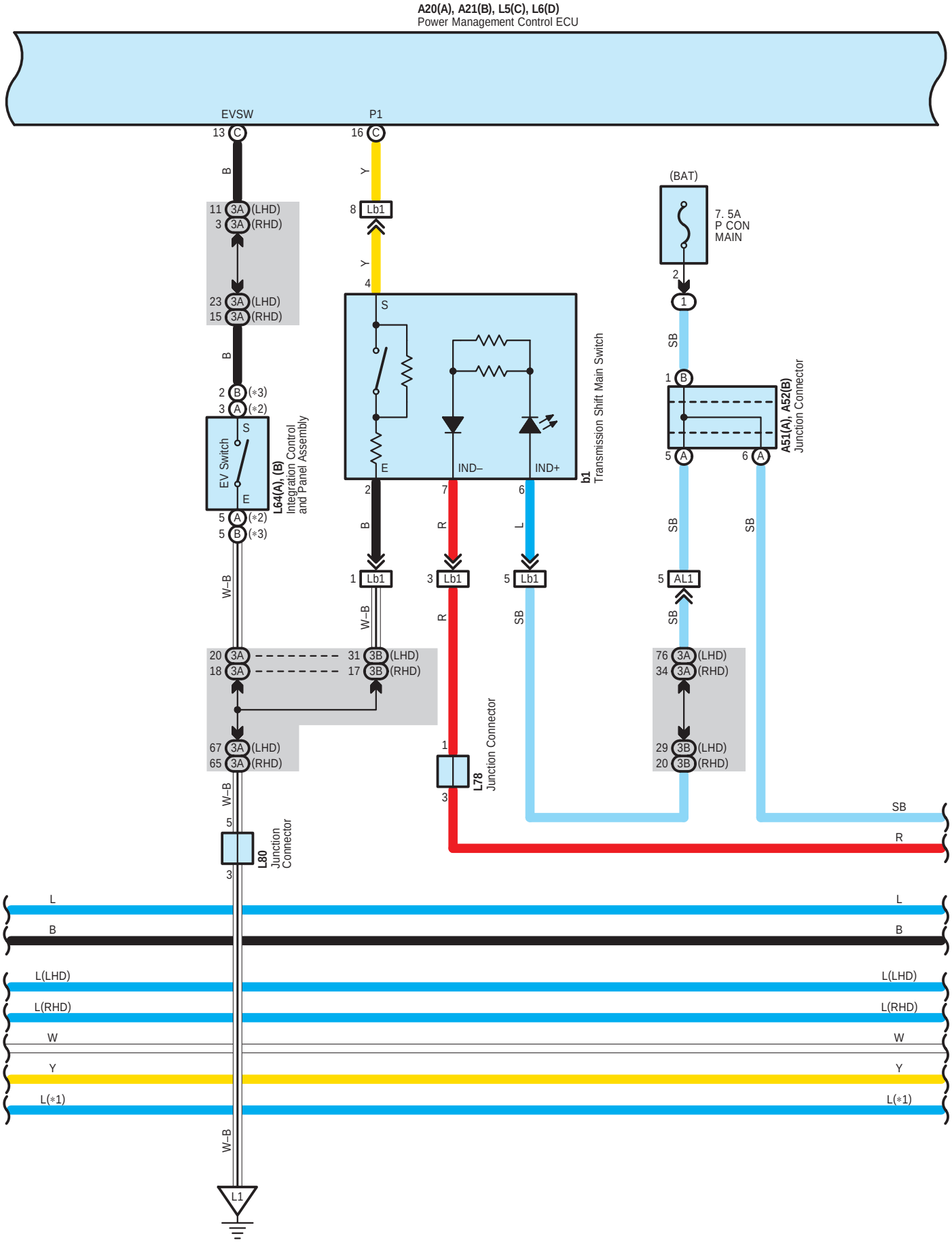
A20(A), A21(B), L5(C), L6(D)
Power Management Control ECU
EVSW
P1
13 C
16 C
B
Y
11 3A (LHD)
3 3A (RHD)
8 Lb1
Y
4
23 3A (LHD)
15 3A (RHD)
S
B
2 B (*3)
3 A (*2)
S
EV Switch
E
L64(A), (B)
Integration Control and Panel Assembly
5 A (*2)
5 B (*3)
E
IND–
IND+
b1
Transmission Shift Main Switch
2
7
6
B
R
L
W–B
1 Lb1
3 Lb1
5 Lb1
W–B
R
SB
20 3A
18 3A
31 3B (LHD)
17 3B (RHD)
67 3A (LHD)
65 3A (RHD)
1
L78
Junction Connector
3
W–B
5
L80
Junction Connector
3
(BAT)
7. 5A
P CON
MAIN
2
1
SB
1 B
A51(A), A52(B)
Junction Connector
5 A
6 A
SB
SB
5 AL1
SB
76 3A (LHD)
34 3A (RHD)
29 3B (LHD)
20 3B (RHD)
SB
R
L
B
L(LHD)
L(RHD)
W
Y
L(*1)
W–B
L1

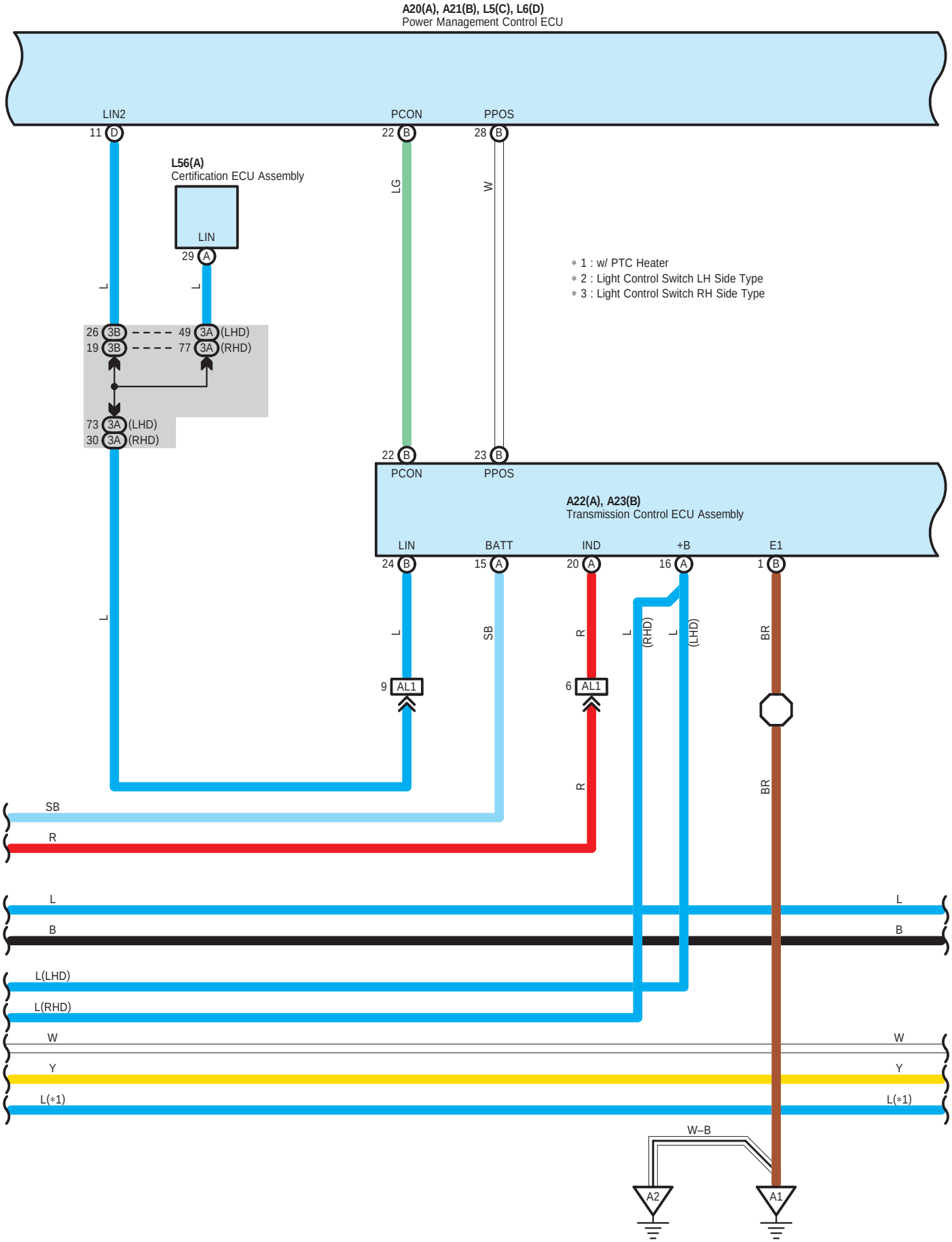
A20(A), A21(B), L5(C), L6(D)
Power Management Control ECU
LIN2
PCON
PPOS
11 D
22 B
28 B
L56(A)
Certification ECU Assembly
LIN
29 A
LG
W
L
L
26 3B
19 3B
49 3A (LHD)
77 3A (RHD)
73 3A (LHD)
30 3A (RHD)
∗ 1 : w/ PTC Heater
∗ 2 : Light Control Switch LH Side Type
∗ 3 : Light Control Switch RH Side Type
22 B
23 B
PCON
PPOS
A22(A), A23(B)
Transmission Control ECU Assembly
LIN
BATT
IND
+B
E1
24 B
15 A
20 A
16 A
1 B
L
SB
R
L (RHD)
L (LHD)
BR
9 AL1
6 AL1
R
BR
SB
R
L
L
B
B
L(LHD)
L(RHD)
W
W
Y
Y
L(∗1)
L(∗1)
W–B
A2
A1

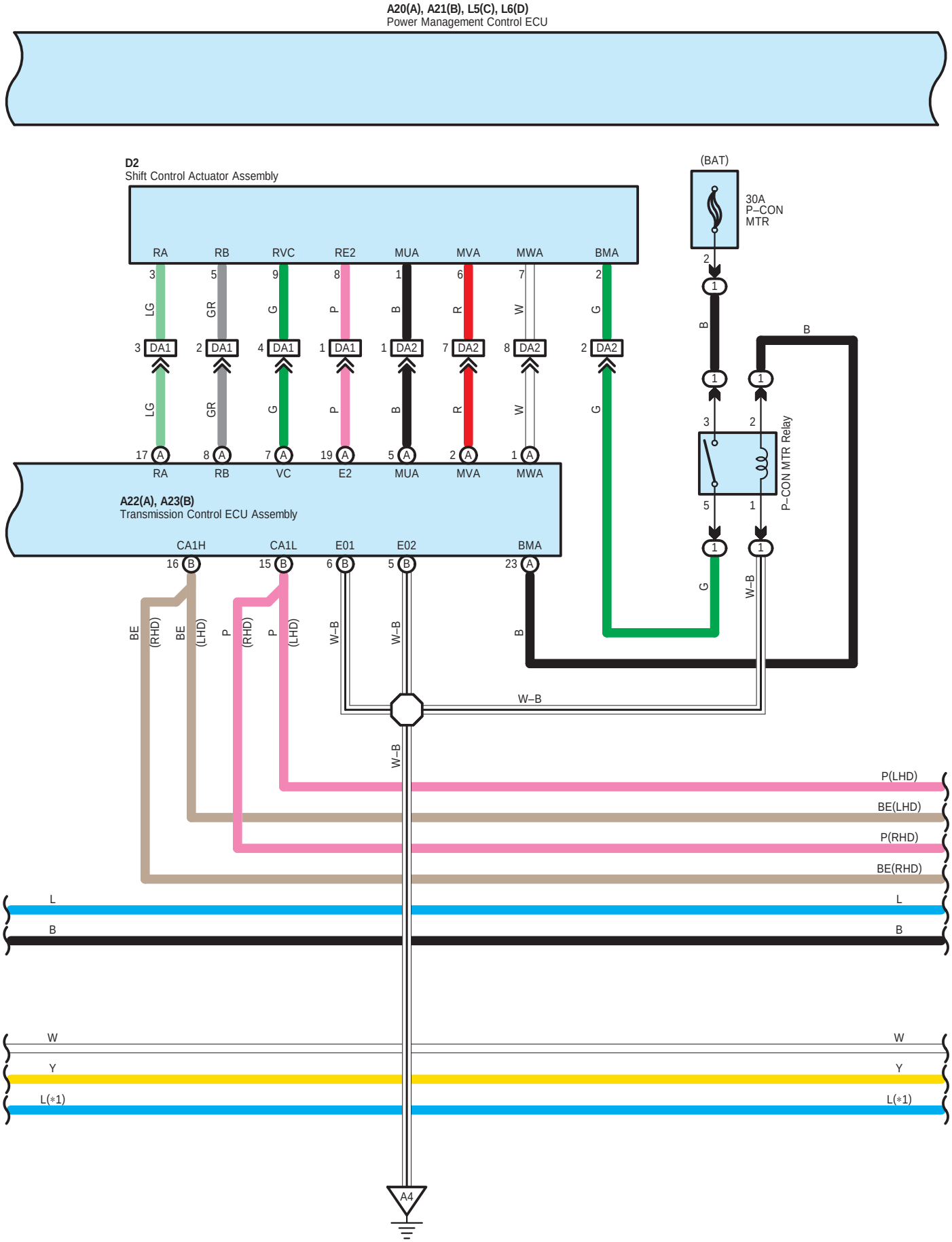
A20(A), A21(B), L5(C), L6(D)
Power Management Control ECU
D2
Shift Control Actuator Assembly
RA
RB
RVC
RE2
MUA
MVA
MWA
BMA
DA1
DA2
(BAT)
30A
P–CON
MTR
P–CON MTR Relay
A22(A), A23(B)
Transmission Control ECU Assembly
CA1H
CA1L
E01
E02
VC
E2
BE (RHD)
BE (LHD)
P (RHD)
P (LHD)
W–B
P(LHD)
BE(LHD)
P(RHD)
BE(RHD)
L
B
W
Y
L(*1)
A4

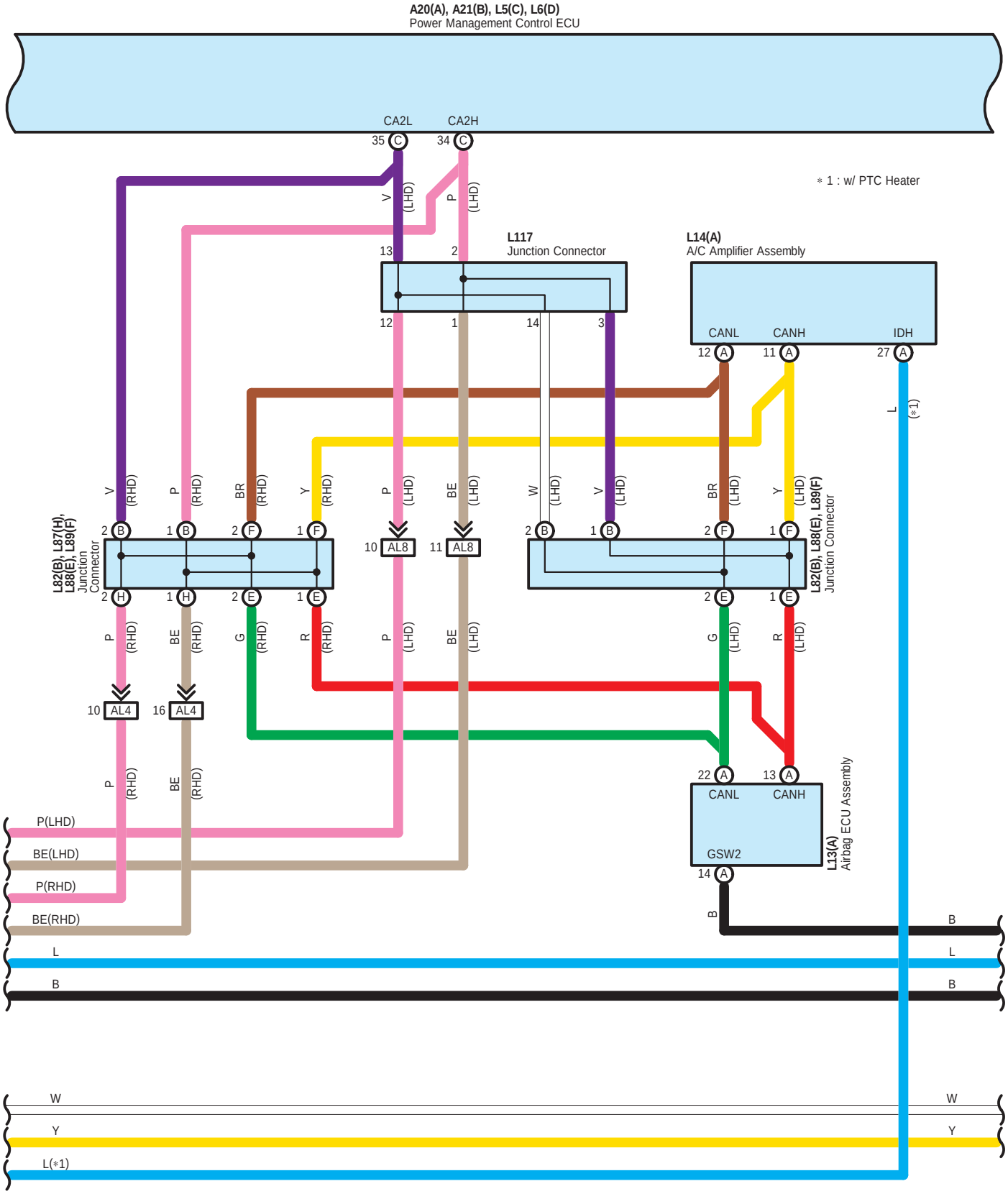
A20(A), A21(B), L5(C), L6(D)
Power Management Control ECU
CA2L
CA2H
35 C
34 C
∗ 1 : w/ PTC Heater
V (LHD)
P (LHD)
L117
Junction Connector
13
2
12
1
14
3
L14(A)
A/C Amplifier Assembly
CANL
CANH
IDH
12 A
11 A
27 A
L (∗1)
V (RHD)
P (RHD)
BR (RHD)
Y (RHD)
P (LHD)
BE (LHD)
W (LHD)
V (LHD)
BR (LHD)
Y (LHD)
L82(B), L87(H), L88(E), L89(F)
Junction Connector
L82(B), L88(E), L89(F)
Junction Connector
10 AL8
11 AL8
P (RHD)
BE (RHD)
G (RHD)
R (RHD)
P (LHD)
BE (LHD)
G (LHD)
R (LHD)
10 AL4
16 AL4
22 A
13 A
CANL
CANH
GSW2
14 A
L13(A)
Airbag ECU Assembly
P(LHD)
BE(LHD)
P(RHD)
BE(RHD)
L
B
W
Y
L(∗1)

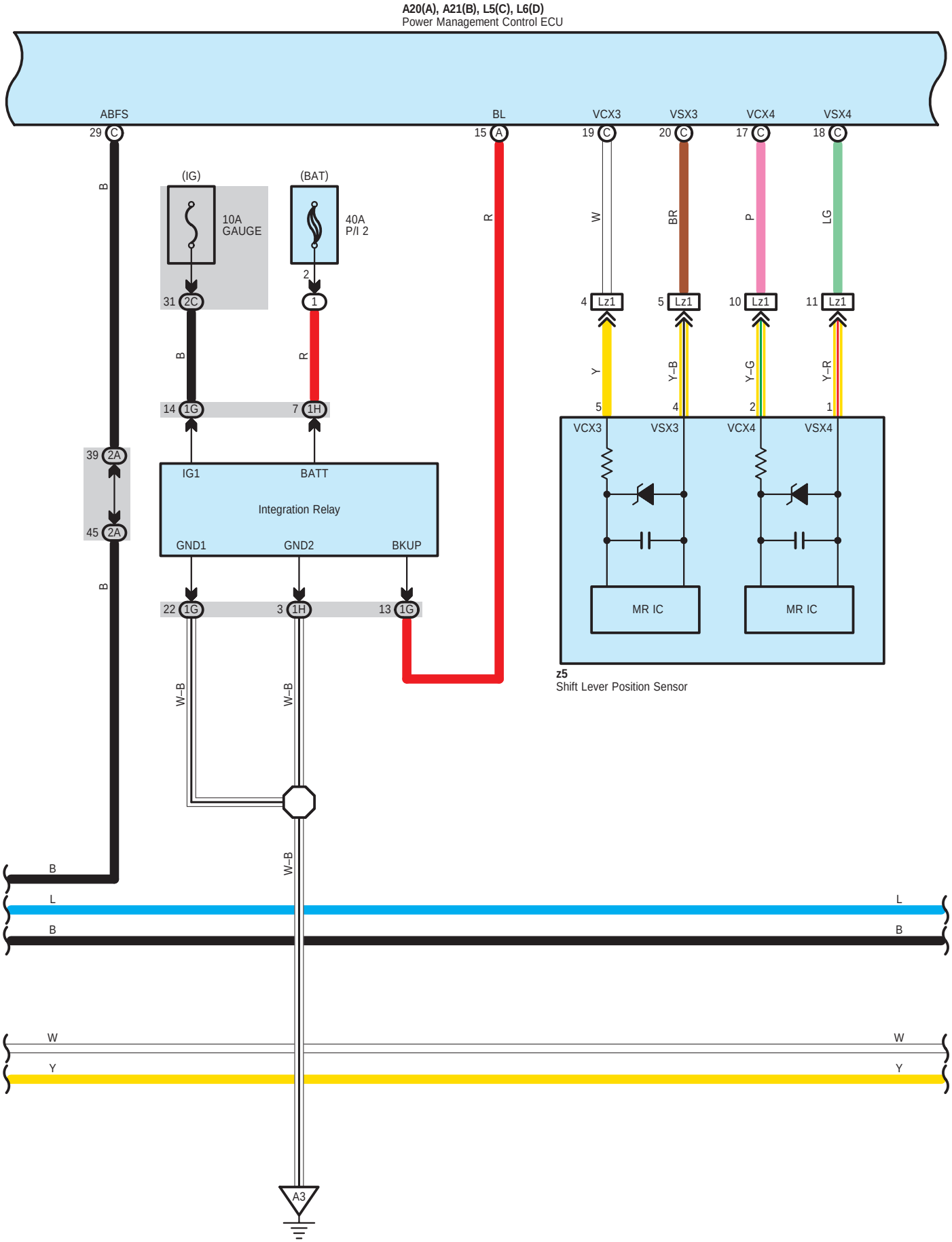
A20(A), A21(B), L5(C), L6(D)
Power Management Control ECU
ABFS
BL
VCX3
VSX3
VCX4
VSX4
29 C
15 A
19 C
20 C
17 C
18 C
(IG)
(BAT)
10A
GAUGE
40A
P/I 2
31 2C
2
1
4 Lz1
5 Lz1
10 Lz1
11 Lz1
14 1G
7 1H
5
4
2
1
39 2A
45 2A
IG1
BATT
Integration Relay
GND1
GND2
BKUP
22 1G
3 1H
13 1G
MR IC
MR IC
z5
Shift Lever Position Sensor
A3

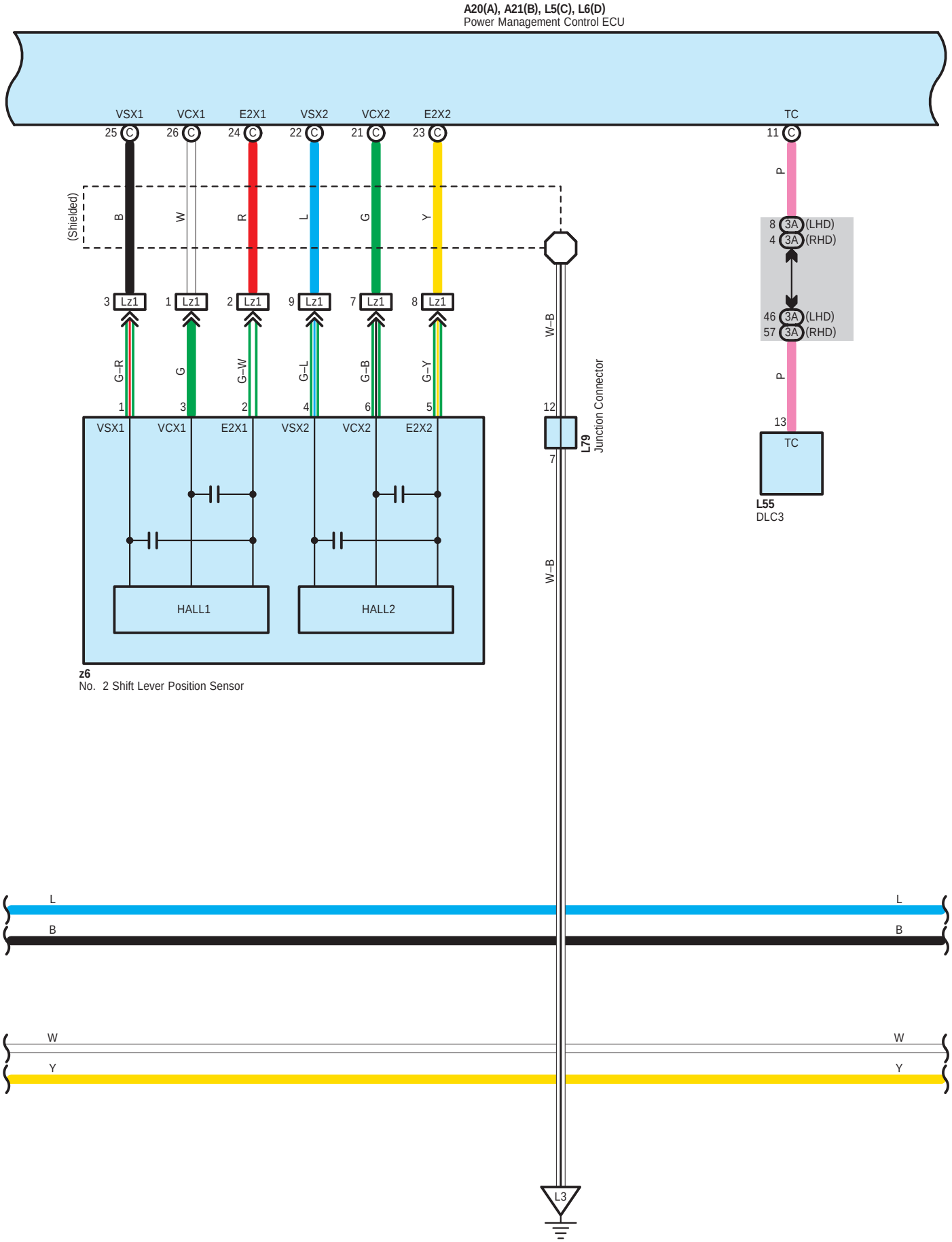
A20(A), A21(B), L5(C), L6(D)
Power Management Control ECU
VSX1
VCX1
E2X1
VSX2
VCX2
E2X2
TC
25
26
24
22
21
23
11
(Shielded)
B
W
R
L
G
Y
P
8 3A (LHD)
4 3A (RHD)
46 3A (LHD)
57 3A (RHD)
3 Lz1
1 Lz1
2 Lz1
9 Lz1
7 Lz1
8 Lz1
G–R
G
G–W
G–L
G–B
G–Y
W–B
1
3
2
4
6
5
12
7
13
L79
Junction Connector
L55
DLC3
HALL1
HALL2
z6
No. 2 Shift Lever Position Sensor
L3

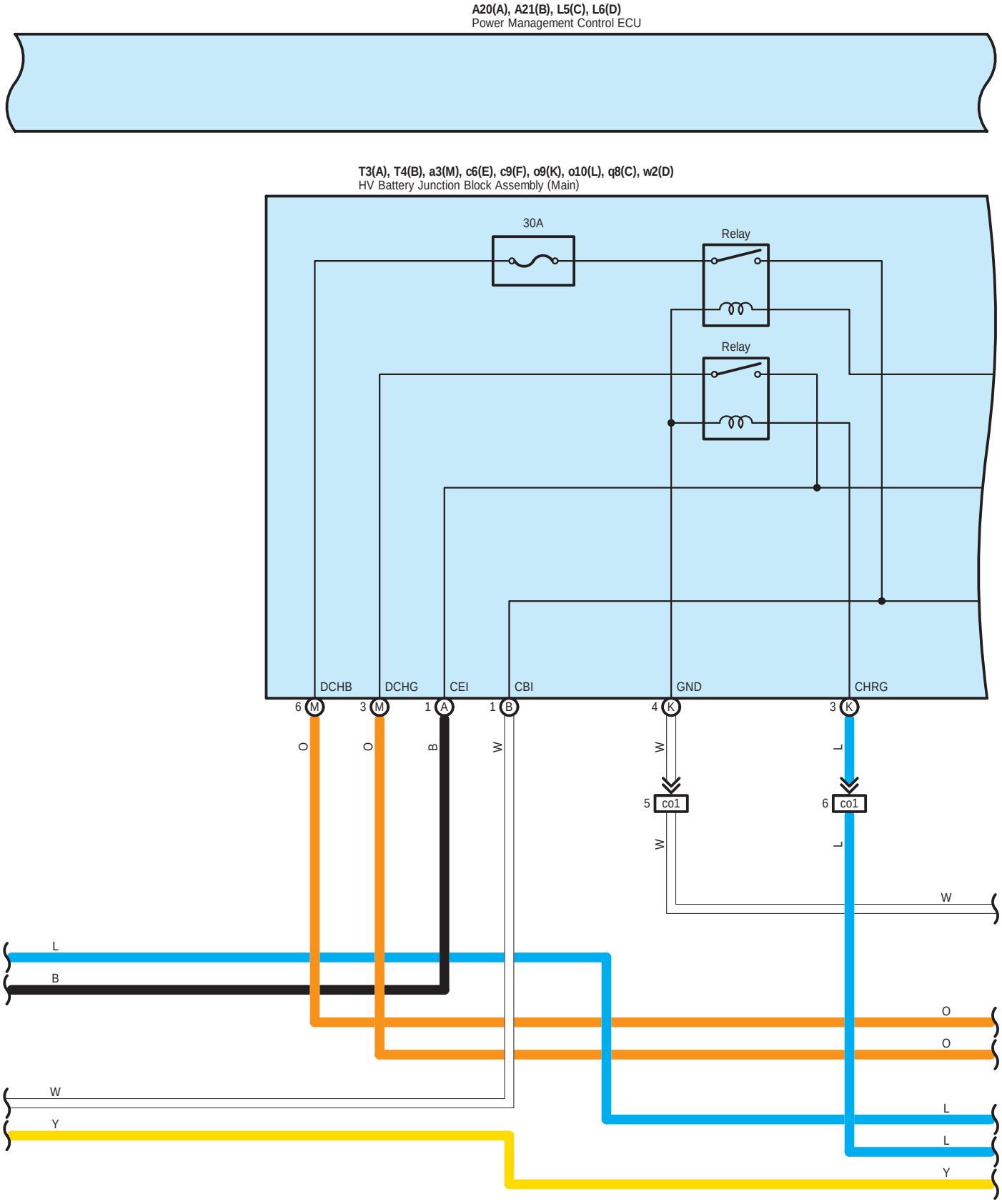
A20(A), A21(B), L5(C), L6(D)
Power Management Control ECU
T3(A), T4(B), a3(M), c6(E), c9(F), o9(K), o10(L), q8(C), w2(D)
HV Battery Junction Block Assembly (Main)
30A
Relay
Relay
DCHB
DCHG
CEI
CBI
GND
CHRG
6 M
3 M
1 A
1 B
4 K
3 K
O
O
B
W
W
L
5 co1
6 co1
W
L
W
L
B
O
O
W
Y
L
L
Y

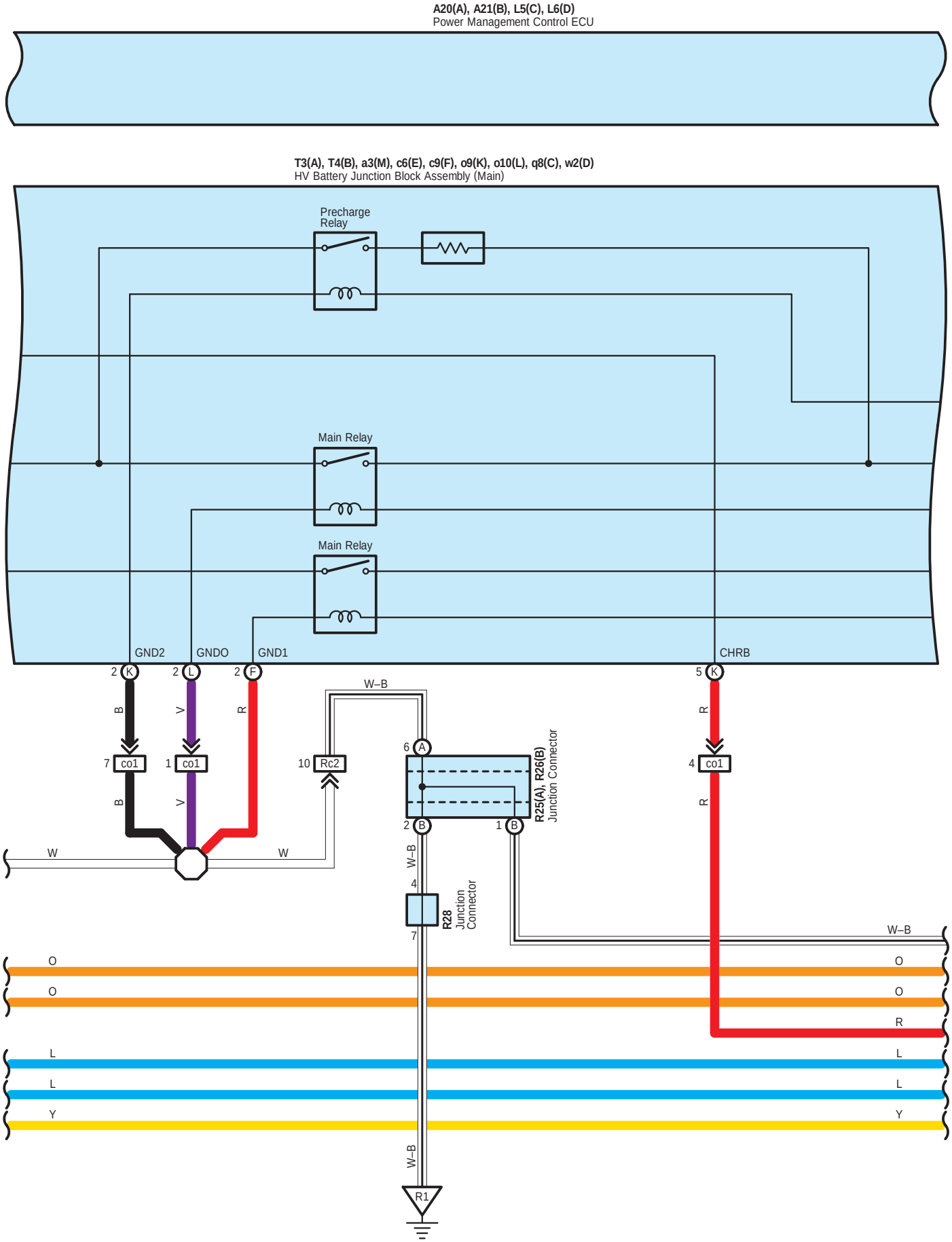
A20(A), A21(B), L5(C), L6(D)
Power Management Control ECU
T3(A), T4(B), a3(M), c6(E), c9(F), o9(K), o10(L), q8(C), w2(D)
HV Battery Junction Block Assembly (Main)
Precharge Relay
Main Relay
Main Relay
GND2
GNDO
GND1
CHRB
2 K
2 L
2 F
5 K
B
V
R
R
7 co1
1 co1
10 Rc2
4 co1
B
V
R
W–B
6 A
2 B
1 B
R25(A), R26(B) Junction Connector
W
W
W–B
4
7
R28 Junction Connector
W–B
O
O
O
O
R
L
L
L
L
Y
Y
W–B
R1

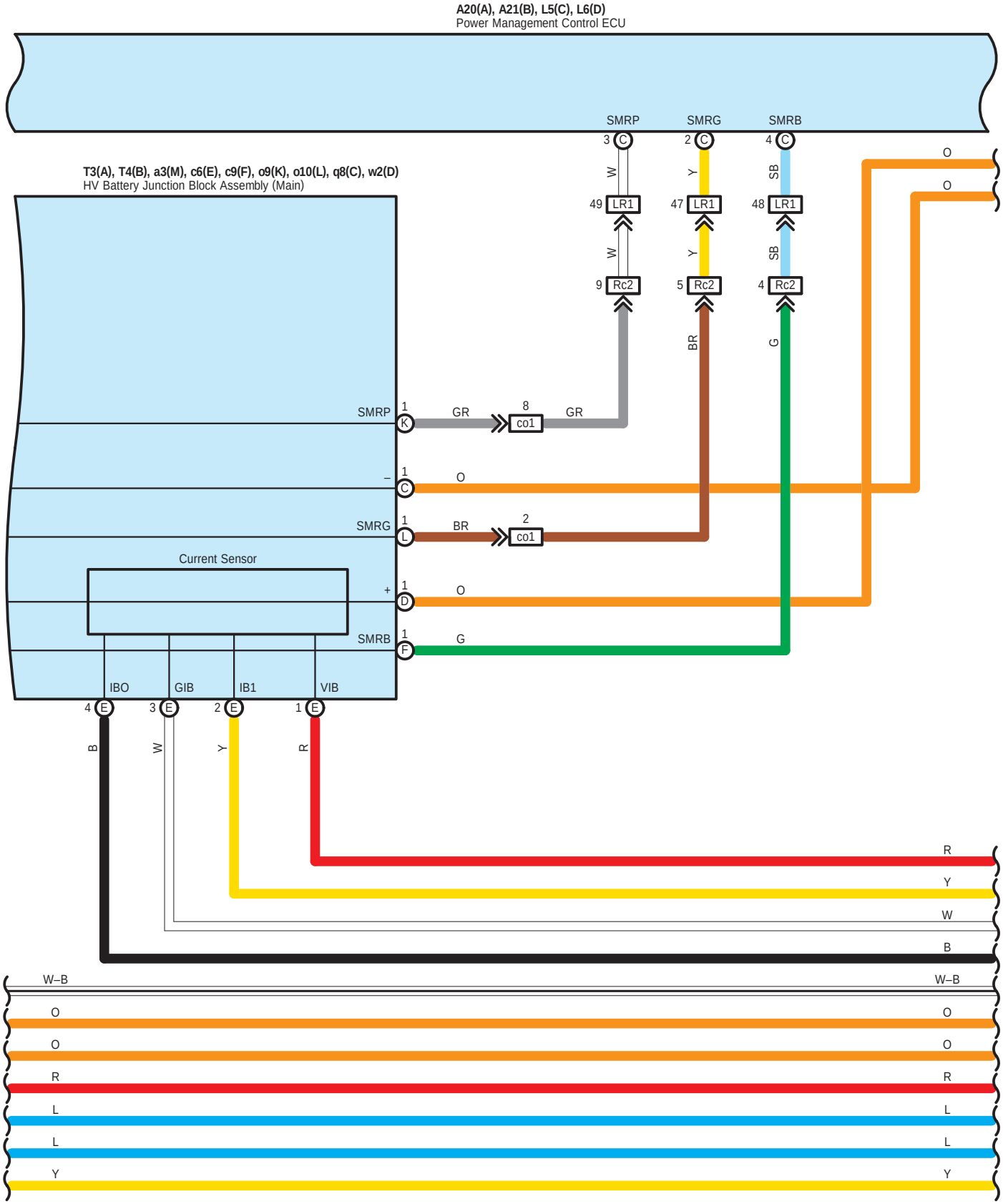
A20(A), A21(B), L5(C), L6(D)
Power Management Control ECU
SMRP
SMRG
SMRB
T3(A), T4(B), a3(M), c6(E), c9(F), o9(K), o10(L), q8(C), w2(D)
HV Battery Junction Block Assembly (Main)
LR1
Rc2
co1
Current Sensor
IBO
GIB
IB1
VIB
GR
BR
O
G
W
Y
SB
B
R
W–B
L

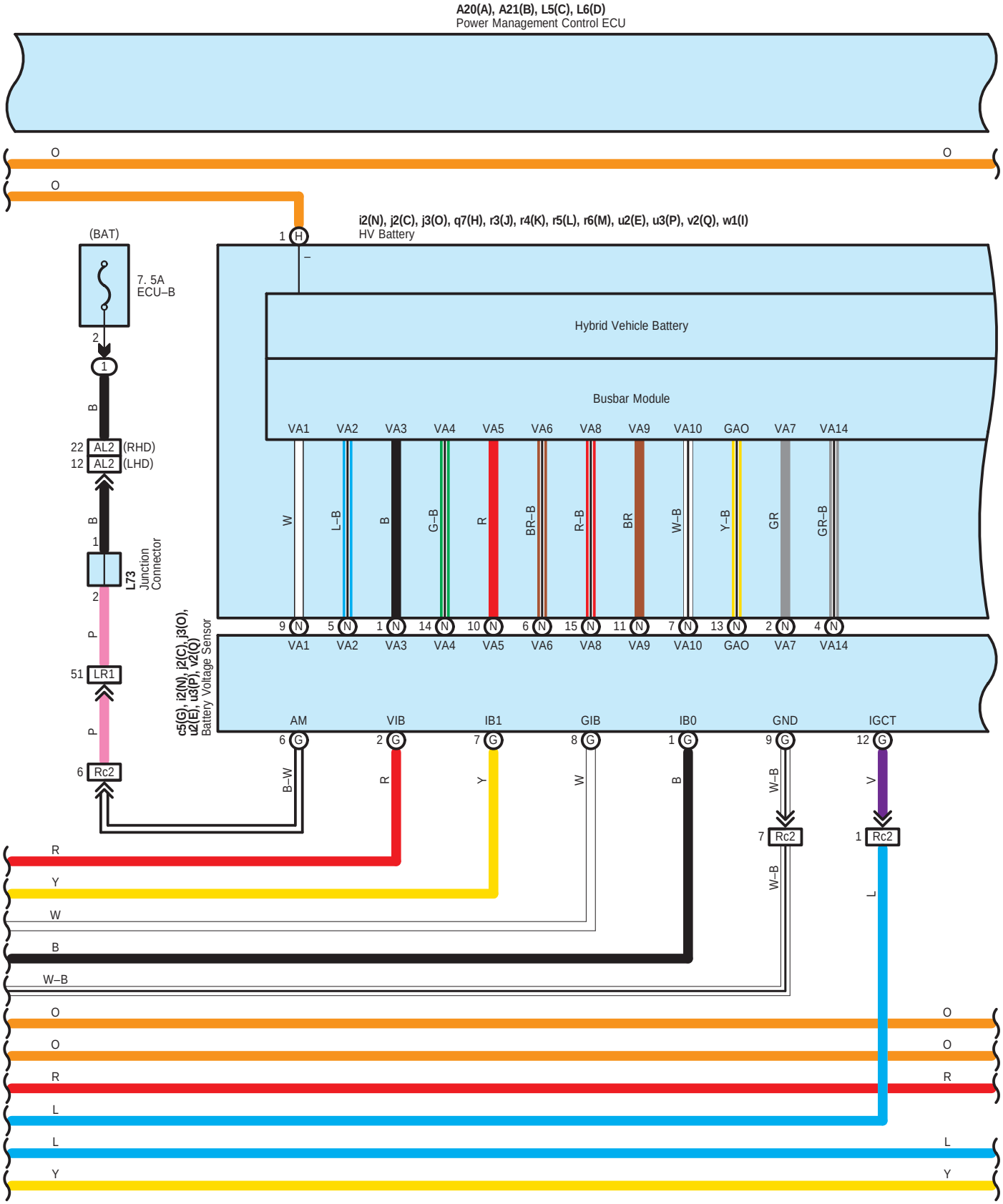
A20(A), A21(B), L5(C), L6(D)
Power Management Control ECU
i2(N), j2(C), j3(O), q7(H), r3(J), r4(K), r5(L), r6(M), u2(E), u3(P), v2(Q), w1(I)
HV Battery
(BAT)
7. 5A
ECU–B
Hybrid Vehicle Battery
Busbar Module
VA1 VA2 VA3 VA4 VA5 VA6 VA8 VA9 VA10 GAO VA7 VA14
22 AL2 (RHD)
12 AL2 (LHD)
L73
Junction
Connector
51 LR1
6 Rc2
c5(G), i2(N), j2(C), j3(O), u2(E), u3(P), v2(Q)
Battery Voltage Sensor
AM VIB IB1 GIB IB0 GND IGCT
7 Rc2
1 Rc2

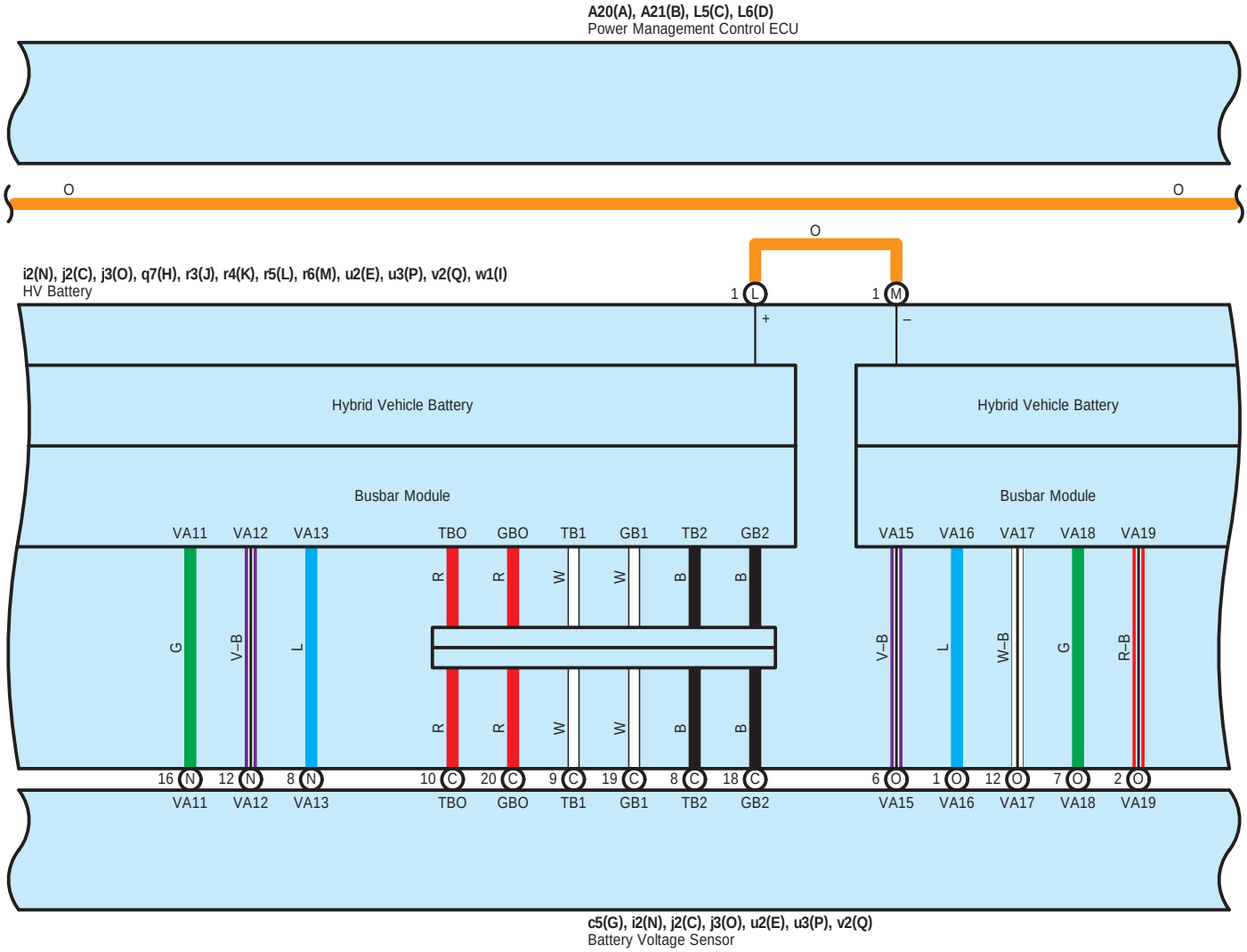
A20(A), A21(B), L5(C), L6(D)
Power Management Control ECU
O
O
O
i2(N), j2(C), j3(O), q7(H), r3(J), r4(K), r5(L), r6(M), u2(E), u3(P), v2(Q), w1(I)
HV Battery
1 L
1 M
+
–
Hybrid Vehicle Battery
Hybrid Vehicle Battery
Busbar Module
Busbar Module
VA11 VA12 VA13 TBO GBO TB1 GB1 TB2 GB2
VA15 VA16 VA17 VA18 VA19
G V–B L R R W W B B
V–B L W–B G R–B
R R W W B B
16 N 12 N 8 N 10 C 20 C 9 C 19 C 8 C 18 C
6 O 1 O 12 O 7 O 2 O
VA11 VA12 VA13 TBO GBO TB1 GB1 TB2 GB2
VA15 VA16 VA17 VA18 VA19
c5(G), i2(N), j2(C), j3(O), u2(E), u3(P), v2(Q)
Battery Voltage Sensor

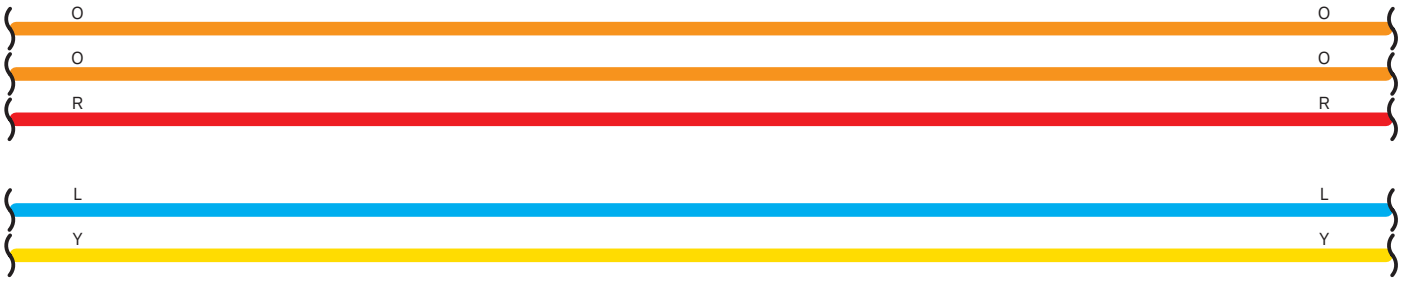
O
O
O
O
R
R
L
L
Y
Y

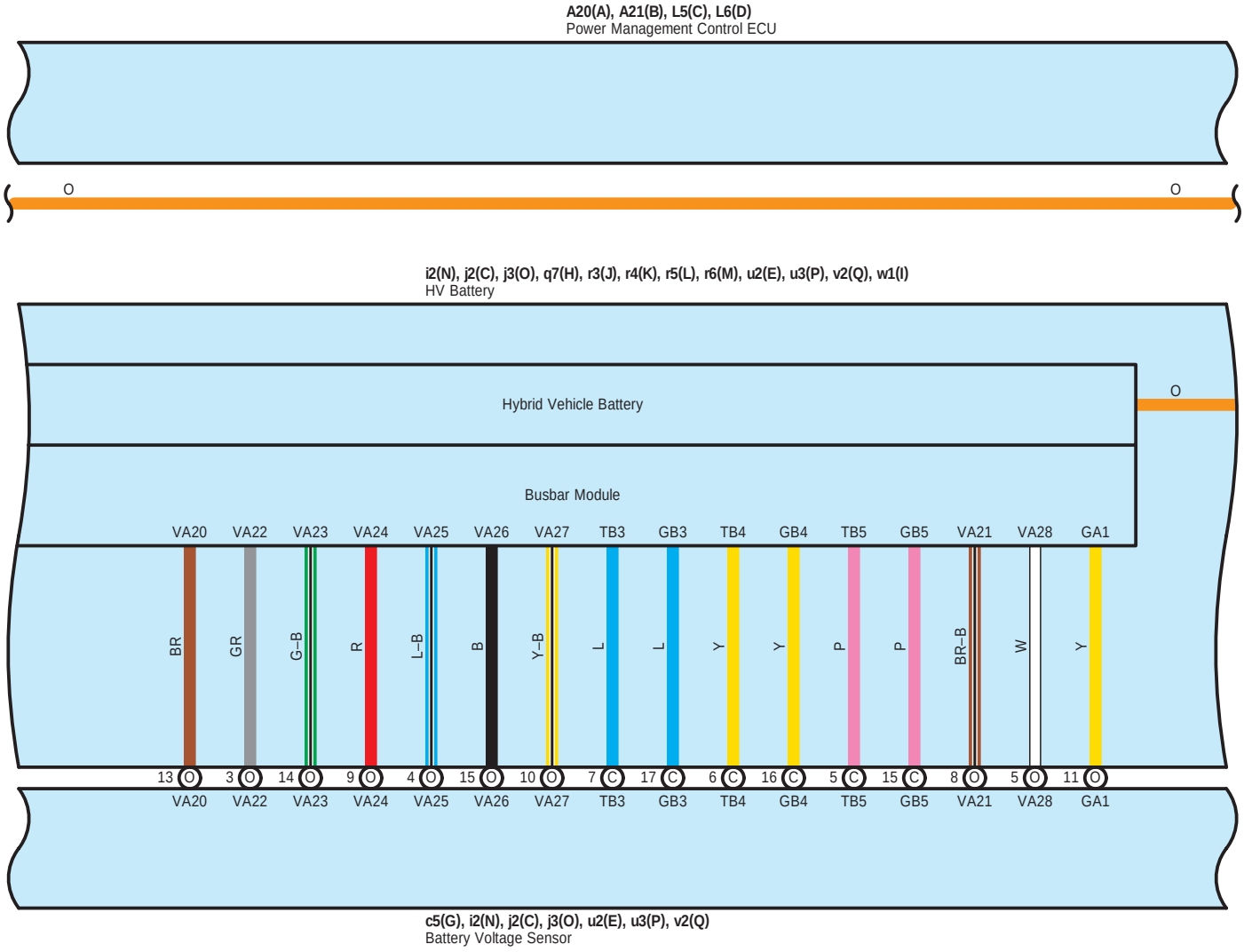
A20(A), A21(B), L5(C), L6(D)
Power Management Control ECU
O
O
i2(N), j2(C), j3(O), q7(H), r3(J), r4(K), r5(L), r6(M), u2(E), u3(P), v2(Q), w1(I)
HV Battery
Hybrid Vehicle Battery
O
Busbar Module
VA20 VA22 VA23 VA24 VA25 VA26 VA27 TB3 GB3 TB4 GB4 TB5 GB5 VA21 VA28 GA1
BR GR G–B R L–B B Y–B L L Y Y P P BR–B W Y
13 O 3 O 14 O 9 O 4 O 15 O 10 O 7 C 17 C 6 C 16 C 5 C 15 C 8 O 5 O 11 O
VA20 VA22 VA23 VA24 VA25 VA26 VA27 TB3 GB3 TB4 GB4 TB5 GB5 VA21 VA28 GA1
c5(G), i2(N), j2(C), j3(O), u2(E), u3(P), v2(Q)
Battery Voltage Sensor

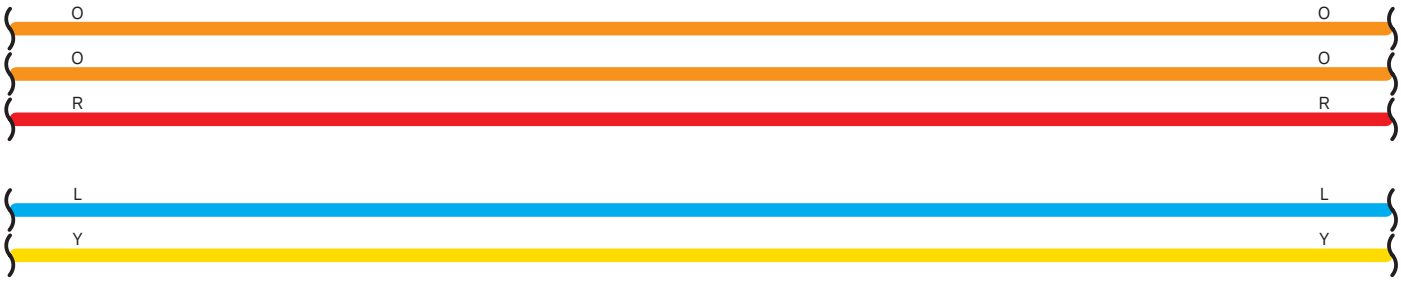
O
O
O
O
R
R
L
L
Y
Y

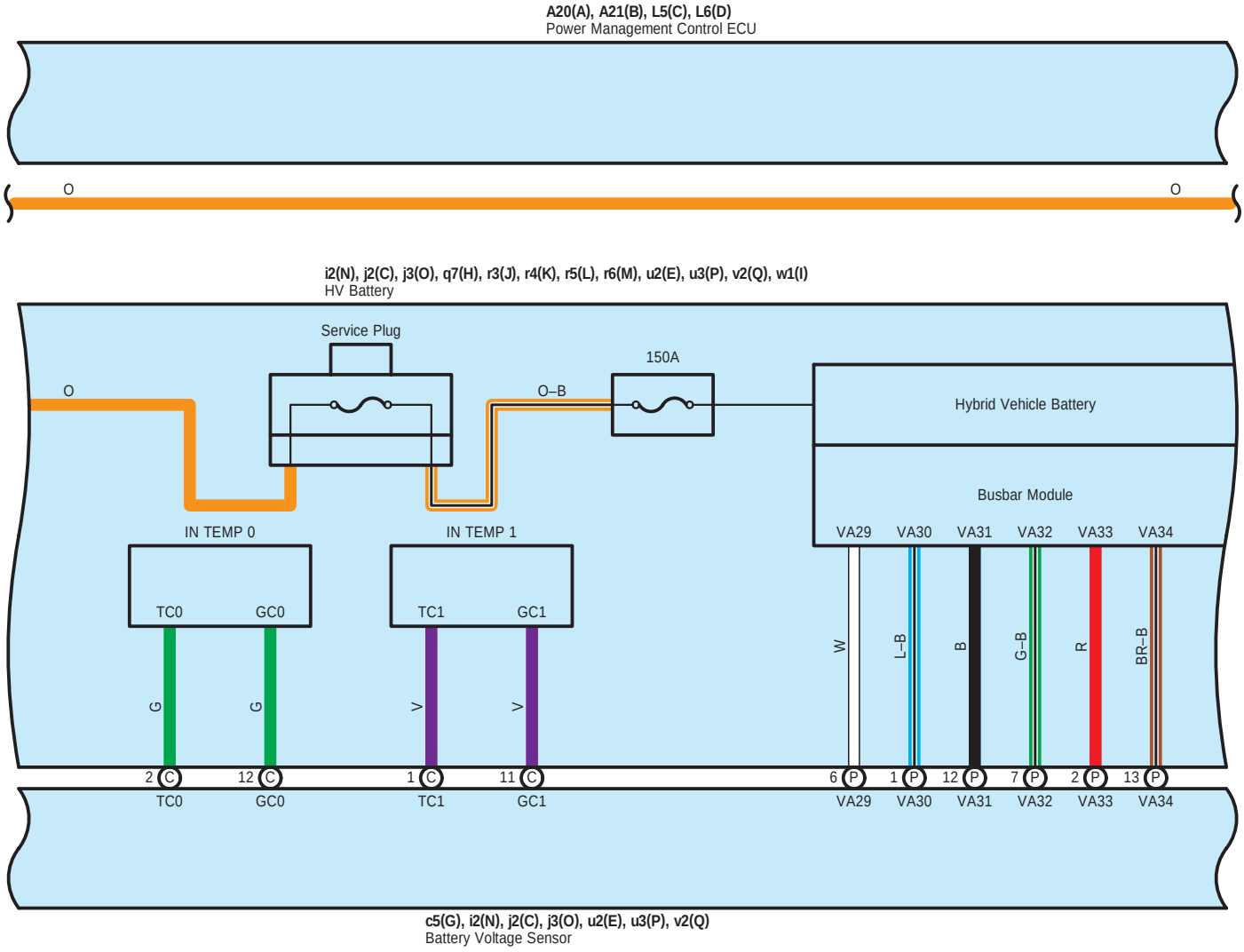
A20(A), A21(B), L5(C), L6(D)
Power Management Control ECU
O
O
i2(N), j2(C), j3(O), q7(H), r3(J), r4(K), r5(L), r6(M), u2(E), u3(P), v2(Q), w1(I)
HV Battery
Service Plug
150A
O
O–B
Hybrid Vehicle Battery
Busbar Module
IN TEMP 0
IN TEMP 1
VA29
VA30
VA31
VA32
VA33
VA34
TC0
GC0
TC1
GC1
G
G
V
V
W
L–B
B
G–B
R
BR–B
2 C
12 C
1 C
11 C
6 P
1 P
12 P
7 P
2 P
13 P
TC0
GC0
TC1
GC1
VA29
VA30
VA31
VA32
VA33
VA34
c5(G), i2(N), j2(C), j3(O), u2(E), u3(P), v2(Q)
Battery Voltage Sensor

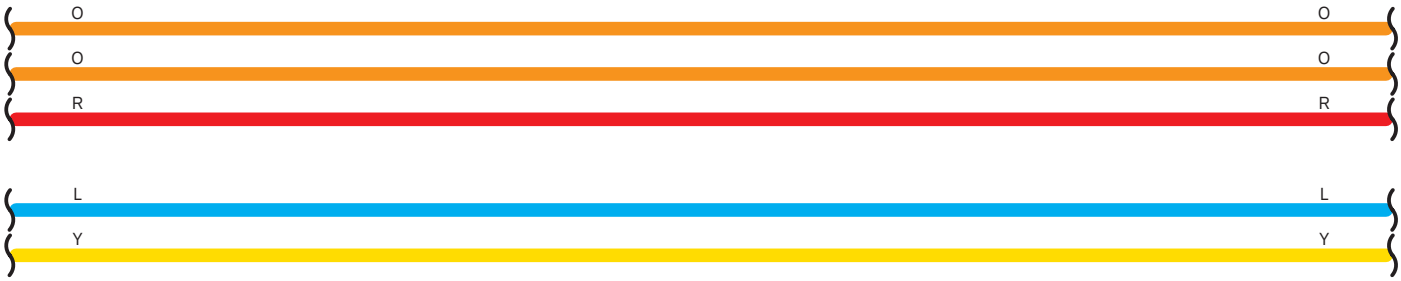
O
O
O
O
R
R
L
L
Y
Y

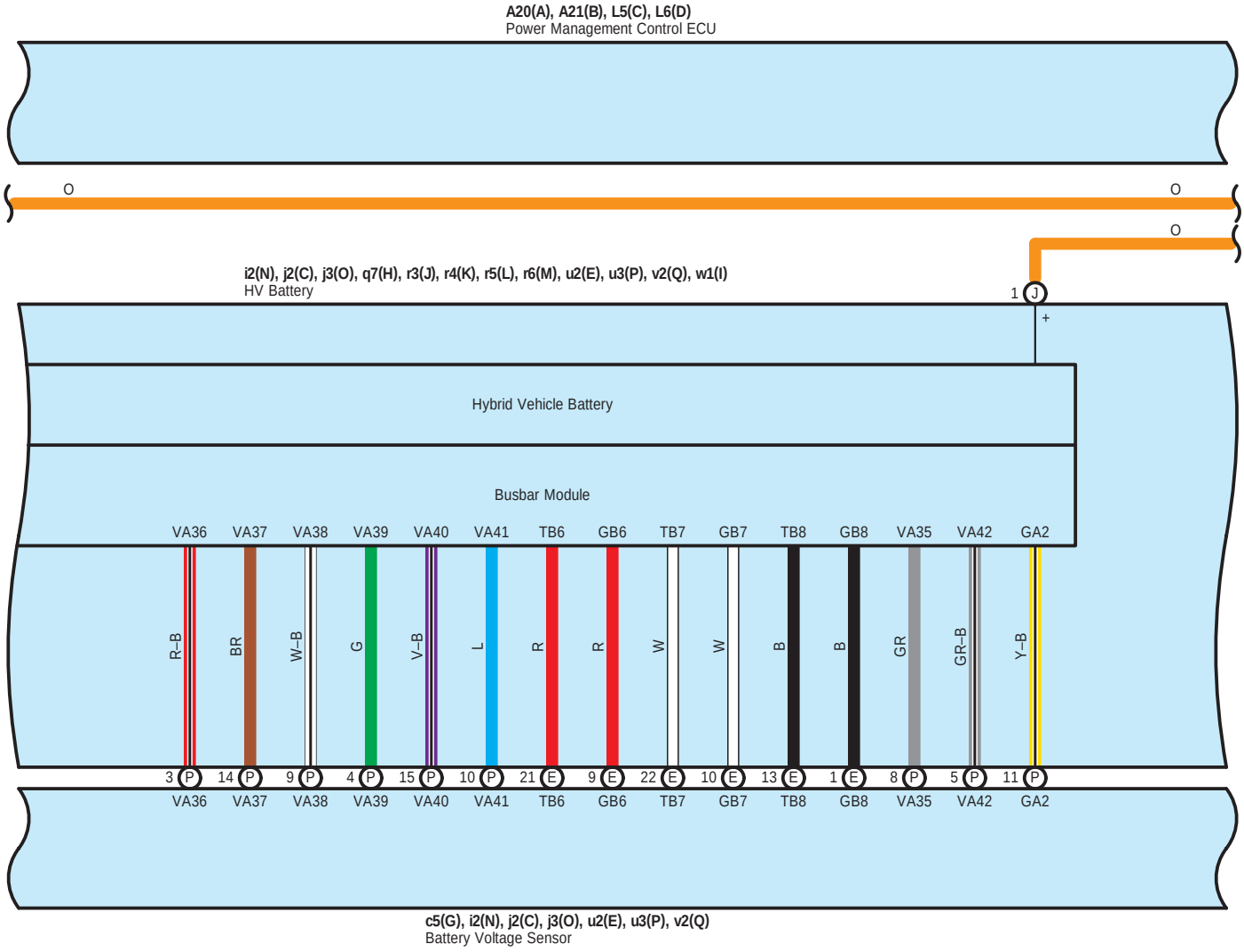
A20(A), A21(B), L5(C), L6(D)
Power Management Control ECU
O
O
O
i2(N), j2(C), j3(O), q7(H), r3(J), r4(K), r5(L), r6(M), u2(E), u3(P), v2(Q), w1(I)
HV Battery
1 J
+
Hybrid Vehicle Battery
Busbar Module
VA36 VA37 VA38 VA39 VA40 VA41 TB6 GB6 TB7 GB7 TB8 GB8 VA35 VA42 GA2
R–B BR W–B G V–B L R R W W B B GR GR–B Y–B
3 P 14 P 9 P 4 P 15 P 10 P 21 E 9 E 22 E 10 E 13 E 1 E 8 P 5 P 11 P
VA36 VA37 VA38 VA39 VA40 VA41 TB6 GB6 TB7 GB7 TB8 GB8 VA35 VA42 GA2
c5(G), i2(N), j2(C), j3(O), u2(E), u3(P), v2(Q)
Battery Voltage Sensor

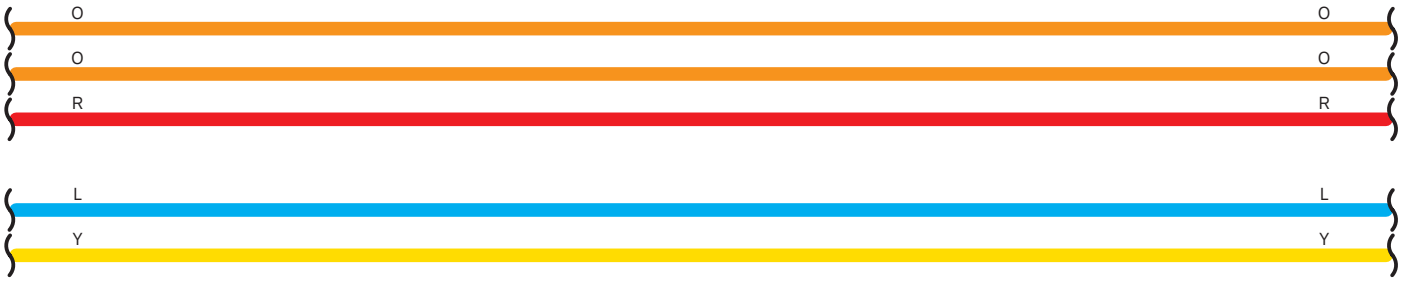
O
O
O
O
R
R
L
L
Y
Y

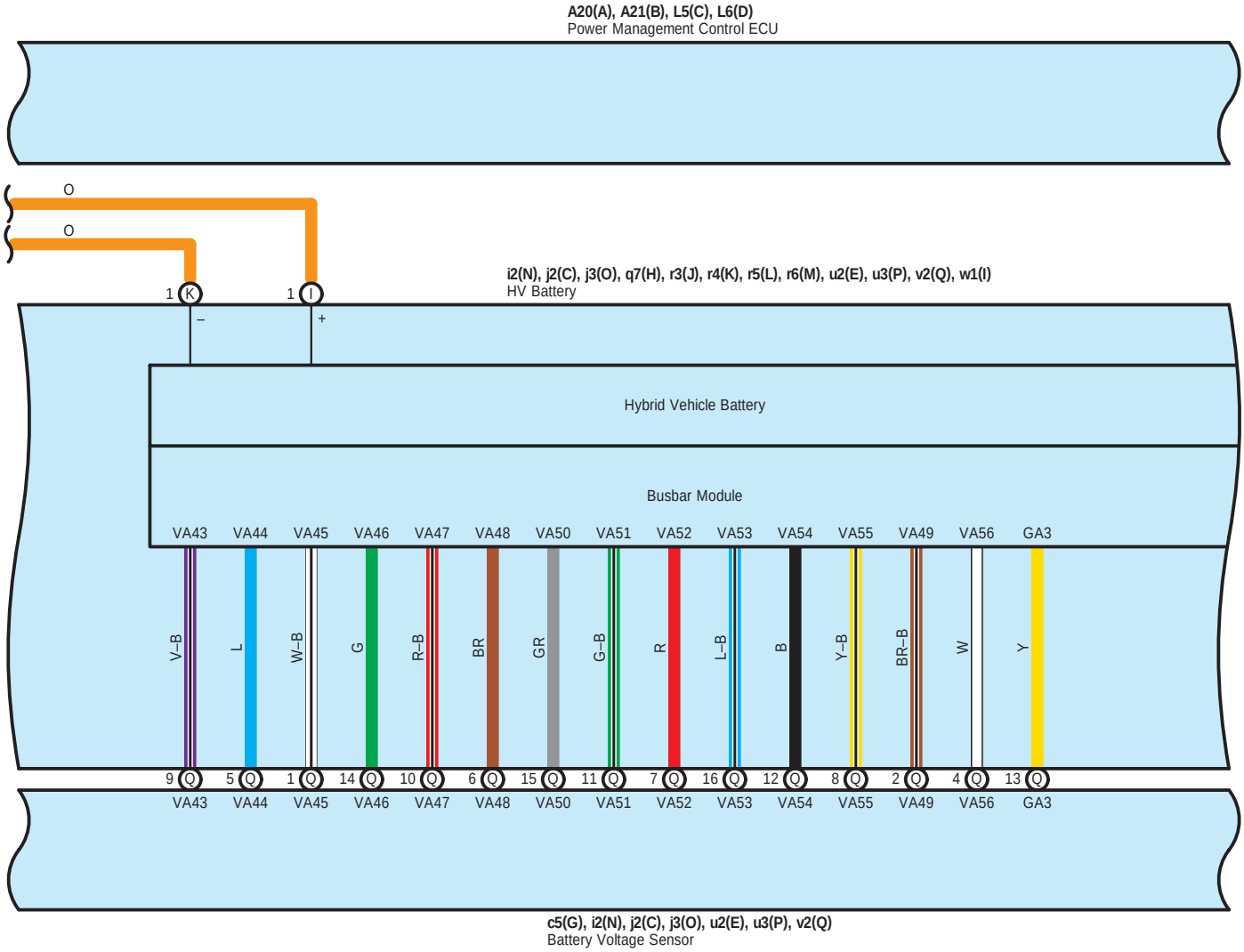
A20(A), A21(B), L5(C), L6(D)
Power Management Control ECU
O
O
1 K
1 I
–
+
i2(N), j2(C), j3(O), q7(H), r3(J), r4(K), r5(L), r6(M), u2(E), u3(P), v2(Q), w1(I)
HV Battery
Hybrid Vehicle Battery
Busbar Module
VA43 VA44 VA45 VA46 VA47 VA48 VA50 VA51 VA52 VA53 VA54 VA55 VA49 VA56 GA3
V–B L W–B G R–B BR GR G–B R L–B B Y–B BR–B W Y
9 Q 5 Q 1 Q 14 Q 10 Q 6 Q 15 Q 11 Q 7 Q 16 Q 12 Q 8 Q 2 Q 4 Q 13 Q
VA43 VA44 VA45 VA46 VA47 VA48 VA50 VA51 VA52 VA53 VA54 VA55 VA49 VA56 GA3
c5(G), i2(N), j2(C), j3(O), u2(E), u3(P), v2(Q)
Battery Voltage Sensor

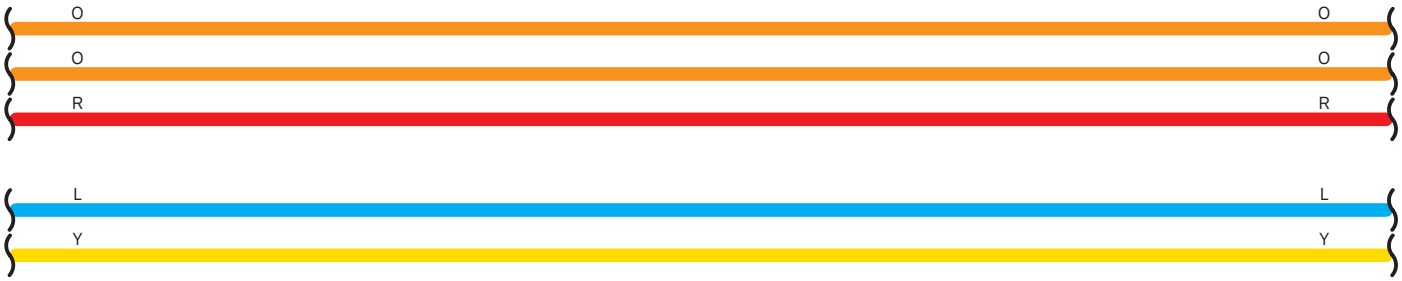
O O
O O
R R
L L
Y Y

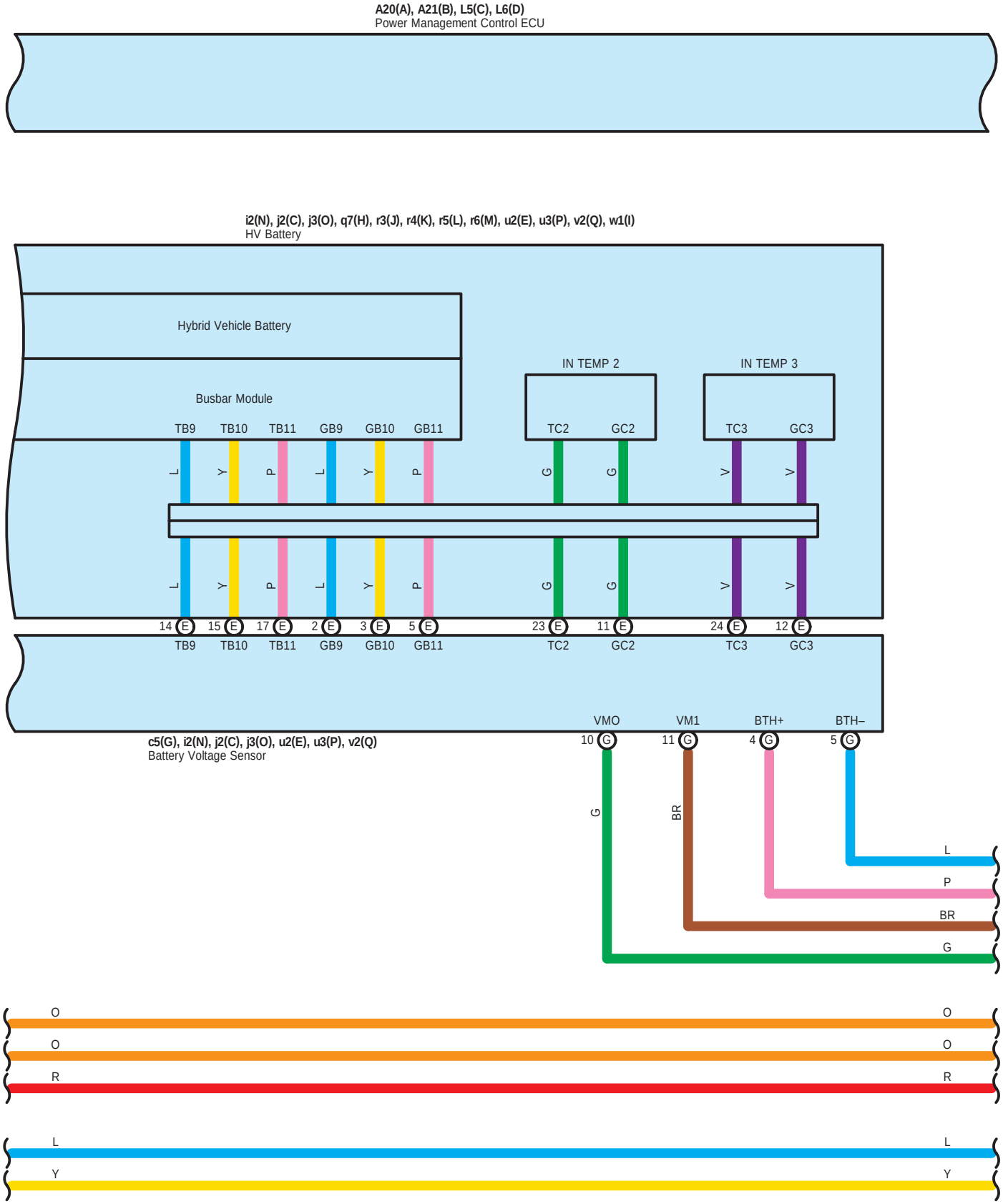
A20(A), A21(B), L5(C), L6(D)
Power Management Control ECU
i2(N), j2(C), j3(O), q7(H), r3(J), r4(K), r5(L), r6(M), u2(E), u3(P), v2(Q), w1(I)
HV Battery
Hybrid Vehicle Battery
Busbar Module
IN TEMP 2
IN TEMP 3
TB9
TB10
TB11
GB9
GB10
GB11
TC2
GC2
TC3
GC3
L
Y
P
G
V
14 E
15 E
17 E
2 E
3 E
5 E
23 E
11 E
24 E
12 E
VMO
VM1
BTH+
BTH–
10 G
11 G
4 G
5 G
c5(G), i2(N), j2(C), j3(O), u2(E), u3(P), v2(Q)
Battery Voltage Sensor
BR
O
R

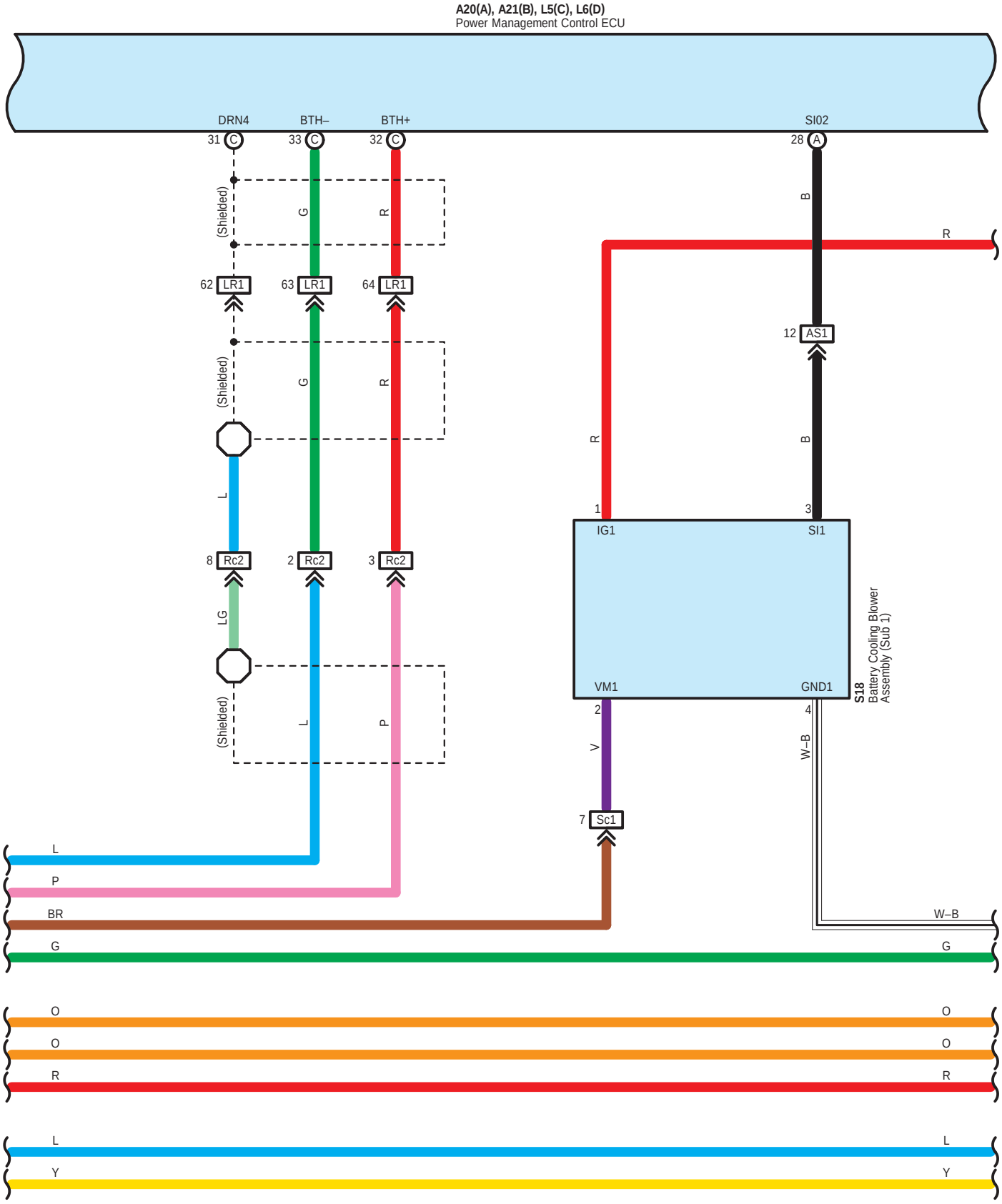
A20(A), A21(B), L5(C), L6(D)
Power Management Control ECU
DRN4
BTH–
BTH+
SI02
31 C
33 C
32 C
28 A
(Shielded)
G
R
B
R
62 LR1
63 LR1
64 LR1
12 AS1
(Shielded)
G
R
R
B
L
1
3
IG1
SI1
8 Rc2
2 Rc2
3 Rc2
LG
VM1
GND1
S18
Battery Cooling Blower Assembly (Sub 1)
2
4
(Shielded)
L
P
V
W–B
7 Sc1
L
P
BR
W–B
G
G
O
O
O
O
R
R
L
L
Y
Y

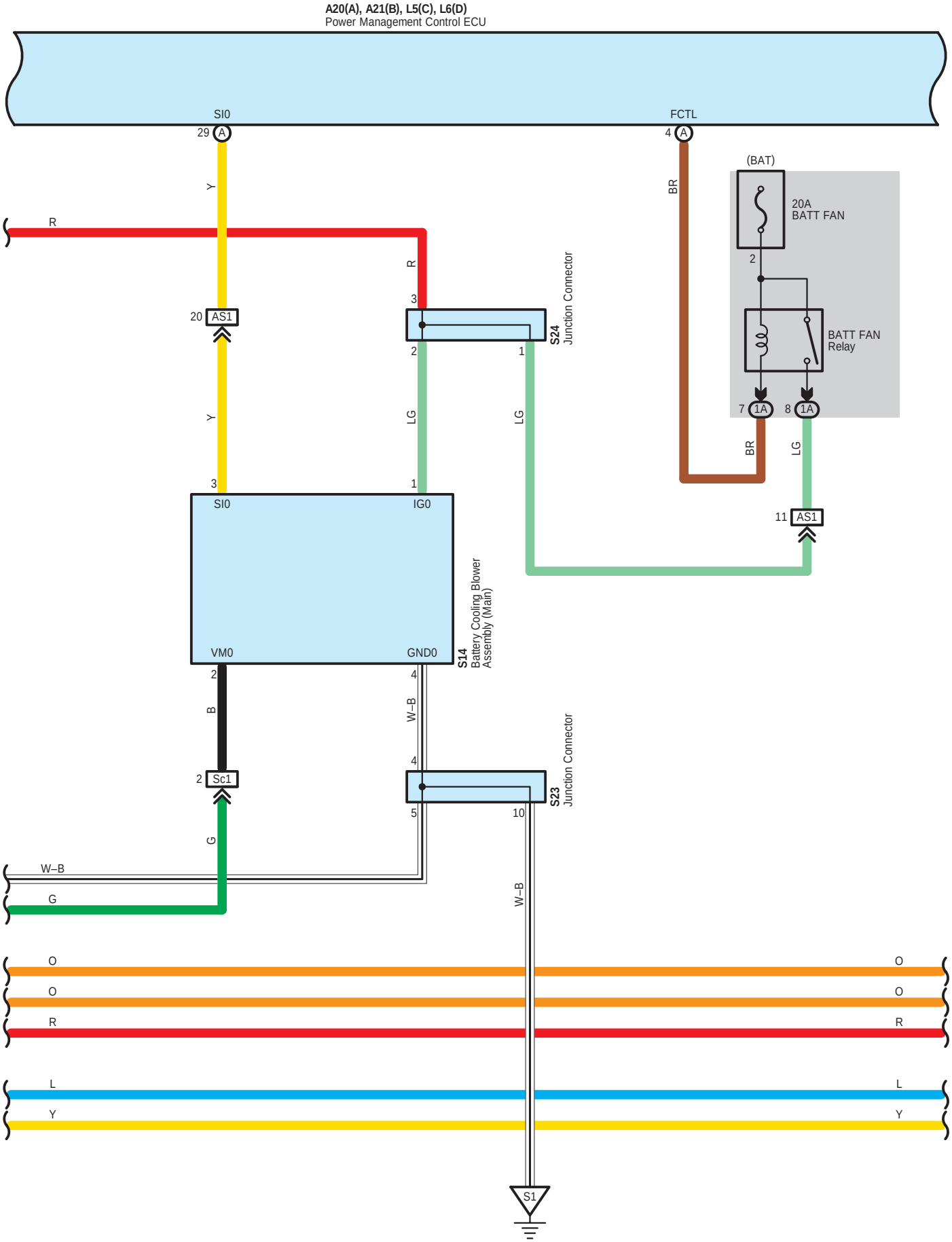
A20(A), A21(B), L5(C), L6(D)
Power Management Control ECU
SI0
29 A
FCTL
4 A
(BAT)
20A
BATT FAN
2
BATT FAN
Relay
7 1A
8 1A
BR
LG
Y
R
20 AS1
3
2
1
S24
Junction Connector
LG
3
1
SI0
IG0
VM0
GND0
S14
Battery Cooling Blower
Assembly (Main)
11 AS1
2
4
B
W–B
2 Sc1
4
5
10
S23
Junction Connector
G
W–B
O
R
L
Y
S1

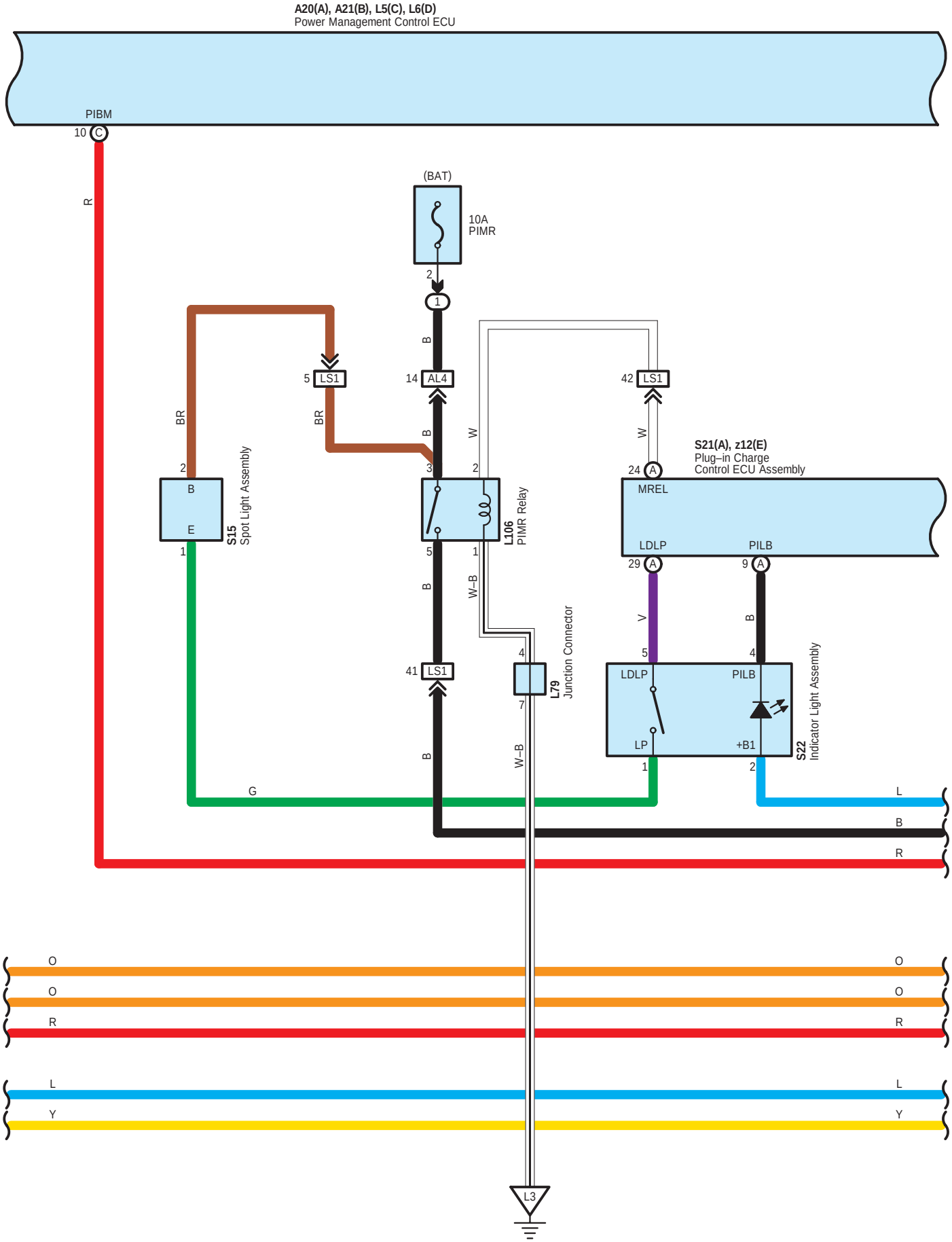
A20(A), A21(B), L5(C), L6(D)
Power Management Control ECU
PIBM
10 C
R
(BAT)
10A
PIMR
2
1
B
5 LS1
14 AL4
42 LS1
BR
BR
B
W
W
2
3
2
24 A
MREL
S21(A), z12(E)
Plug–in Charge
Control ECU Assembly
B
E
1
S15
Spot Light Assembly
5
1
L106
PIMR Relay
LDLP
PILB
29 A
9 A
B
W–B
V
B
4
5
4
41 LS1
L79
Junction Connector
LDLP
PILB
7
LP
+B1
S22
Indicator Light Assembly
B
W–B
1
2
G
L
B
R
O
O
R
L
Y
L3

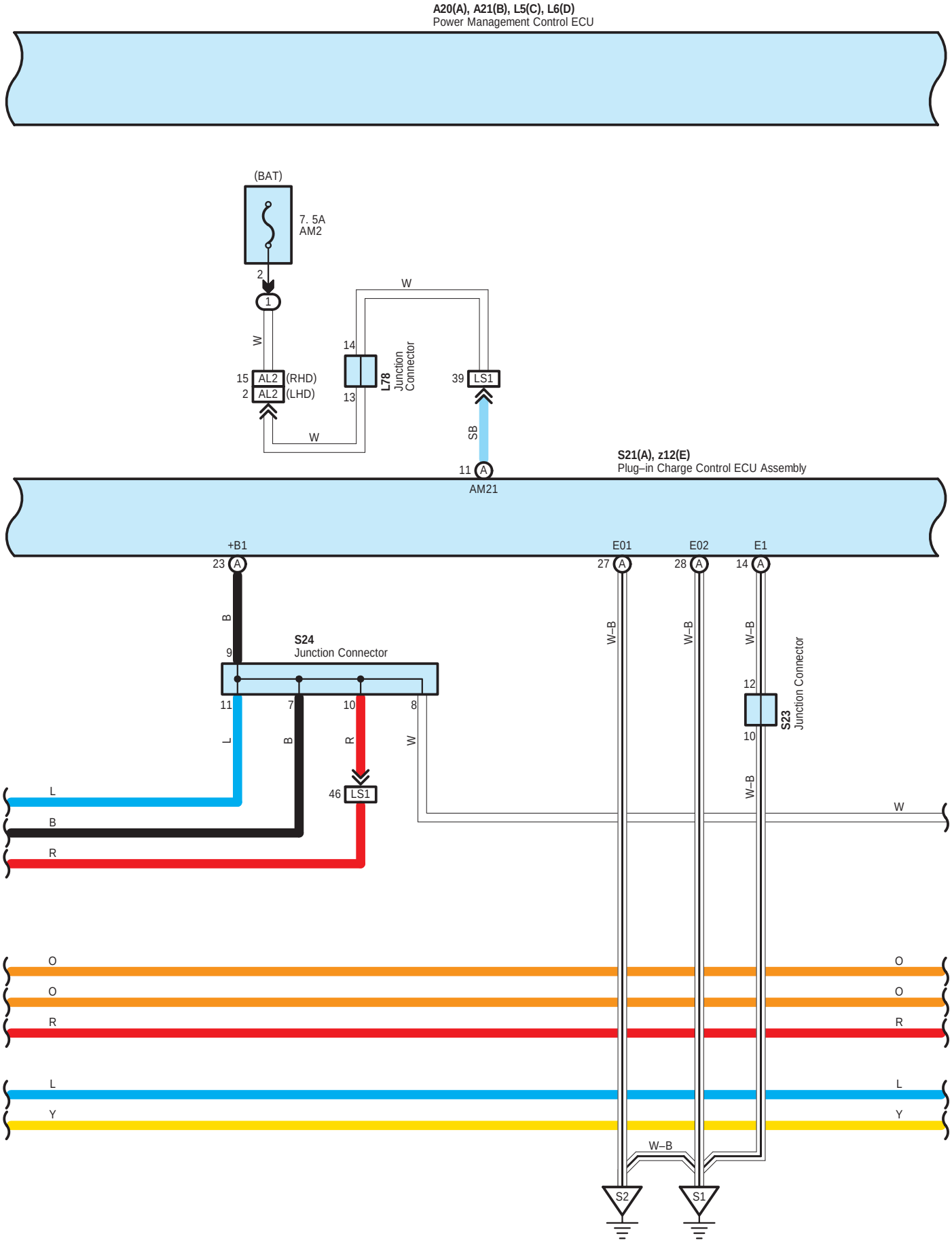
A20(A), A21(B), L5(C), L6(D)
Power Management Control ECU
(BAT)
7. 5A
AM2
2
1
W
15 AL2 (RHD)
2 AL2 (LHD)
14
13
L78
Junction
Connector
39 LS1
SB
11 A
AM21
S21(A), z12(E)
Plug–in Charge Control ECU Assembly
+B1
23 A
B
9
S24
Junction Connector
11
7
10
8
L
B
R
W
46 LS1
E01
27 A
E02
28 A
E1
14 A
W–B
12
10
S23
Junction Connector
O
R
L
Y
S2
S1

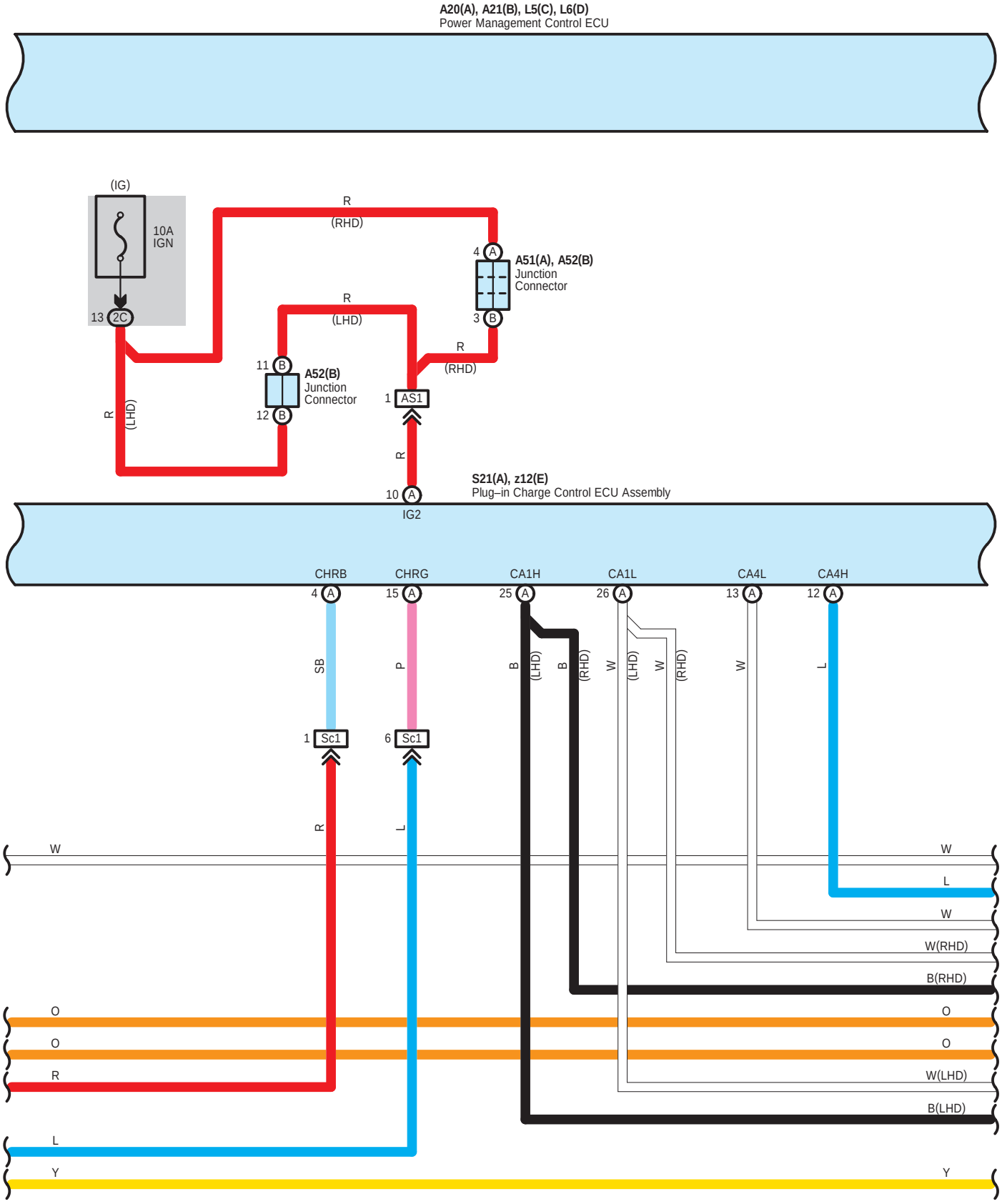
A20(A), A21(B), L5(C), L6(D)
Power Management Control ECU
(IG)
10A
IGN
13 2C
R
(RHD)
4 A
A51(A), A52(B)
Junction
Connector
3 B
R
(LHD)
R
(RHD)
11 B
A52(B)
Junction
Connector
12 B
1 AS1
R
(LHD)
R
10 A
IG2
S21(A), z12(E)
Plug–in Charge Control ECU Assembly
CHRB
CHRG
CA1H
CA1L
CA4L
CA4H
4 A
15 A
25 A
26 A
13 A
12 A
SB
P
B
(LHD)
B
(RHD)
W
(LHD)
W
(RHD)
W
L
1 Sc1
6 Sc1
R
L
W
L
W
W(RHD)
B(RHD)
O
O
R
O
O
W(LHD)
B(LHD)
L
Y
Y

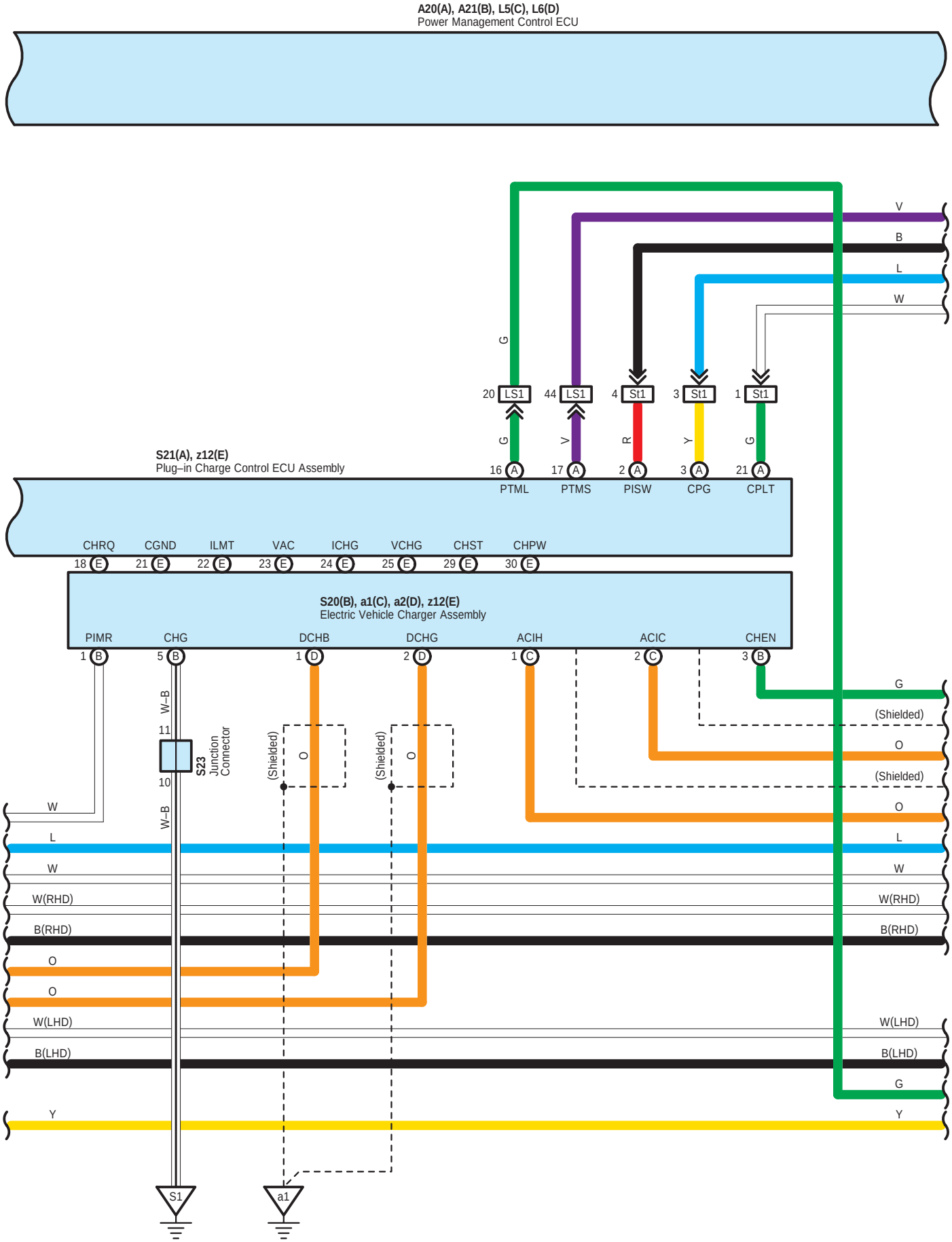
A20(A), A21(B), L5(C), L6(D)
Power Management Control ECU
S21(A), z12(E)
Plug–in Charge Control ECU Assembly
20 LS1
44 LS1
4 St1
3 St1
1 St1
16 A PTML
17 A PTMS
2 A PISW
3 A CPG
21 A CPLT
CHRQ 18 E
CGND 21 E
ILMT 22 E
VAC 23 E
ICHG 24 E
VCHG 25 E
CHST 29 E
CHPW 30 E
S20(B), a1(C), a2(D), z12(E)
Electric Vehicle Charger Assembly
PIMR 1 B
CHG 5 B
DCHB 1 D
DCHG 2 D
ACIH 1 C
ACIC 2 C
CHEN 3 B
W–B
11
10
S23
Junction
Connector
(Shielded)
S1
a1
V
B
L
W
G
O
Y
W(RHD)
B(RHD)
W(LHD)
B(LHD)

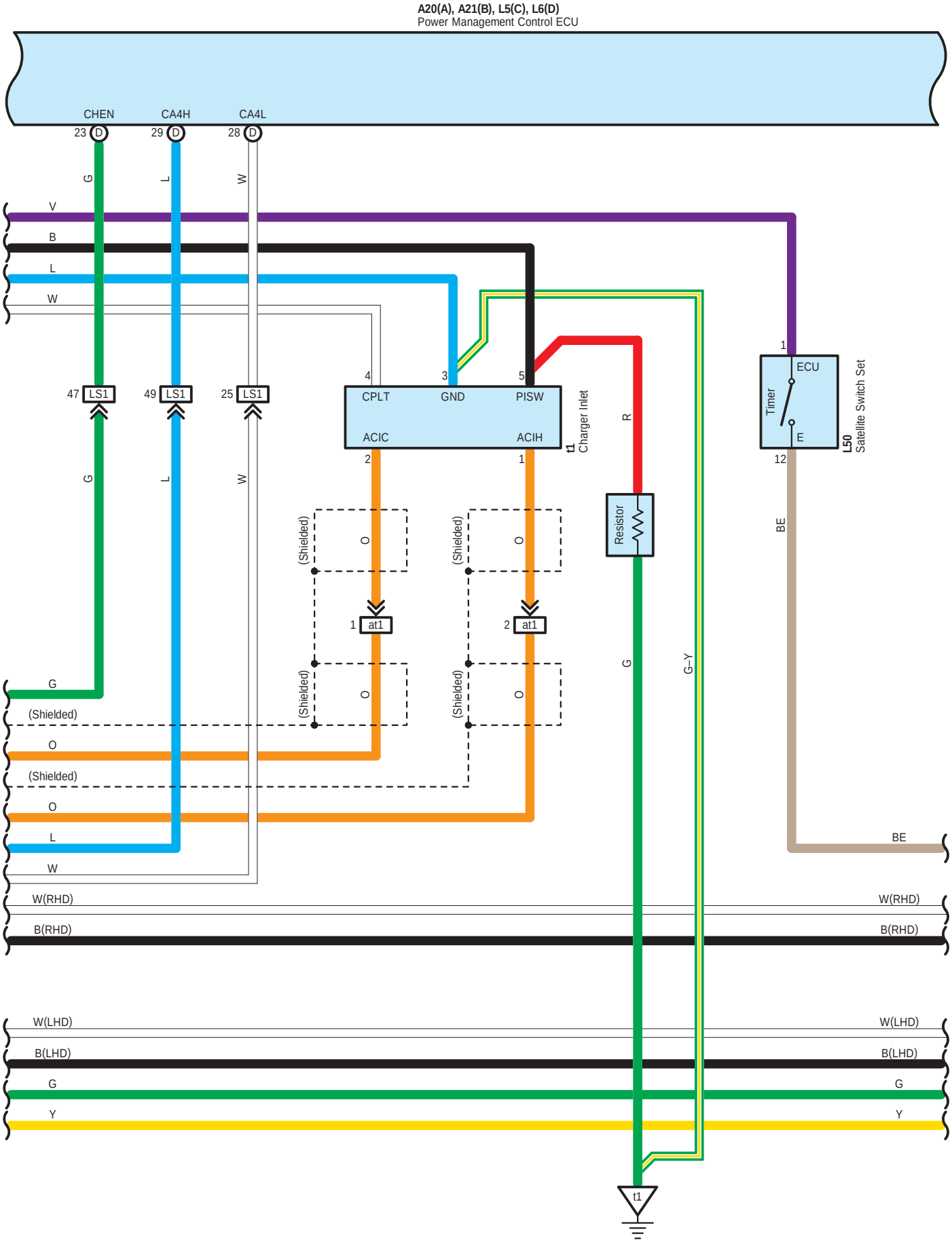
A20(A), A21(B), L5(C), L6(D)
Power Management Control ECU
CHEN
CA4H
CA4L
23 D
29 D
28 D
G
L
W
V
B
L
W
47 LS1
49 LS1
25 LS1
4
3
5
CPLT
GND
PISW
ACIC
ACIH
2
1
t1
Charger Inlet
R
1
ECU
Timer
E
12
L50
Satellite Switch Set
BE
Resistor
(Shielded)
O
1 at1
2 at1
G
G–Y
G
(Shielded)
O
(Shielded)
O
L
W
W(RHD)
B(RHD)
W(LHD)
B(LHD)
G
Y
t1

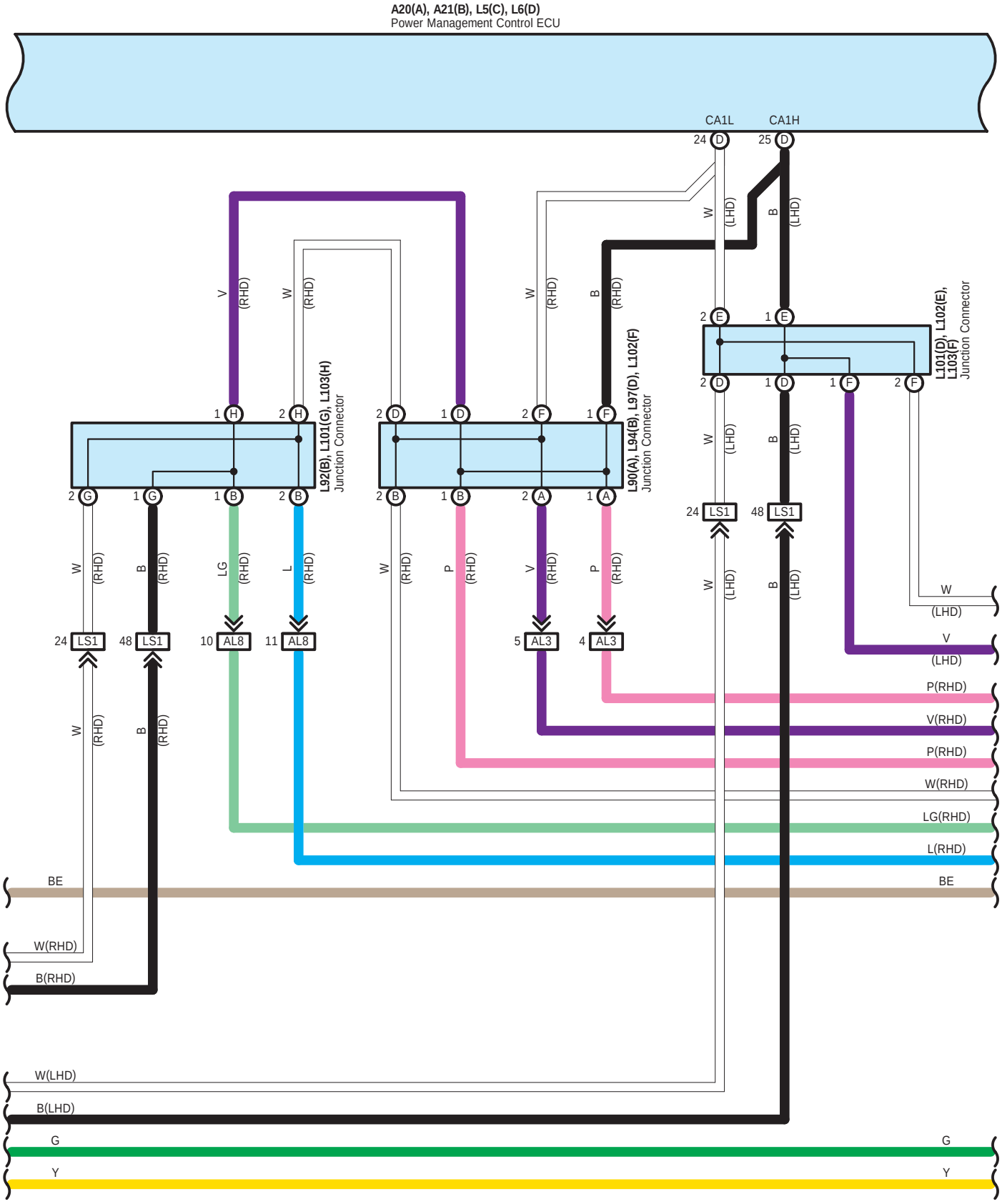
A20(A), A21(B), L5(C), L6(D)
Power Management Control ECU
CA1L
CA1H
24 D
25 D
W (LHD)
B (LHD)
V (RHD)
W (RHD)
W (RHD)
B (RHD)
L92(B), L101(G), L103(H)
Junction Connector
L90(A), L94(B), L97(D), L102(F)
Junction Connector
L101(D), L102(E), L103(F)
Junction Connector
W (RHD)
B (RHD)
LG (RHD)
L (RHD)
W (RHD)
P (RHD)
V (RHD)
P (RHD)
24 LS1
48 LS1
10 AL8
11 AL8
5 AL3
4 AL3
W (LHD)
B (LHD)
W (LHD)
V (LHD)
P(RHD)
V(RHD)
P(RHD)
W(RHD)
LG(RHD)
L(RHD)
BE
W(RHD)
B(RHD)
W(LHD)
B(LHD)
G
Y

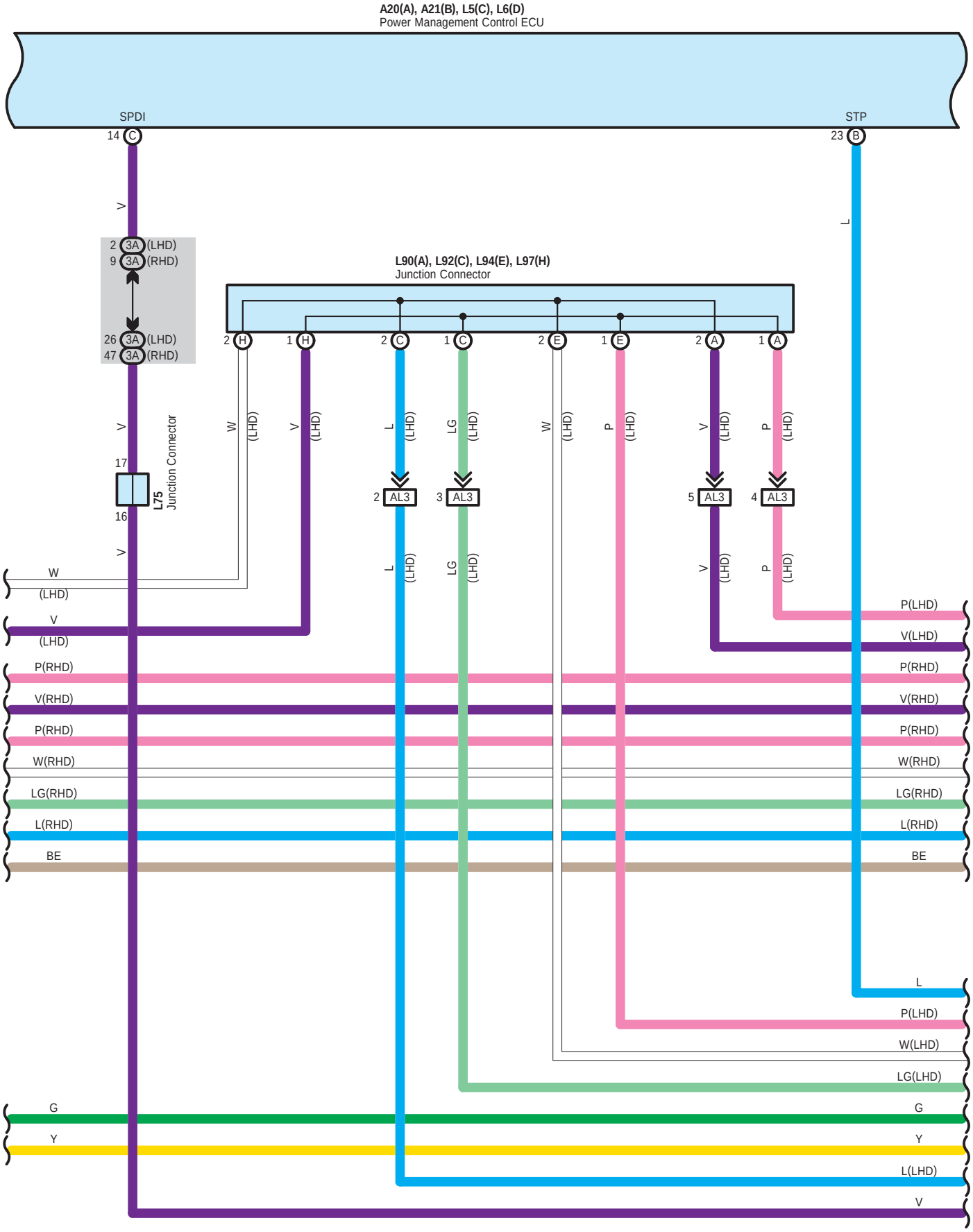
A20(A), A21(B), L5(C), L6(D)
Power Management Control ECU
SPDI
14 C
STP
23 B
2 3A (LHD)
9 3A (RHD)
26 3A (LHD)
47 3A (RHD)
L90(A), L92(C), L94(E), L97(H)
Junction Connector
2 H
1 H
2 C
1 C
2 E
1 E
2 A
1 A
17
16
L75
Junction Connector
2 AL3
3 AL3
5 AL3
4 AL3
W (LHD)
V (LHD)
P(LHD)
V(LHD)
P(RHD)
V(RHD)
W(RHD)
LG(RHD)
L(RHD)
BE
L
P(LHD)
W(LHD)
LG(LHD)
G
Y
L(LHD)
V

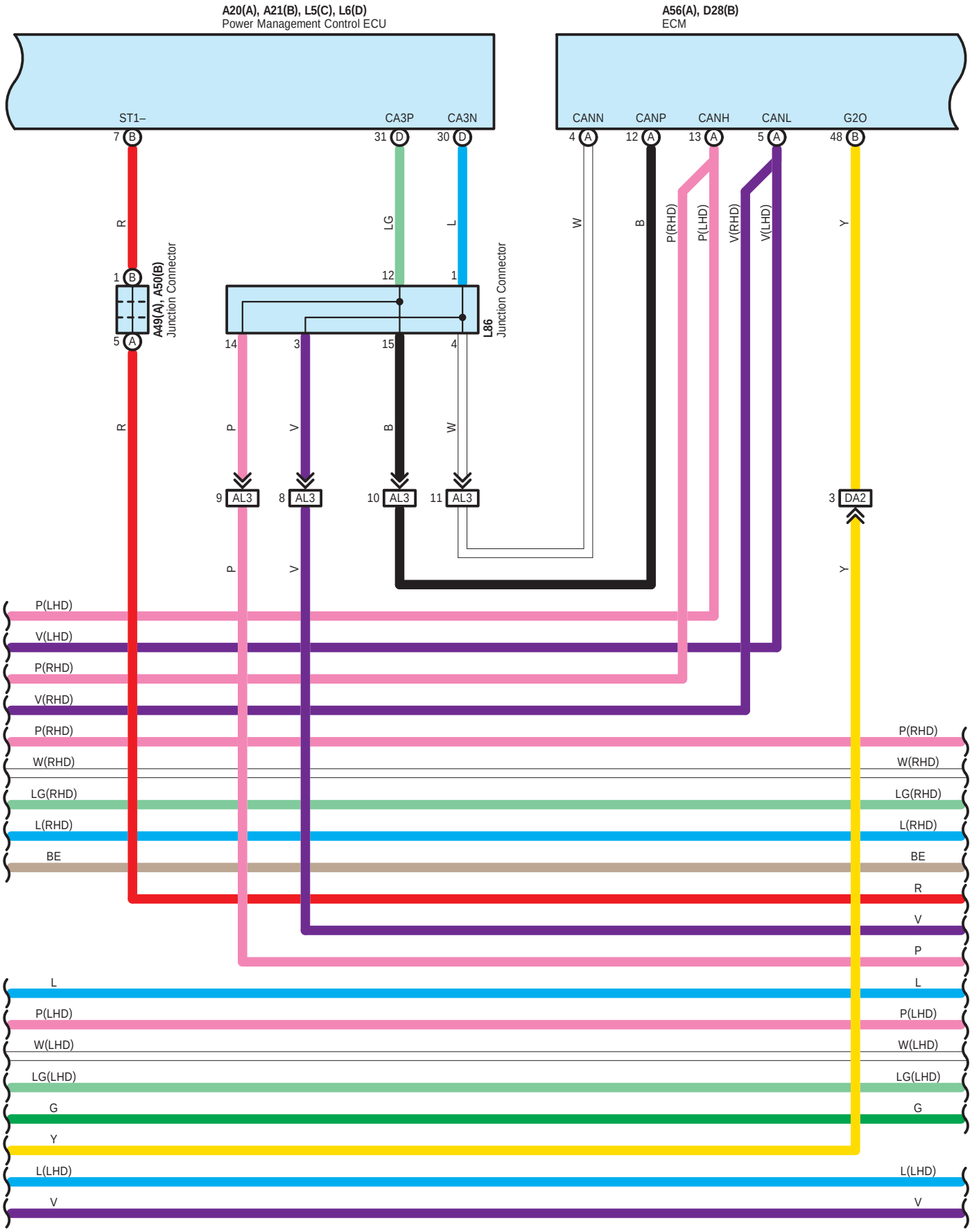
A20(A), A21(B), L5(C), L6(D)
Power Management Control ECU
A56(A), D28(B)
ECM
ST1–
CA3P
CA3N
CANN
CANP
CANH
CANL
G2O
A49(A), A50(B)
Junction Connector
L86
Junction Connector
AL3
DA2
P(LHD)
V(LHD)
P(RHD)
V(RHD)
W(RHD)
LG(RHD)
L(RHD)
BE
R
V
P
L
W(LHD)
LG(LHD)
G
Y
L(LHD)

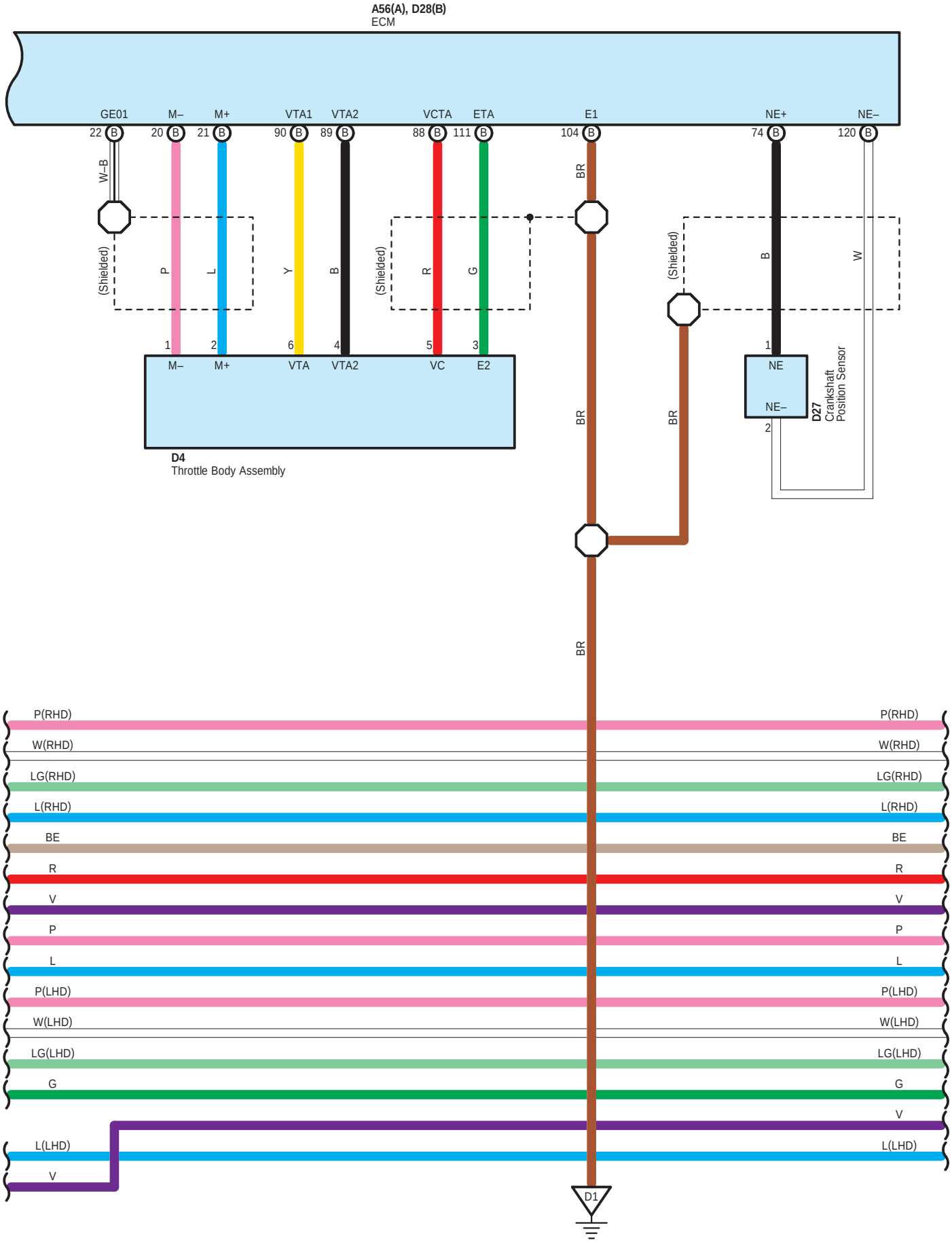
A56(A), D28(B)
ECM
GE01
M–
M+
VTA1
VTA2
VCTA
ETA
E1
NE+
NE–
22 B
20 B
21 B
90 B
89 B
88 B
111 B
104 B
74 B
120 B
W–B
(Shielded)
P
L
Y
B
R
G
BR
W
1
2
6
4
5
3
M–
M+
VTA
VTA2
VC
E2
D4
Throttle Body Assembly
NE
NE–
D27
Crankshaft
Position Sensor
P(RHD)
W(RHD)
LG(RHD)
L(RHD)
BE
R
V
P
L
P(LHD)
W(LHD)
LG(LHD)
G
L(LHD)
D1

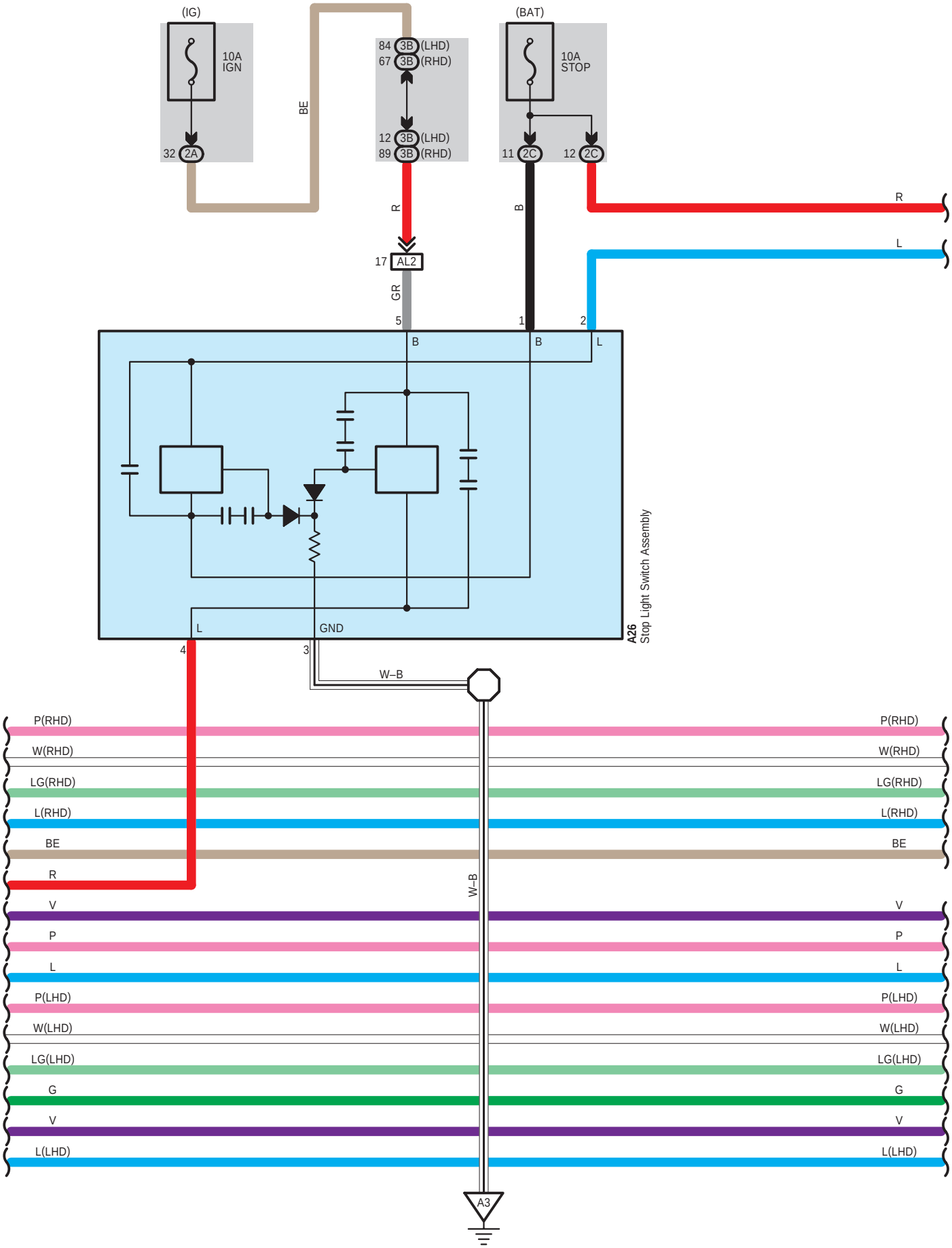
(IG)
10A
IGN
32 2A
BE
84 3B (LHD)
67 3B (RHD)
12 3B (LHD)
89 3B (RHD)
(BAT)
10A
STOP
11 2C
12 2C
R
B
R
L
17 AL2
GR
5
1
2
B
B
L
L
GND
4
3
A26
Stop Light Switch Assembly
W–B
P(RHD)
W(RHD)
LG(RHD)
L(RHD)
BE
R
V
P
L
P(LHD)
W(LHD)
LG(LHD)
G
V
L(LHD)
W–B
A3

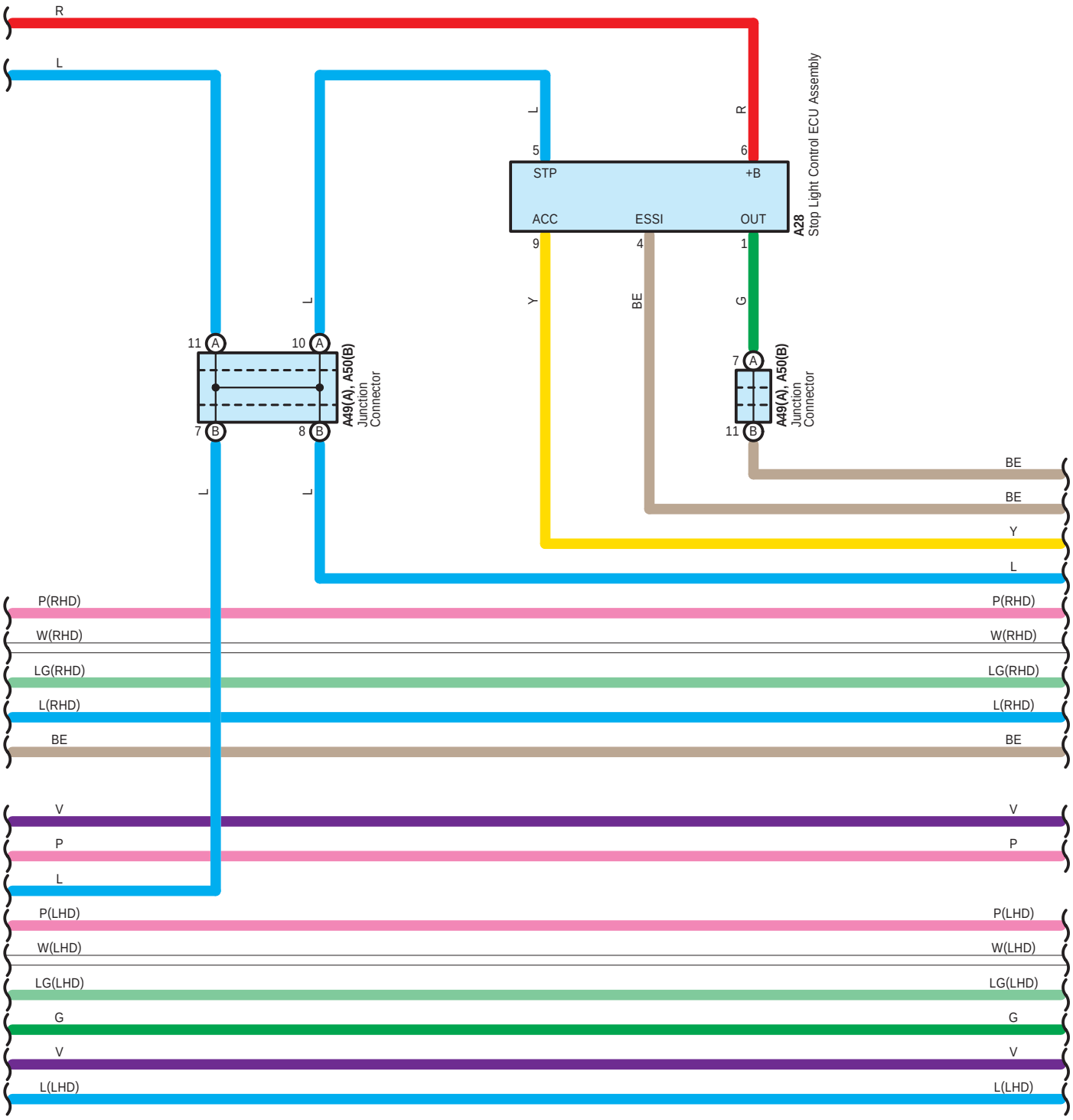
R
L
L
R
5
6
STP
+B
ACC
ESSI
OUT
A28
Stop Light Control ECU Assembly
9
4
1
Y
BE
G
L
11
10
7
8
A49(A), A50(B)
Junction
Connector
7
11
A49(A), A50(B)
Junction
Connector
BE
BE
Y
L
L
L
P(RHD)
W(RHD)
LG(RHD)
L(RHD)
BE
V
P
L
P(LHD)
W(LHD)
LG(LHD)
G
V
L(LHD)

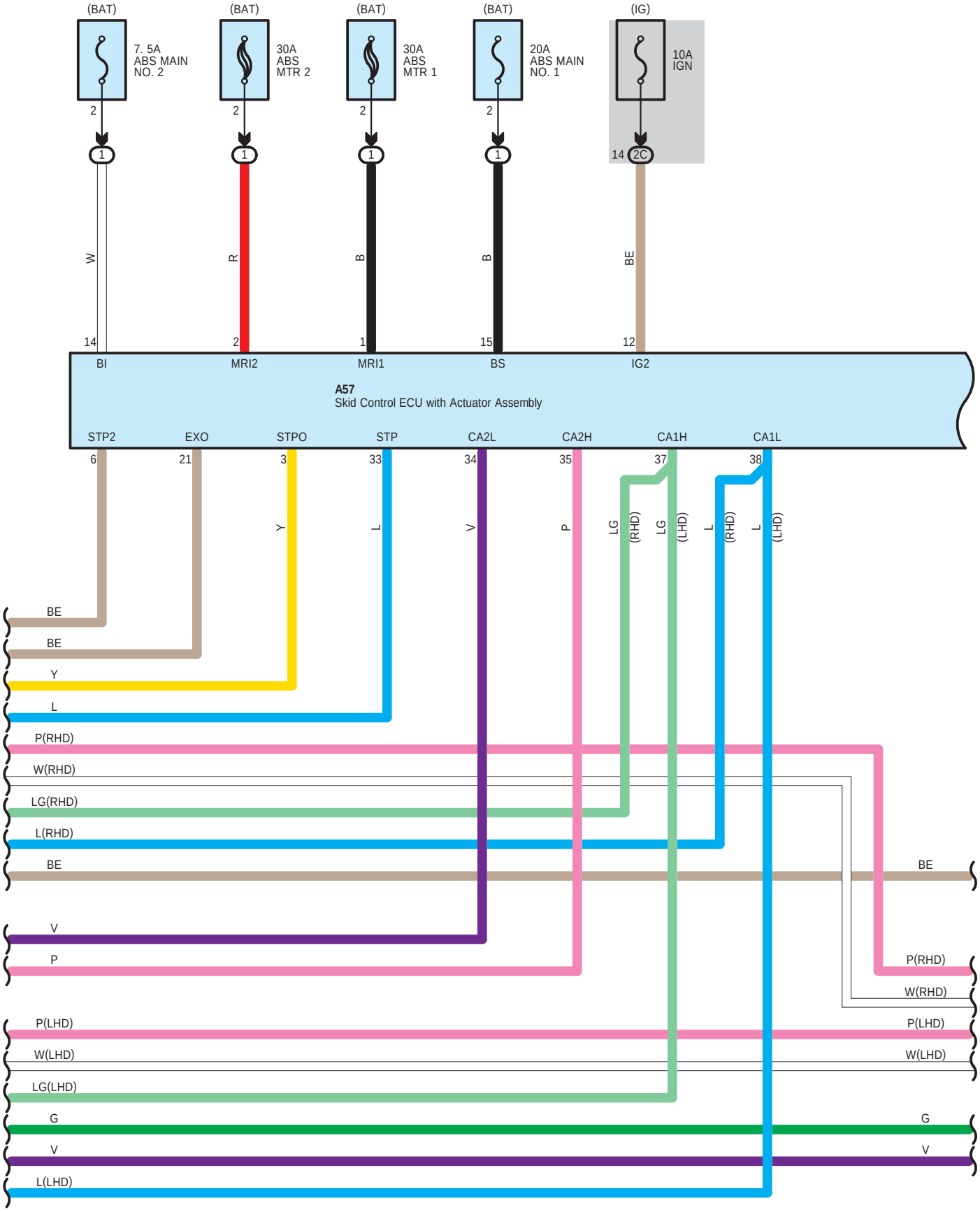
(BAT)
7. 5A
ABS MAIN
NO. 2
(BAT)
30A
ABS
MTR 2
(BAT)
30A
ABS
MTR 1
(BAT)
20A
ABS MAIN
NO. 1
(IG)
10A
IGN
W
R
B
B
BE
BI
MRI2
MRI1
BS
IG2
A57
Skid Control ECU with Actuator Assembly
STP2
EXO
STPO
STP
CA2L
CA2H
CA1H
CA1L
BE
BE
Y
L
P(RHD)
W(RHD)
LG(RHD)
L(RHD)
BE
V
P
P(LHD)
W(LHD)
LG(LHD)
G
V
L(LHD)
P(RHD)
W(RHD)
P(LHD)
W(LHD)
G
V

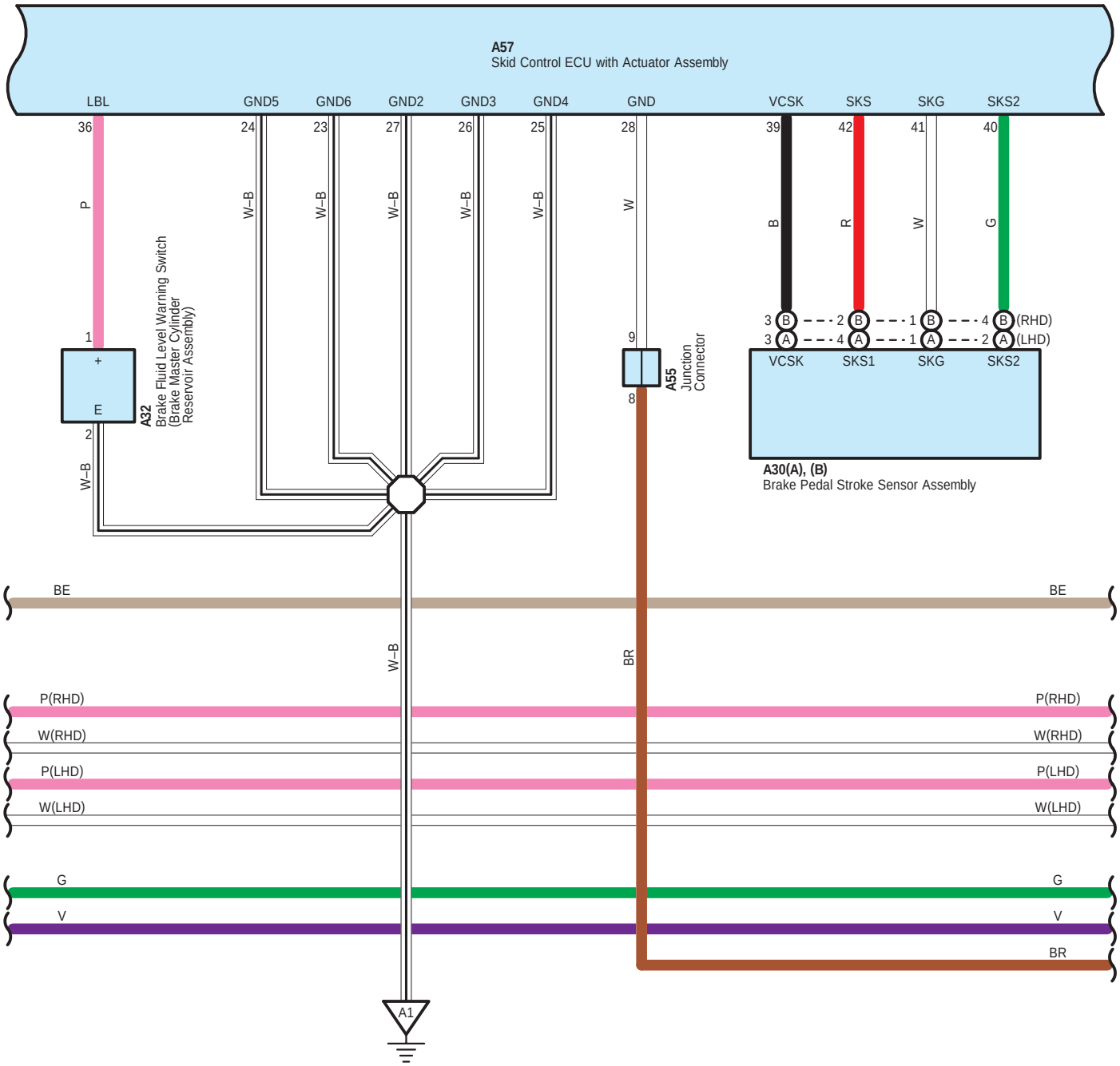
A57
Skid Control ECU with Actuator Assembly
LBL
GND5
GND6
GND2
GND3
GND4
GND
VCSK
SKS
SKG
SKS2
36
24
23
27
26
25
28
39
42
41
40
P
W-B
W
B
R
G
1
+
E
2
A32
Brake Fluid Level Warning Switch
(Brake Master Cylinder
Reservoir Assembly)
9
8
A55
Junction
Connector
3 B
2 B
1 B
4 B
(RHD)
3 A
4 A
1 A
2 A
(LHD)
VCSK
SKS1
SKG
SKS2
A30(A), (B)
Brake Pedal Stroke Sensor Assembly
BE
BR
P(RHD)
W(RHD)
P(LHD)
W(LHD)
G
V
A1

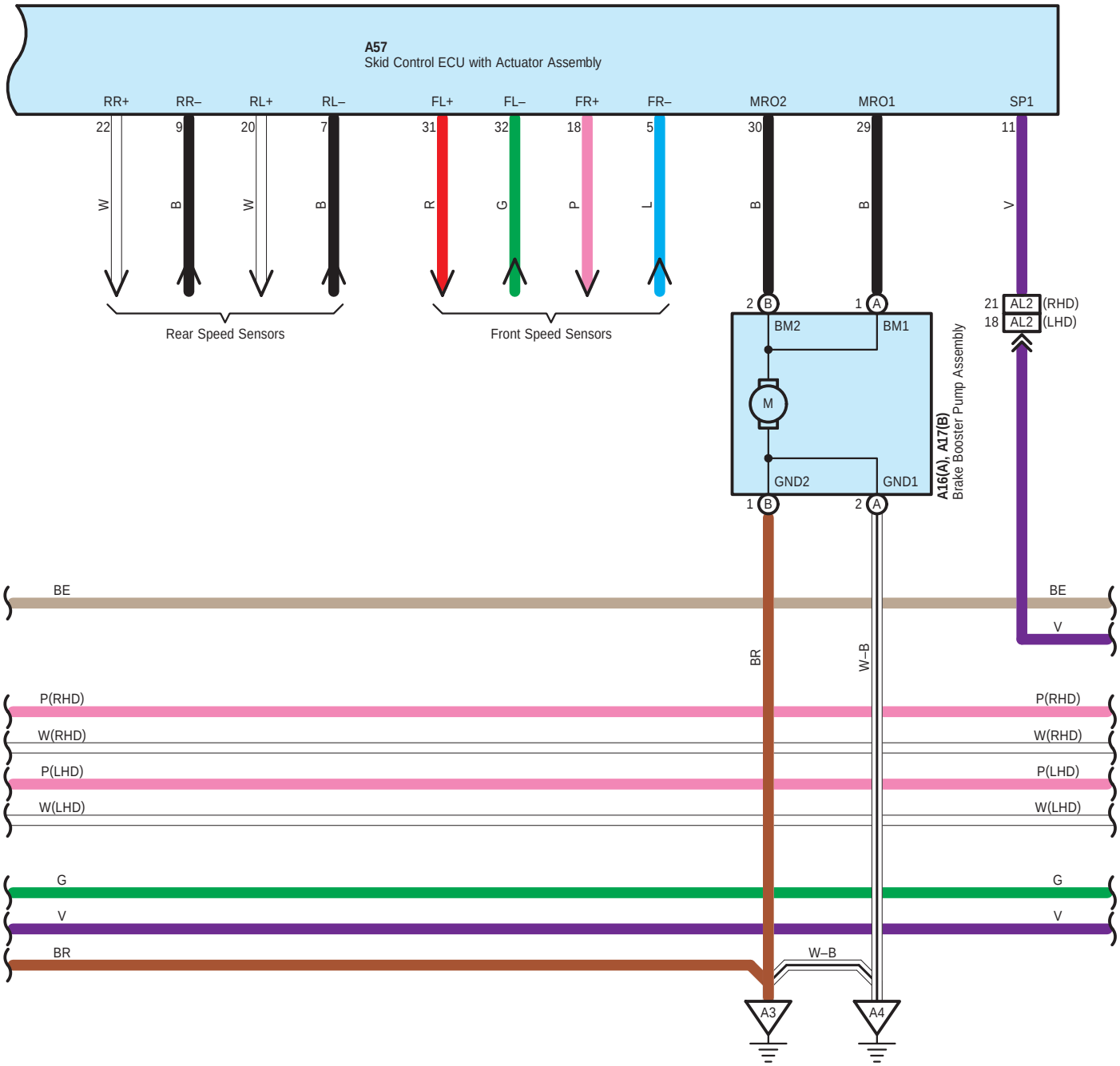
A57
Skid Control ECU with Actuator Assembly
RR+
RR–
RL+
RL–
FL+
FL–
FR+
FR–
MRO2
MRO1
SP1
22
9
20
7
31
32
18
5
30
29
11
W
B
W
B
R
G
P
L
B
B
V
Rear Speed Sensors
Front Speed Sensors
2 B
1 A
BM2
BM1
M
GND2
GND1
1 B
2 A
A16(A), A17(B)
Brake Booster Pump Assembly
21 AL2 (RHD)
18 AL2 (LHD)
BE
BE
V
BR
W–B
P(RHD)
P(RHD)
W(RHD)
W(RHD)
P(LHD)
P(LHD)
W(LHD)
W(LHD)
G
G
V
V
BR
W–B
A3
A4

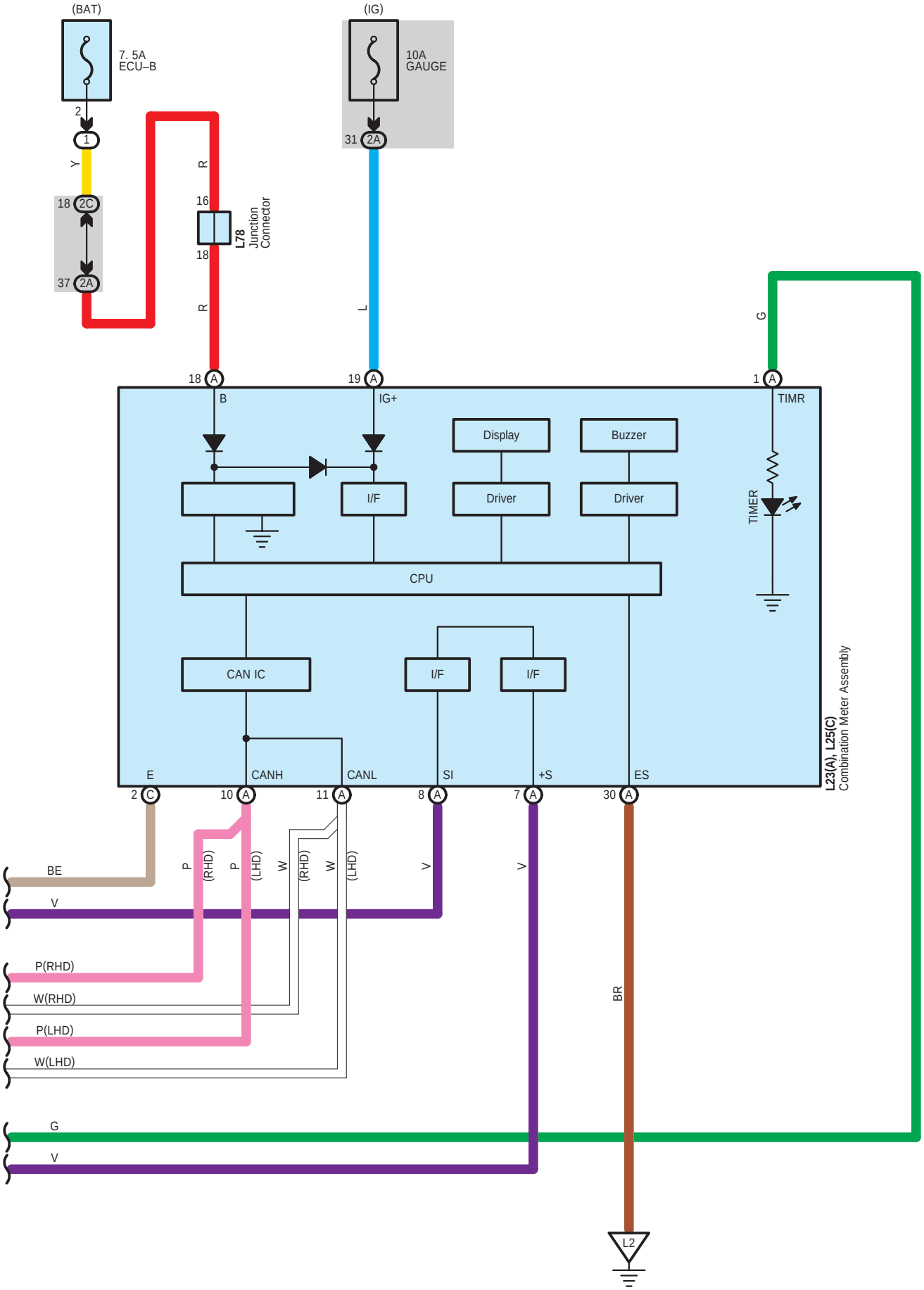
(BAT)
7. 5A
ECU–B
(IG)
10A
GAUGE
L78
Junction
Connector
L23(A), L25(C)
Combination Meter Assembly
B
IG+
TIMR
Display
Buzzer
I/F
Driver
Driver
TIMER
CPU
CAN IC
I/F
I/F
E
CANH
CANL
SI
+S
ES
BE
V
P(RHD)
W(RHD)
P(LHD)
W(LHD)
G
V
BR
L2

A 16
Gray

A 17
Black

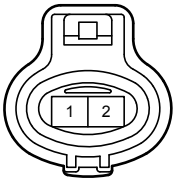

A 20
Gray

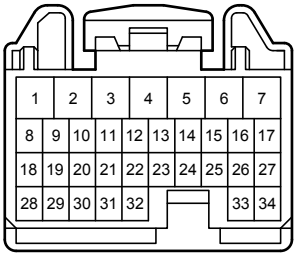

A 21
Gray

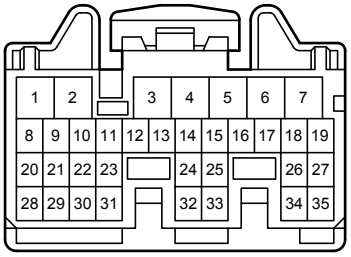

A 22
White

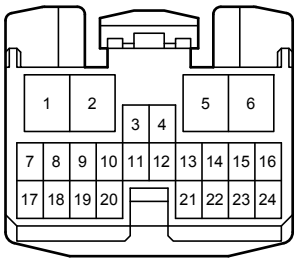

A 23
White

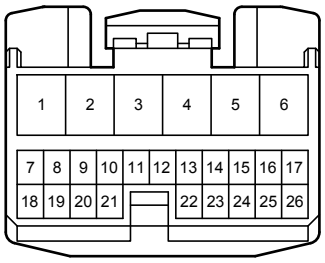

A 26
White

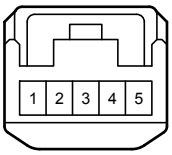

A 28
Black

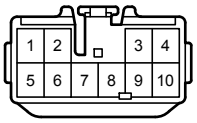

A 29
Black

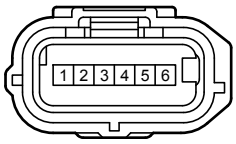

A 30
Black

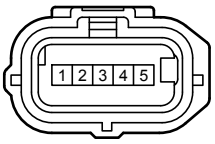

A 32
Black

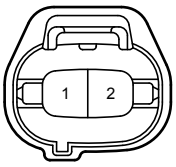

A 49
White

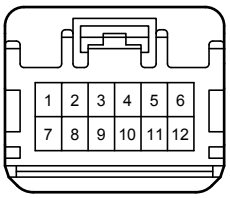

A 50
White

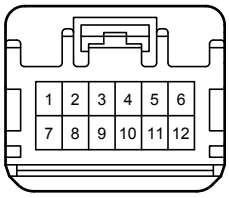

A 51
Black

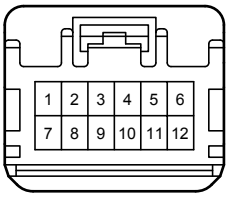

A 52
Black

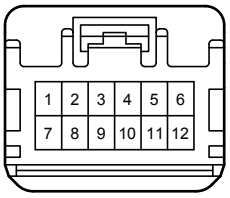

A 54
Black

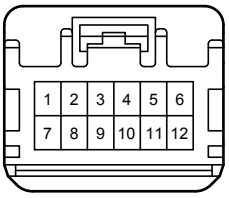

A 55
White

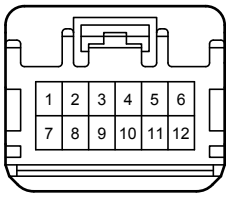

A 56
Black

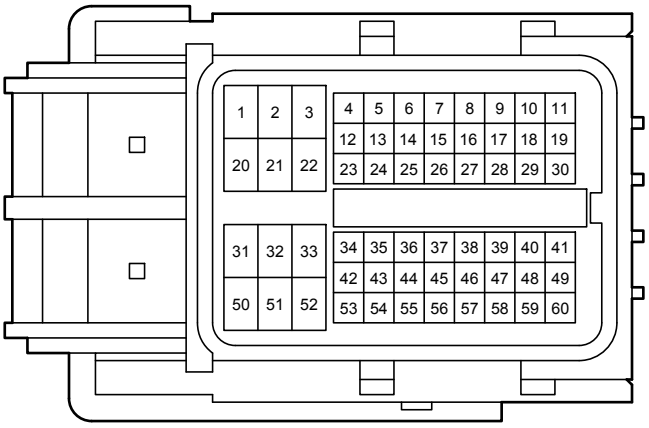

A 57
Gray

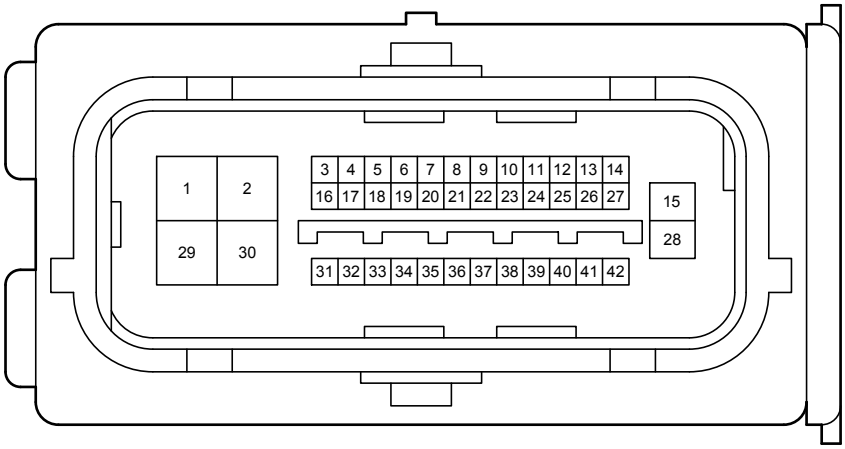

A 58
Black

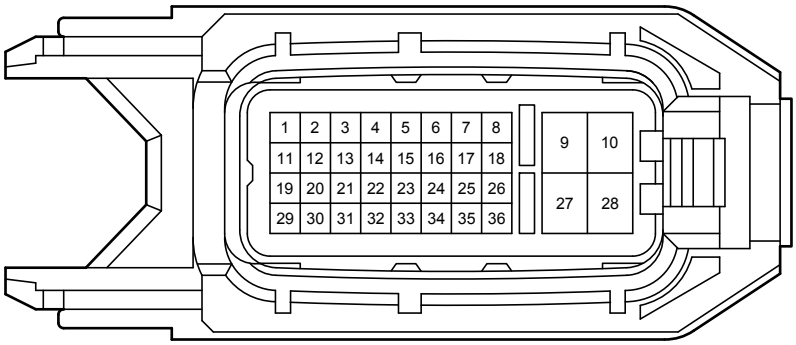

A 64
Black

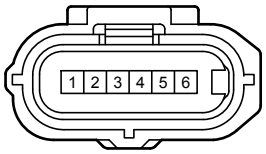

B 1

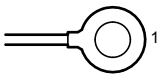

D 1
Black

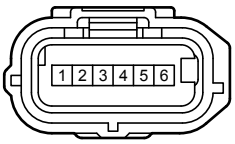

D 2
Black

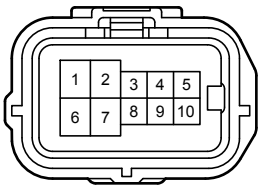

D 4
Black

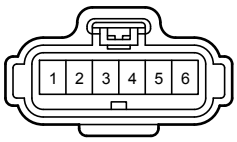

D 7
Gray

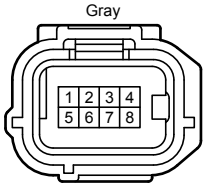

D 8
Black

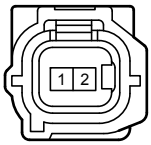

D 27
Black

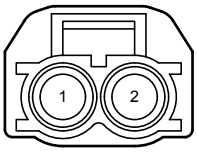

D 28
Black

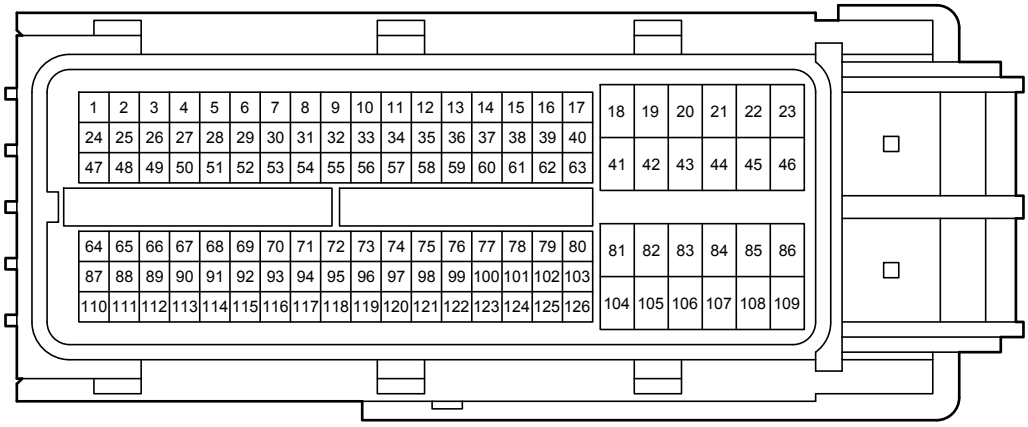

D 29
Black

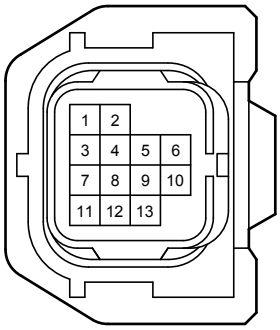

L 5
Gray

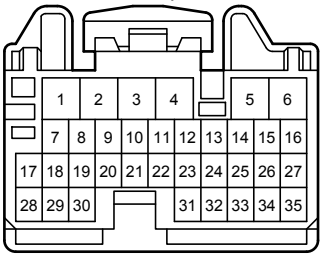

L 6
Gray

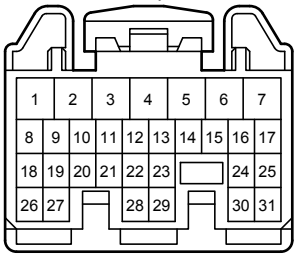

L 13
Yellow

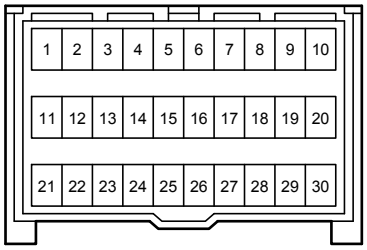

L 14
White

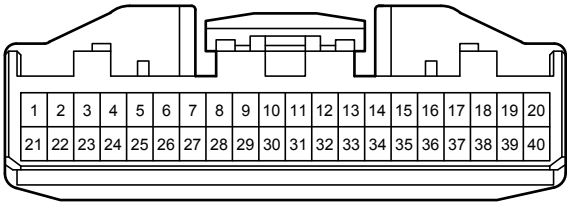

L 23
White

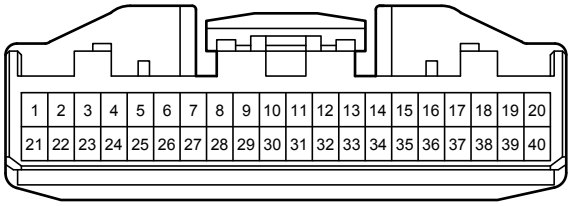

L 25
White

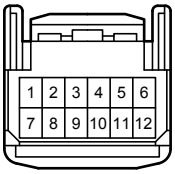

L 50
Black

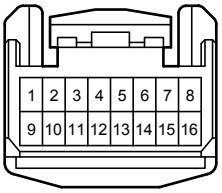

L 55
White

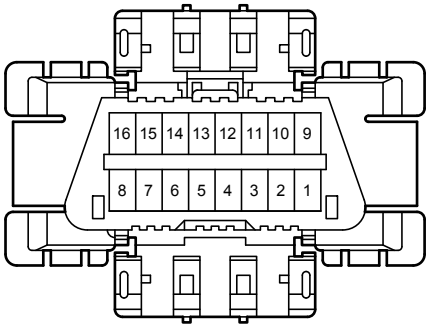

L 56
White

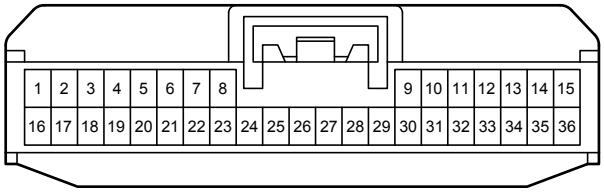

L 64
Black

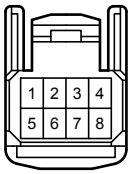

L 73
Black

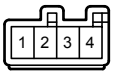

L 75
Black

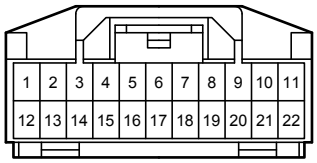

L 78
Gray

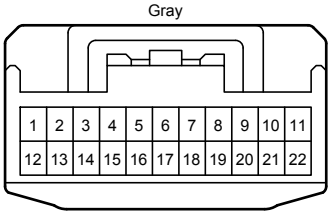

L 79
White

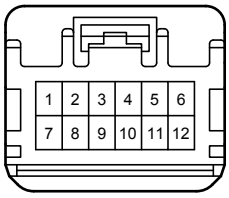

L 80
White

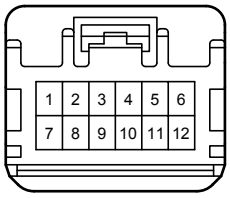

L 82
White

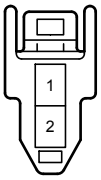

L 86
Black

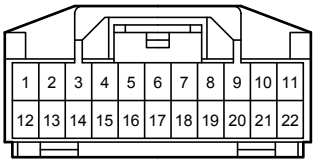

L 87
White

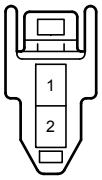

L 88
White

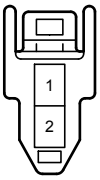

L 89
White

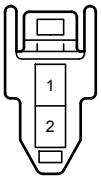

L 90
White

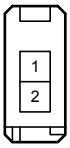

L 92
White

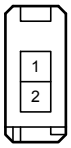

L 94
White

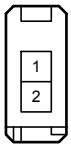

L 97
White

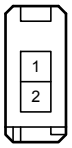

L101
White

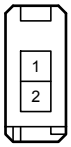

L102
White

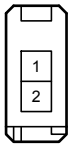

L103
White

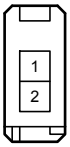

L106
Black

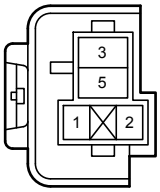

L117
Black

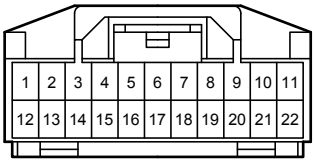

R 25
White

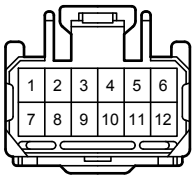

R 26
White

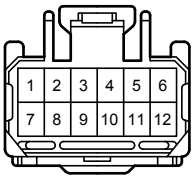

R 28
Black

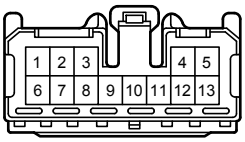

S 14
White

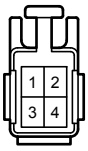

S 15
Gray

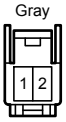

S 16
Black

S 18
White

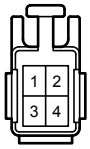

S 20
White

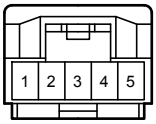

S 21
White

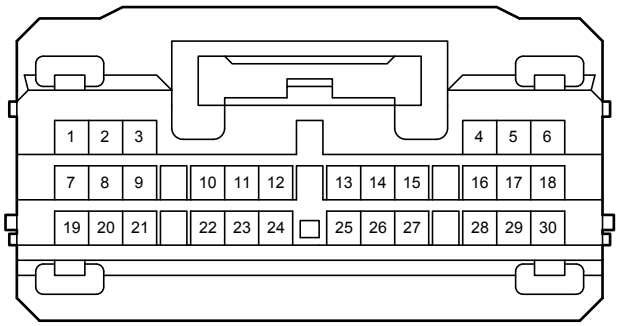

S 22
Black

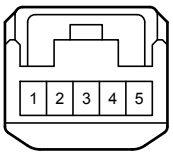

S 23
White

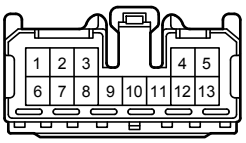

S 24
Black

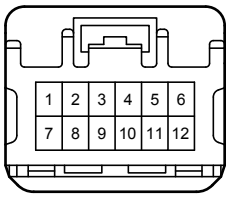

T 1
White

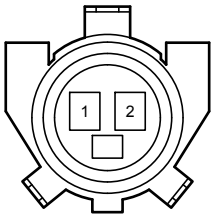

T 2

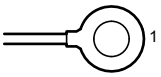

T 3

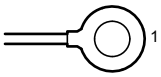

T 4

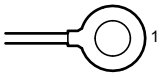

a 1
Orange

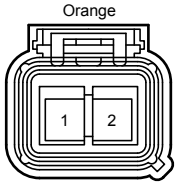

a 2
Orange

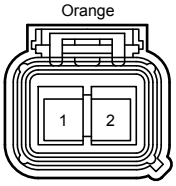

a 3
White

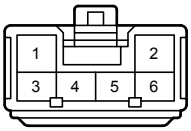

b 1
White

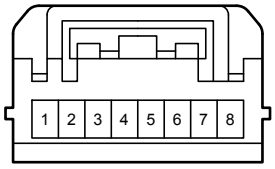

c 5
Black

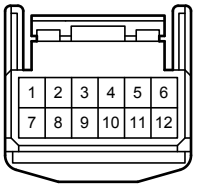

c 6
White

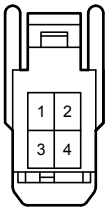

c 8
White

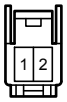

c 9
White

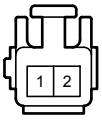

e 1
Orange

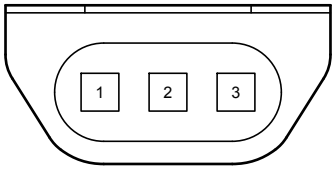

e 2
Black

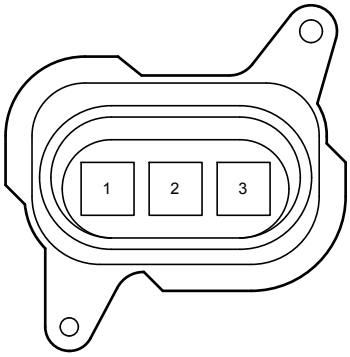

f 1
Orange

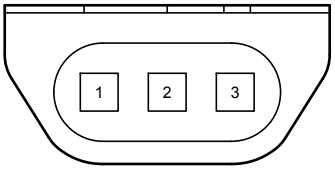

f 2
Black

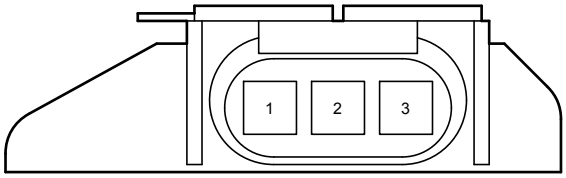

g 1
Black

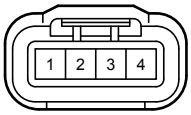

i 2
Orange

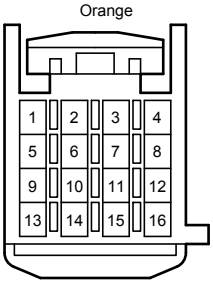

j 2
White

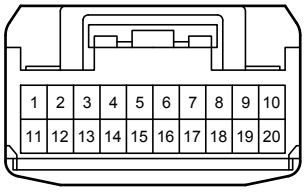

j 3
Orange

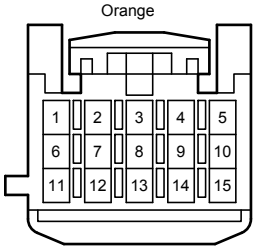

o 9
White

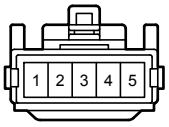

o 10
Black

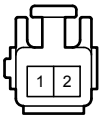

q 7

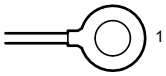

q 8
Orange

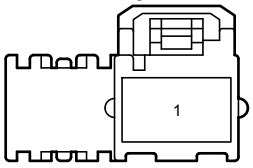

r 3

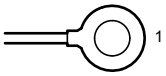

r 4

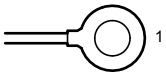

r 5

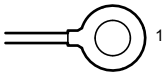

r 6

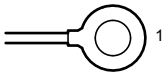

t 1
Black

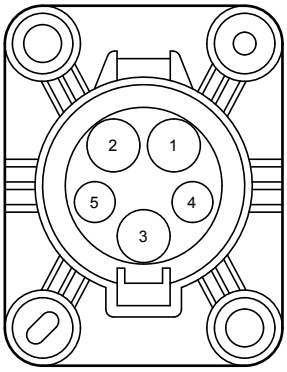

u 2
White

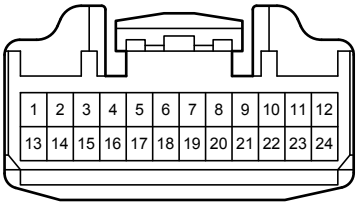

u 3
Orange

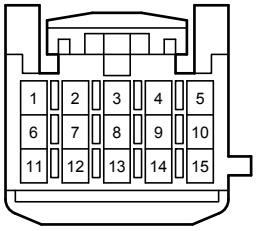

v 2
Orange

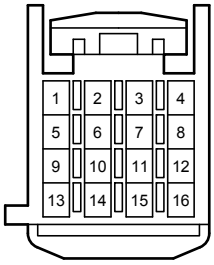

w 1

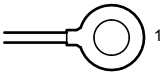

w 2
Orange

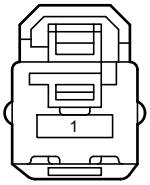

z 5
White

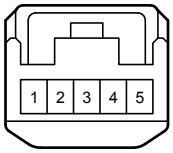

z 6
White

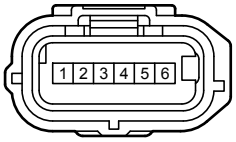

z 12
White

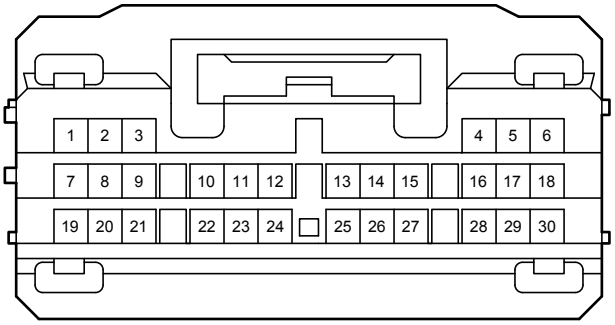

1A
White

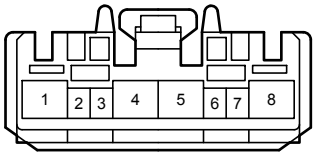

1C
White

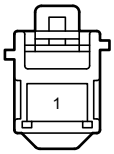

1E
White

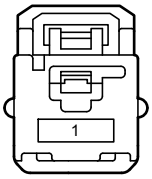

1G
White

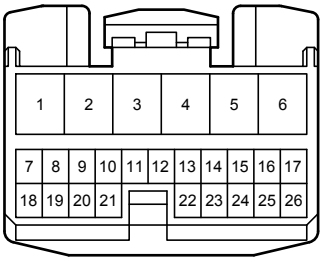

1H
White

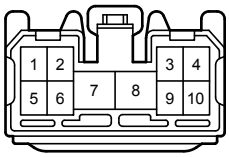

1J
White

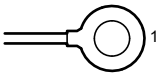

2A
White

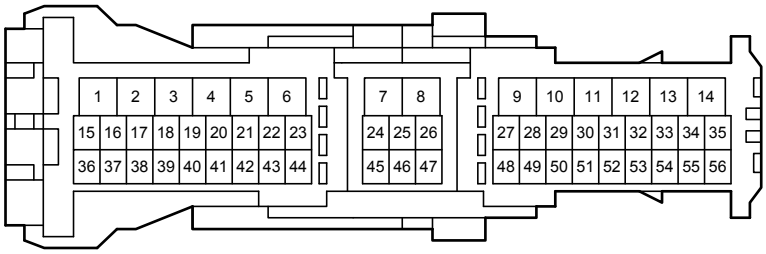

2C
White

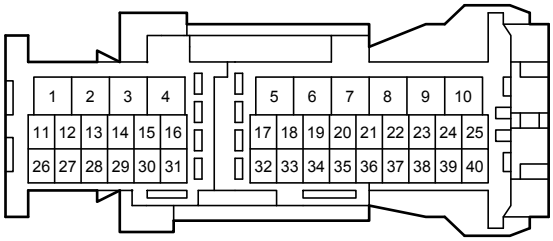

3A
White

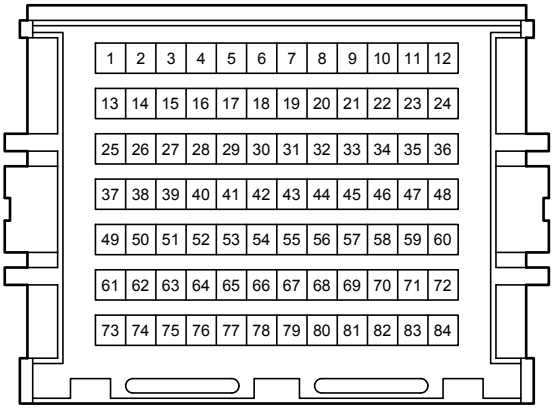

3B
White

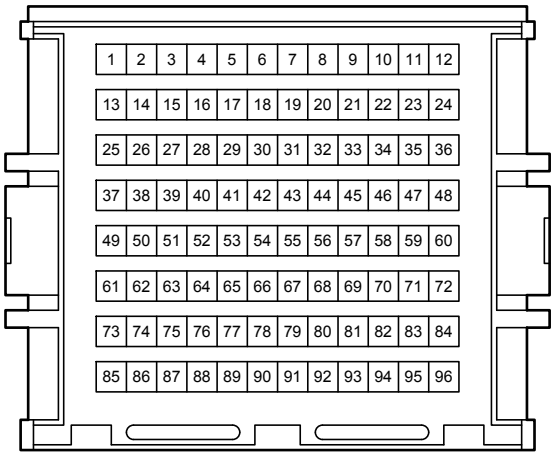

AL1
Blue

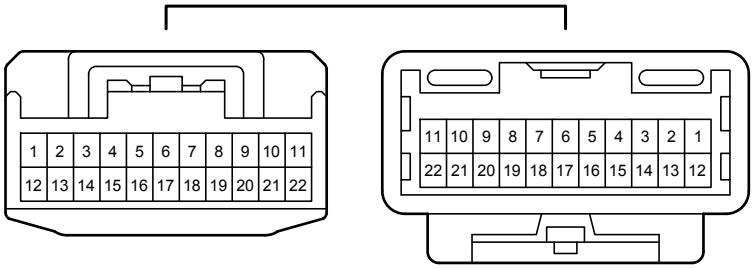

AL2
Gray

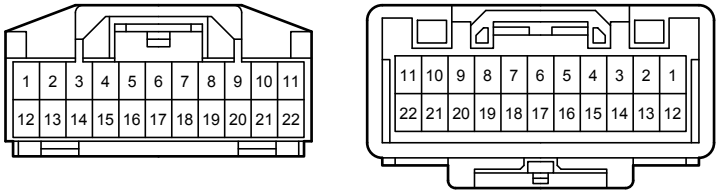

AL3
White

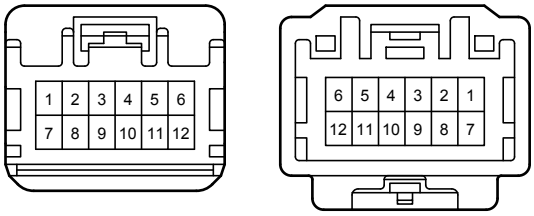

AL4
Black

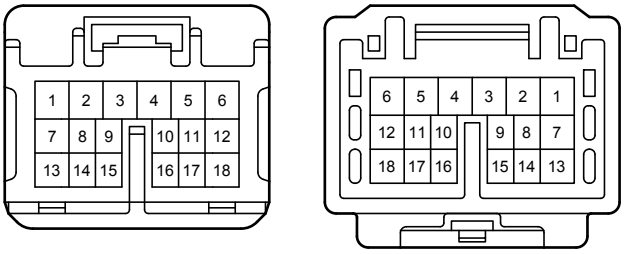

AL8
White

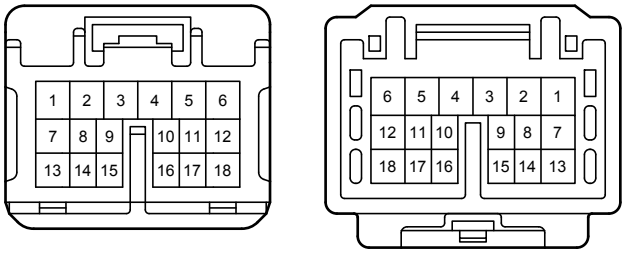

AR1
White

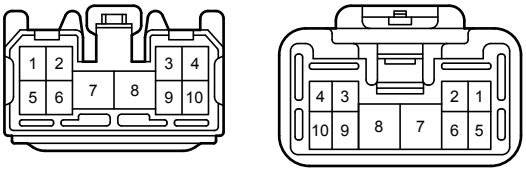

AS1
White

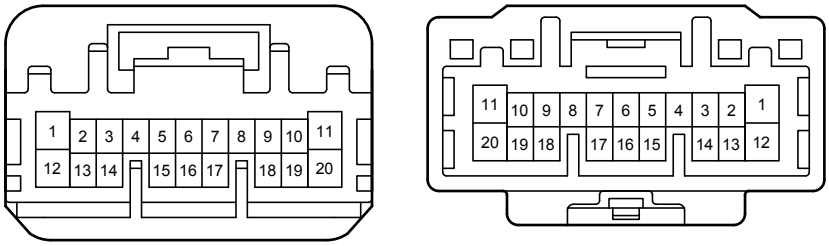

Ag1
Black

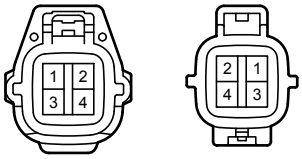

DA1
White

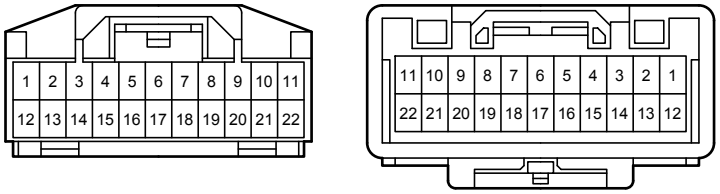

DA2
White

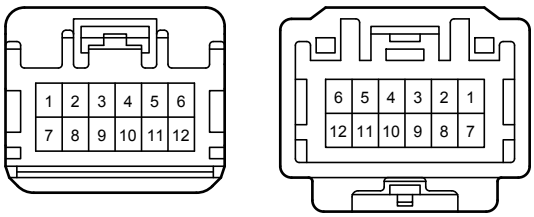

LR1
White

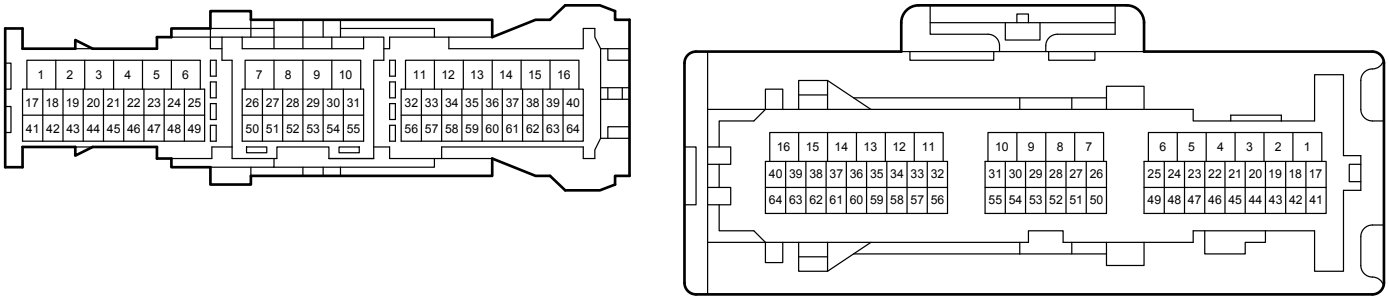

LS1
White

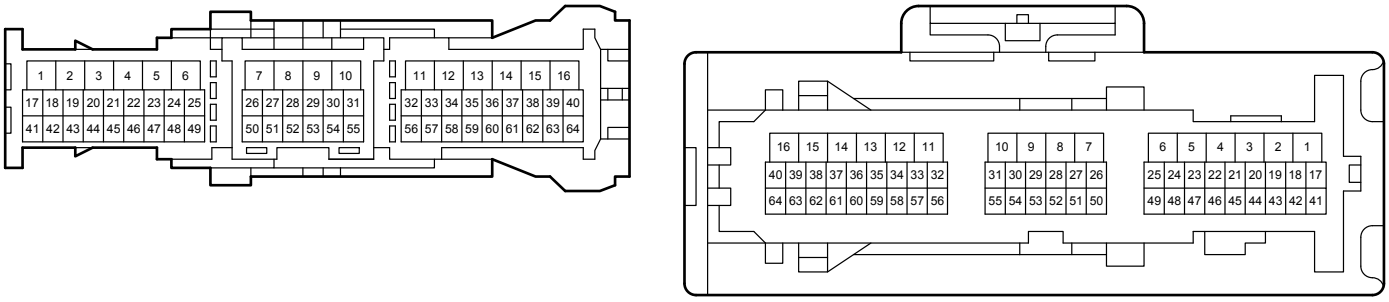

Lb1
White

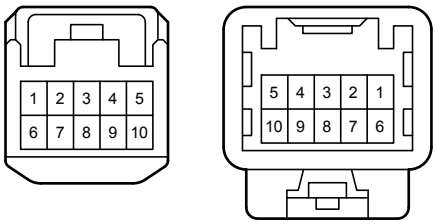

Lz1
White

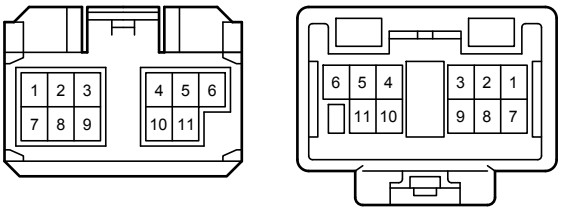

Rc2
Black

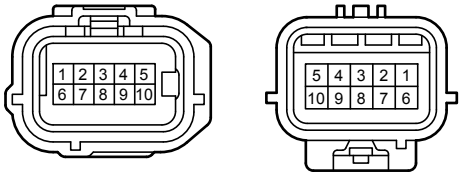

Rc2
White

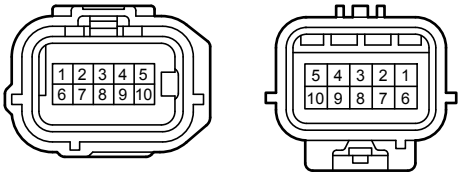

Sc1
White

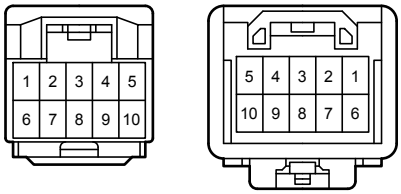

St1
White

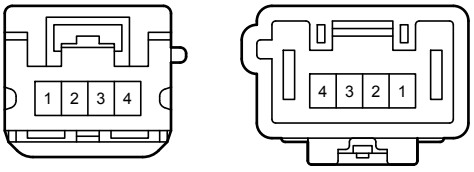

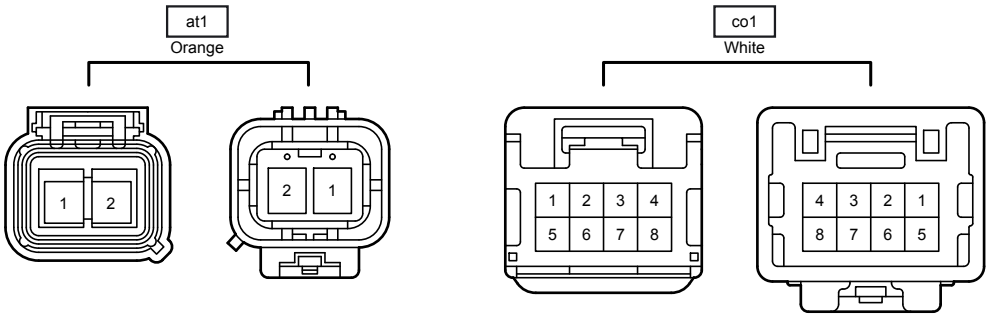
at1
Orange
1
2
2
1
co1
White
1
2
3
4
5
6
7
8
4
3
2
1
8
7
6
5