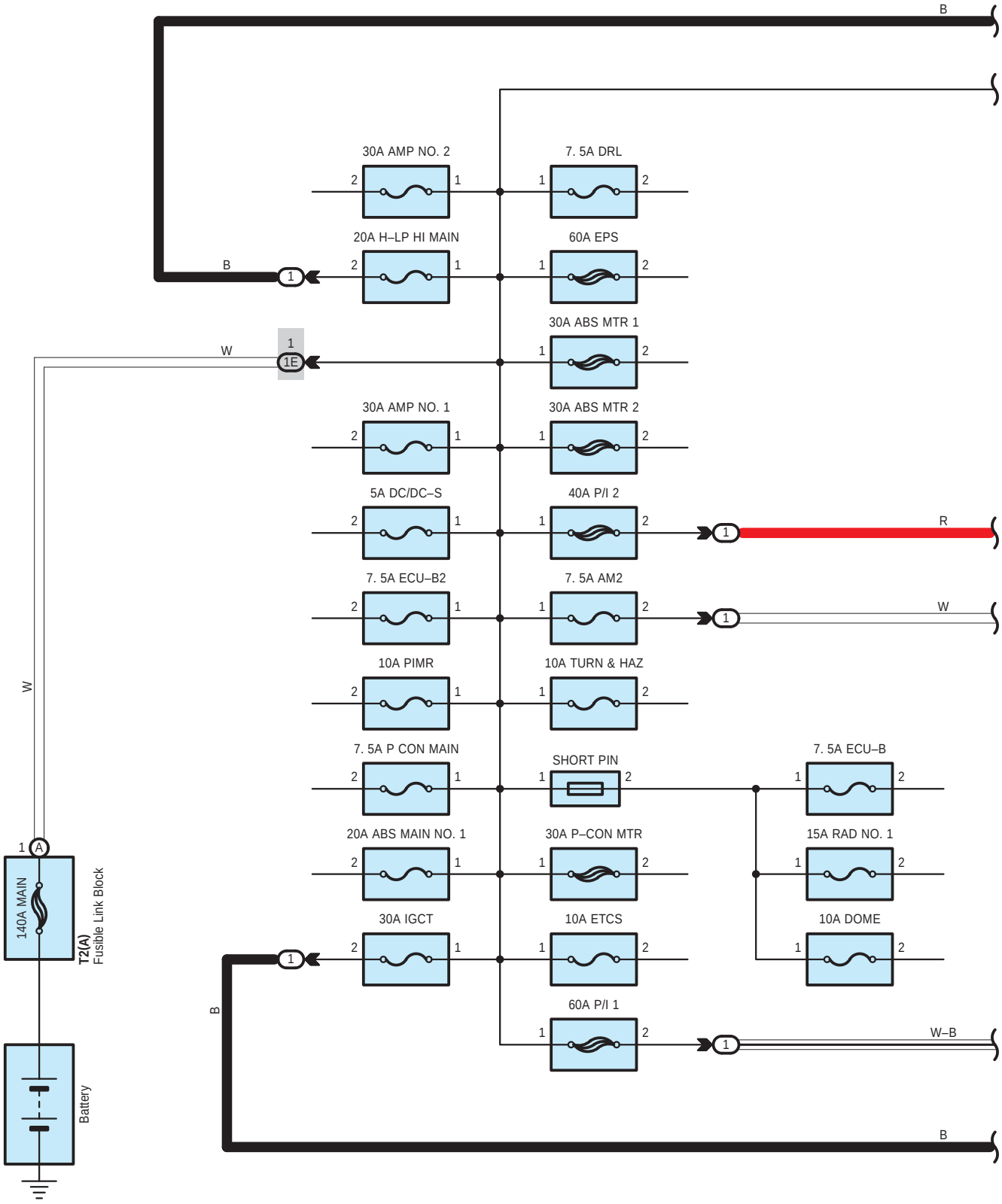
B
30A AMP NO. 2
7. 5A DRL
20A H–LP HI MAIN
60A EPS
B
1
W
1
1E
30A ABS MTR 1
30A AMP NO. 1
30A ABS MTR 2
5A DC/DC–S
40A P/I 2
R
7. 5A ECU–B2
7. 5A AM2
W
10A PIMR
10A TURN & HAZ
W
7. 5A P CON MAIN
SHORT PIN
7. 5A ECU–B
20A ABS MAIN NO. 1
30A P–CON MTR
15A RAD NO. 1
30A IGCT
10A ETCS
10A DOME
60A P/I 1
W–B
B
1
A
140A MAIN
T2(A)
Fusible Link Block
Battery
B

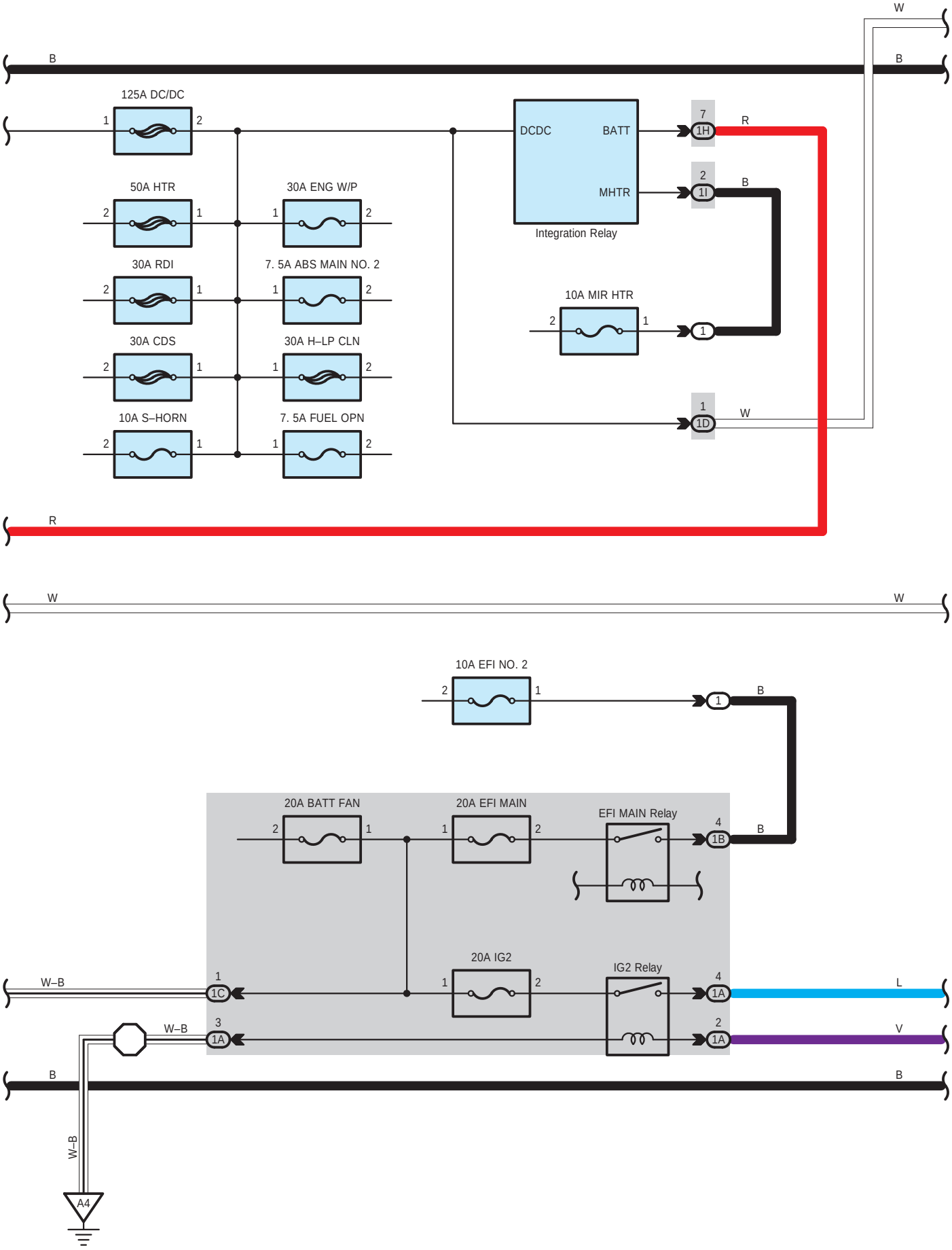
W
B
B
125A DC/DC
1
2
DCDC
BATT
MHTR
Integration Relay
7
1H
R
2
1I
B
50A HTR
30A ENG W/P
30A RDI
7. 5A ABS MAIN NO. 2
10A MIR HTR
1
30A CDS
30A H–LP CLN
1
W
10A S–HORN
7. 5A FUEL OPN
R
W
W
10A EFI NO. 2
B
20A BATT FAN
20A EFI MAIN
EFI MAIN Relay
4
1B
B
20A IG2
IG2 Relay
W–B
1C
4
1A
L
W–B
3
1A
2
1A
V
B
B
W–B
A4

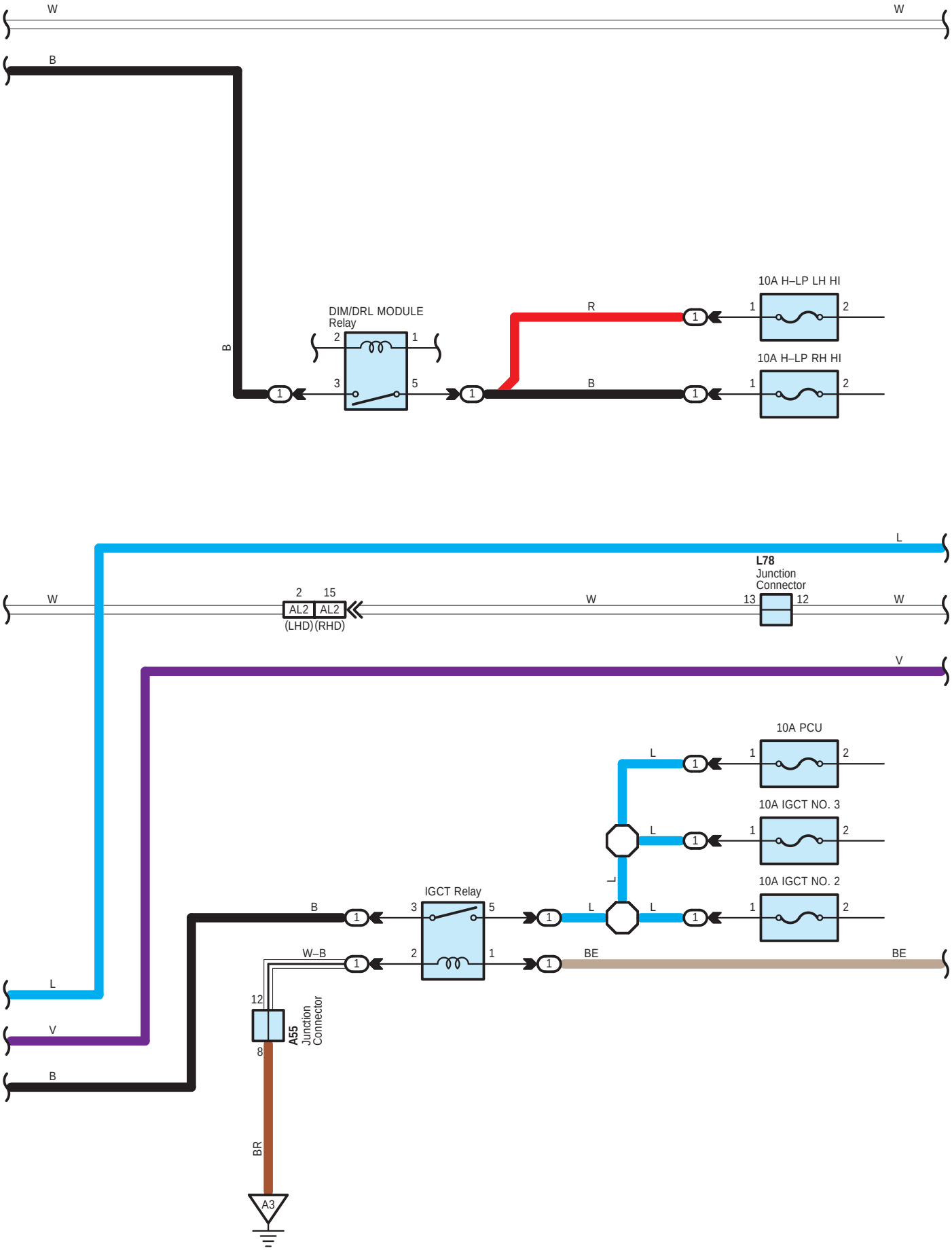
W
W
B
B
DIM/DRL MODULE
Relay
2
1
3
5
R
B
10A H–LP LH HI
10A H–LP RH HI
L
L78
Junction
Connector
13
12
W
W
W
2
15
AL2
AL2
(LHD)
(RHD)
V
10A PCU
10A IGCT NO. 3
10A IGCT NO. 2
IGCT Relay
B
W–B
BE
BE
L
V
B
12
8
A55
Junction
Connector
BR
A3

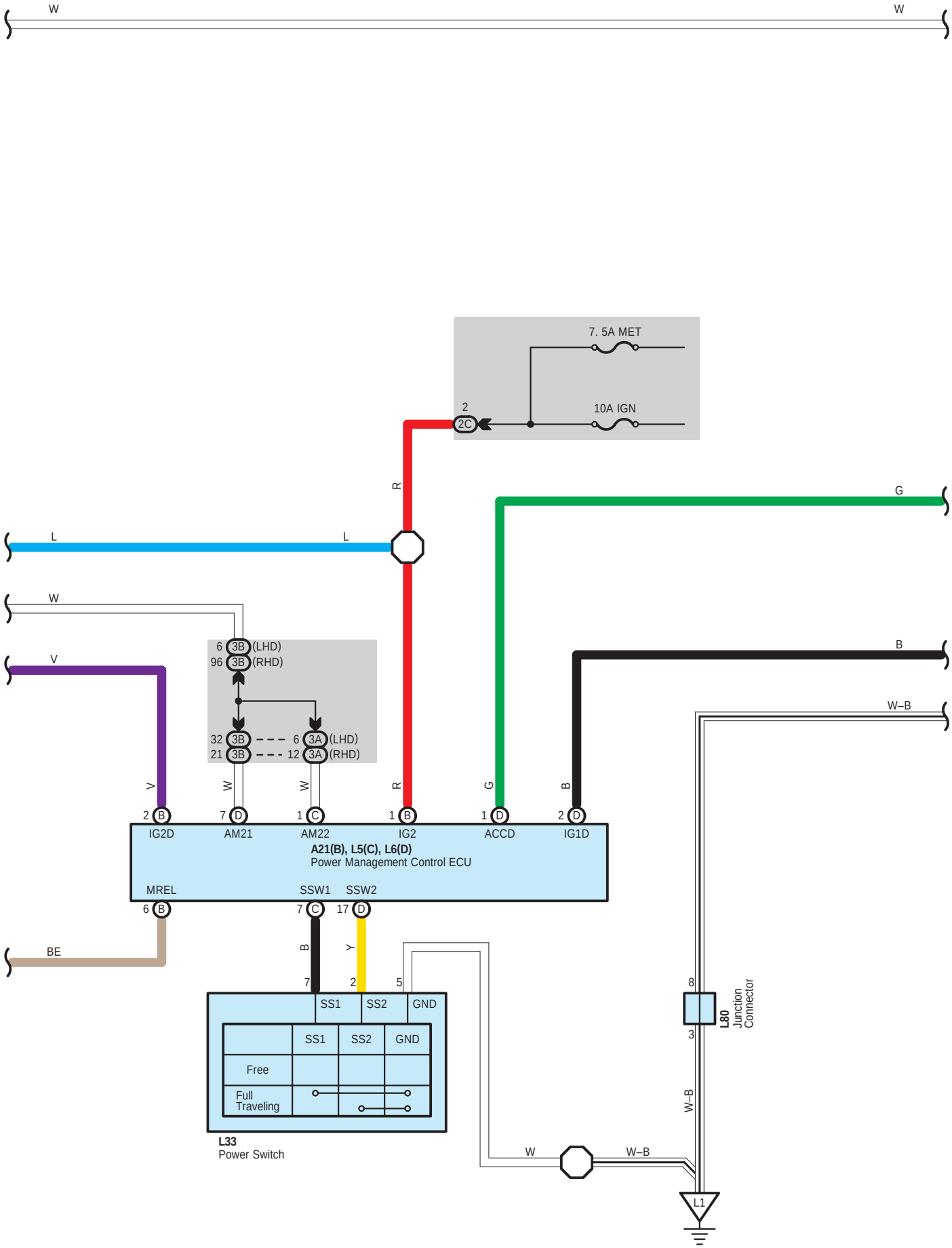
W
W
7. 5A MET
10A IGN
2
2C
R
G
L
L
W
6 3B (LHD)
96 3B (RHD)
32 3B 6 3A (LHD)
21 3B 12 3A (RHD)
V
B
W–B
V
W
W
R
G
B
2 B
7 D
1 C
1 B
1 D
2 D
IG2D
AM21
AM22
IG2
ACCD
IG1D
A21(B), L5(C), L6(D)
Power Management Control ECU
MREL
SSW1
SSW2
6 B
7 C
17 D
BE
B
Y
7
2
5
SS1
SS2
GND
SS1
SS2
GND
Free
Full Traveling
L33
Power Switch
8
3
L80
Junction Connector
W–B
W
W–B
L1

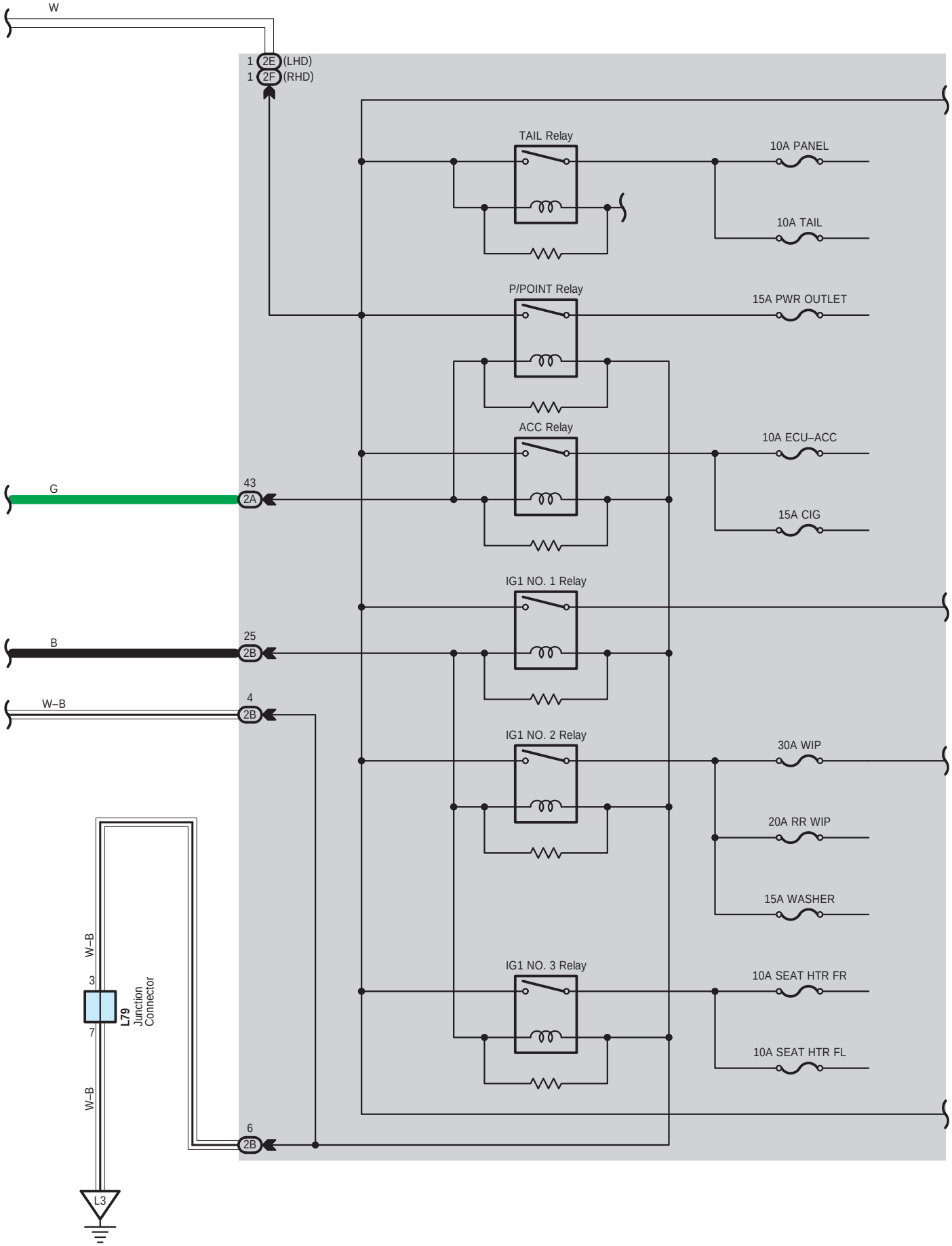
W
1 2E (LHD)
1 2F (RHD)
TAIL Relay
10A PANEL
10A TAIL
P/POINT Relay
15A PWR OUTLET
ACC Relay
10A ECU–ACC
G
43
2A
15A CIG
IG1 NO. 1 Relay
B
25
2B
W–B
4
2B
IG1 NO. 2 Relay
30A WIP
20A RR WIP
15A WASHER
W–B
3
L79
Junction
Connector
7
W–B
IG1 NO. 3 Relay
10A SEAT HTR FR
10A SEAT HTR FL
6
2B
L3

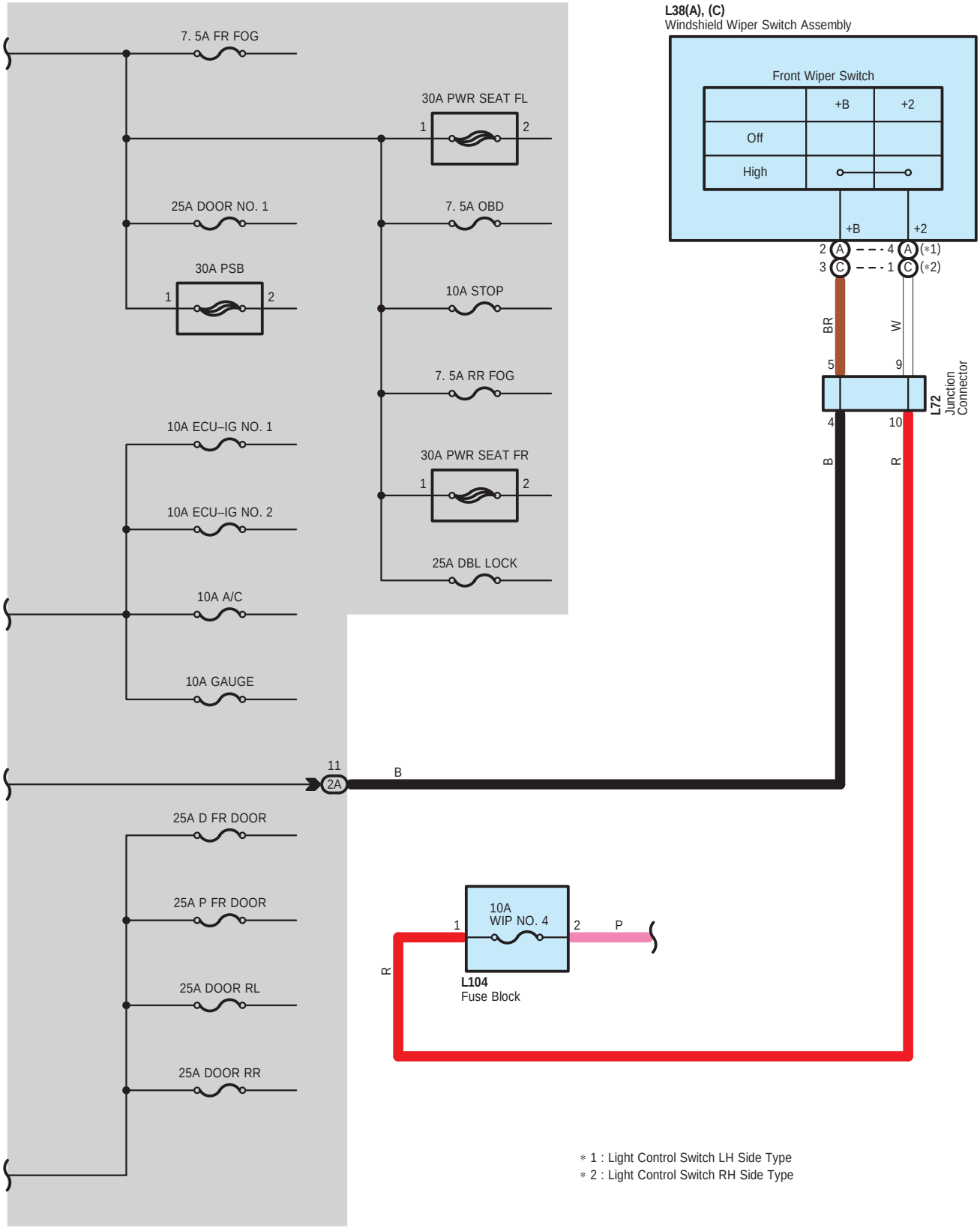

* 1 : Light Control Switch LH Side Type
* 2 : Light Control Switch RH Side Type

A 21
Gray

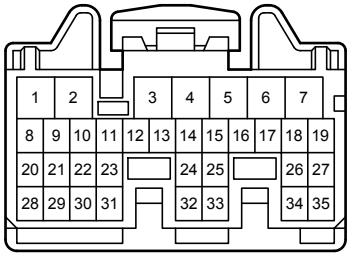

A 55
White

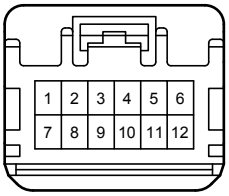

L 5
Gray

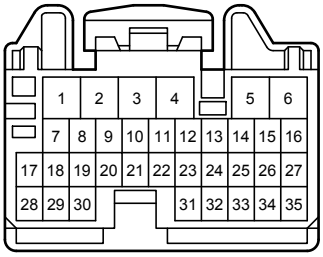

L 6
Gray

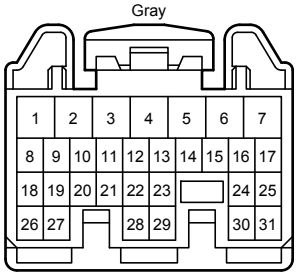

L 33
Black

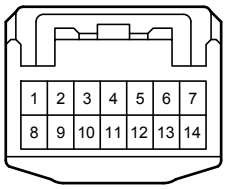

L 38
White

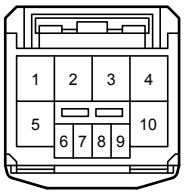

L 72
Black

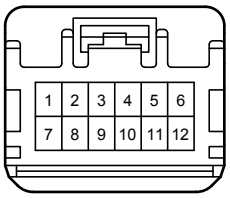

L 78
Gray

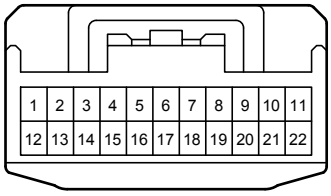

L 79
White

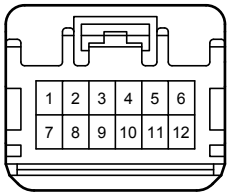

L 80
White

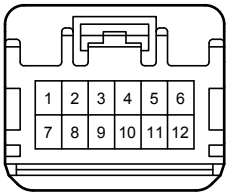

L104
White

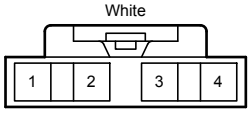

T 2

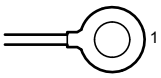

1A
White

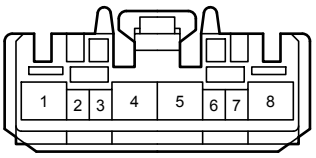

1B
White

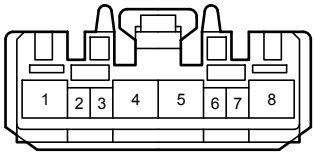

1C
White

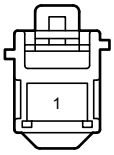

1D
Black

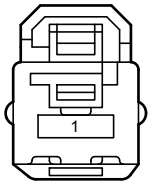

1E
White

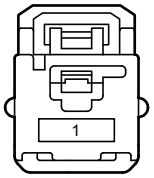

1H
White

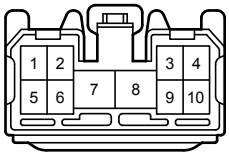

1I
White

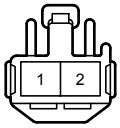

2A
White

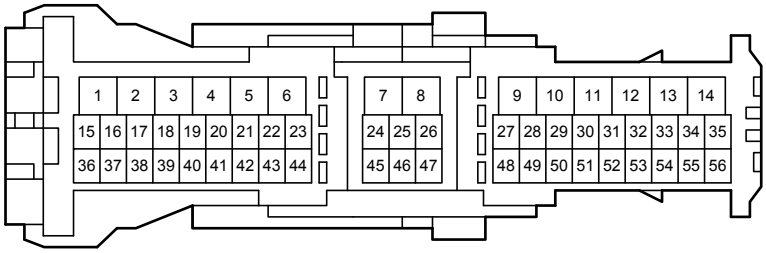

2B
White

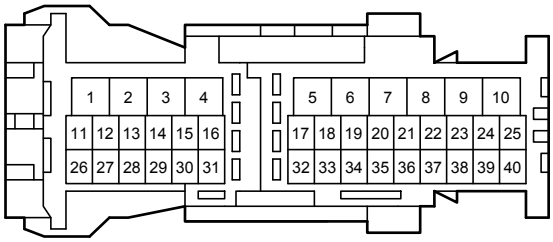

2C
White

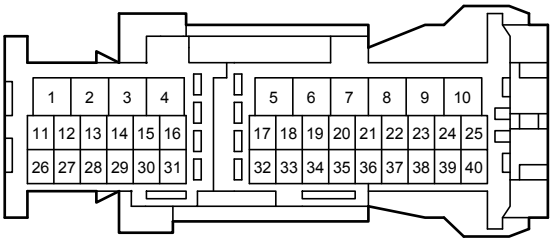

2E
White

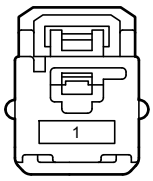

2F
White

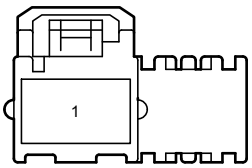

3A
White

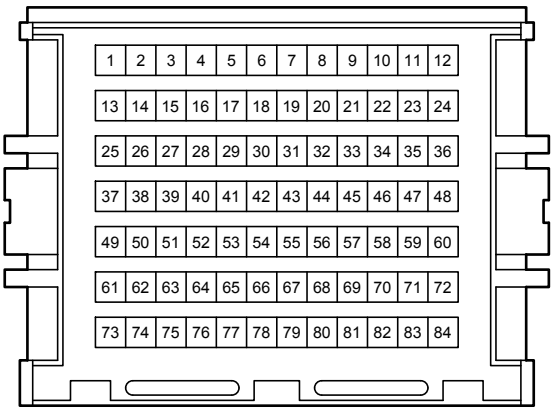

3B
White

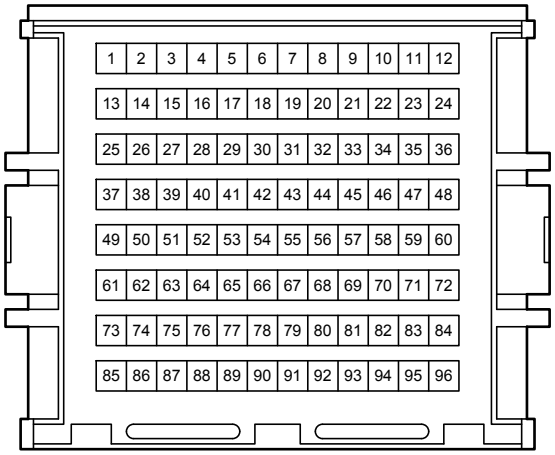

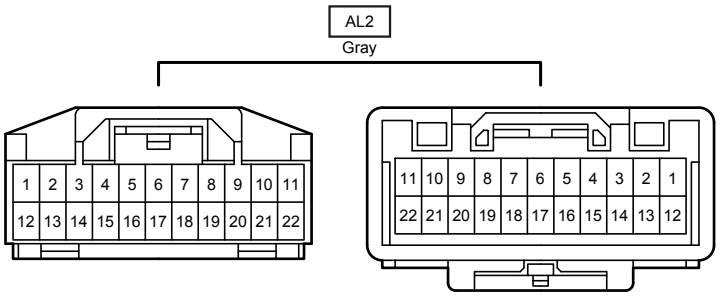
AL2
Gray
1 2 3 4 5 6 7 8 9 10 11
12 13 14 15 16 17 18 19 20 21 22
11 10 9 8 7 6 5 4 3 2 1
22 21 20 19 18 17 16 15 14 13 12