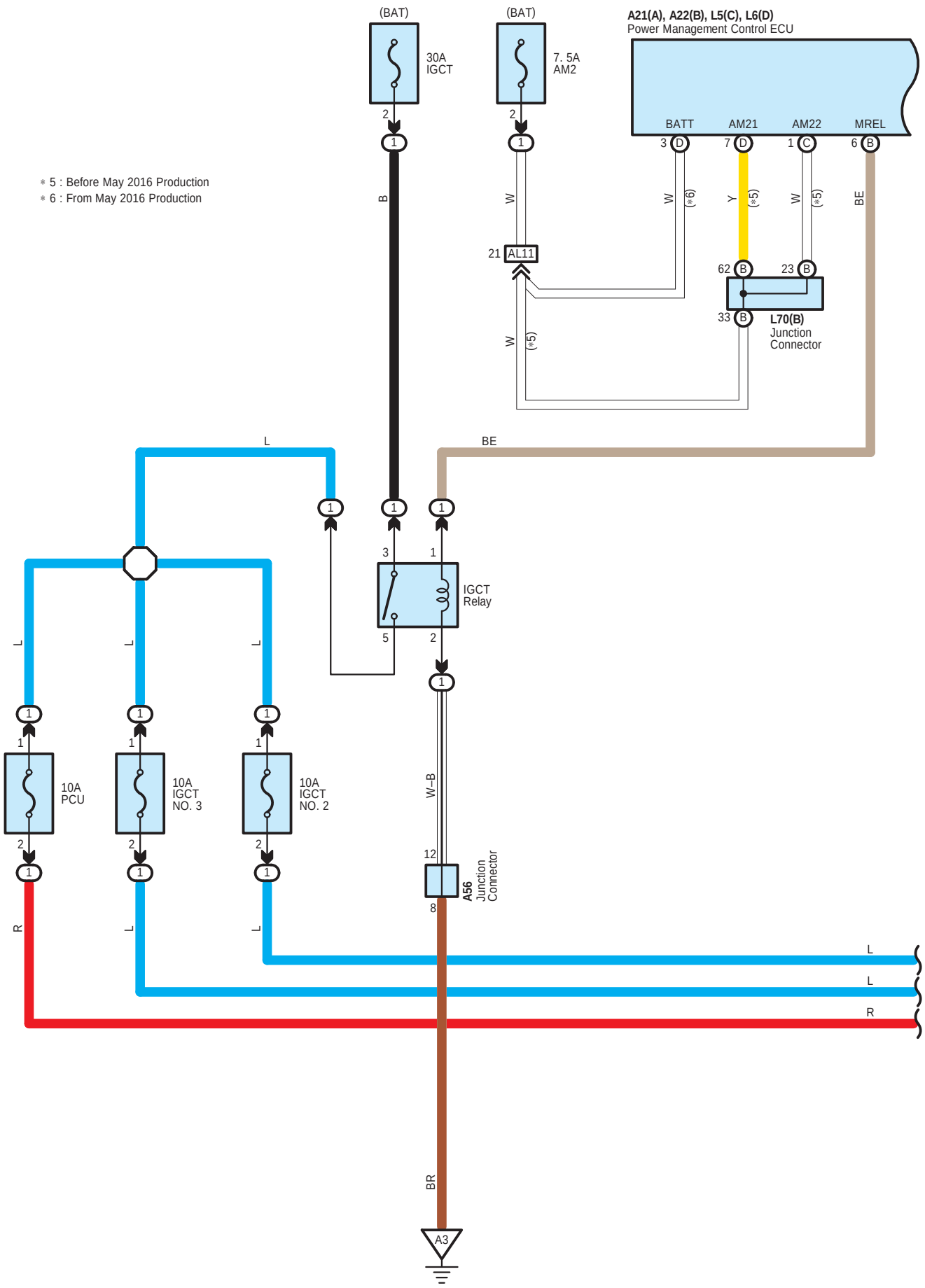
(BAT)
30A
IGCT
(BAT)
7. 5A
AM2
A21(A), A22(B), L5(C), L6(D)
Power Management Control ECU
BATT
AM21
AM22
MREL
∗ 5 : Before May 2016 Production
∗ 6 : From May 2016 Production
AL11
L70(B)
Junction
Connector
IGCT
Relay
10A
PCU
10A
IGCT
NO. 3
10A
IGCT
NO. 2
A56
Junction
Connector
A3

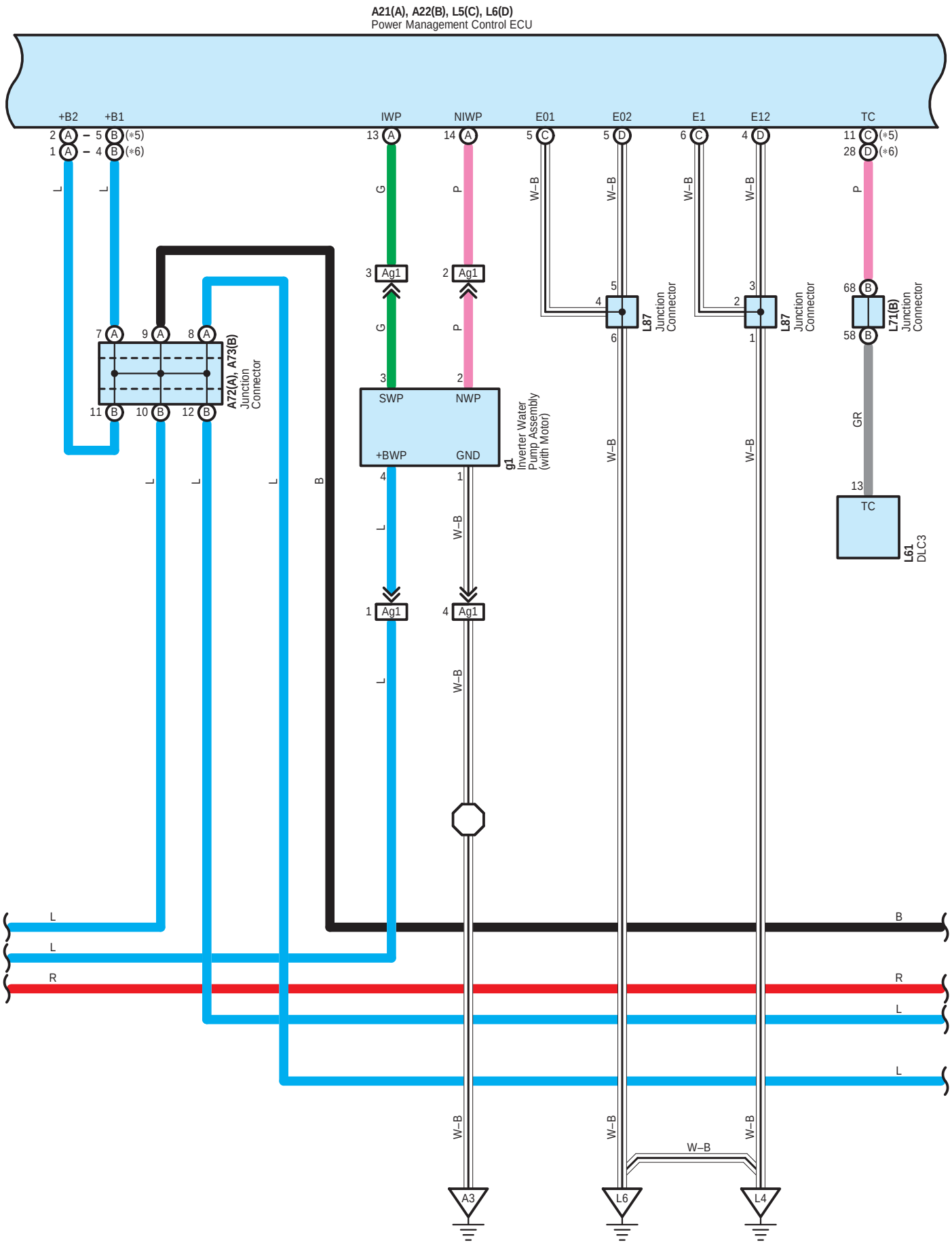
A21(A), A22(B), L5(C), L6(D)
Power Management Control ECU
+B2
+B1
IWP
NIWP
E01
E02
E1
E12
TC
2 A – 5 B (*5)
1 A – 4 B (*6)
13 A
14 A
5 C
5 D
6 C
4 D
11 C (*5)
28 D (*6)
L
G
P
W–B
3 Ag1
2 Ag1
7 A
9 A
8 A
11 B
10 B
12 B
A72(A), A73(B)
Junction Connector
L87
Junction Connector
68 B
58 B
L71(B)
Junction Connector
SWP
NWP
+BWP
GND
g1
Inverter Water Pump Assembly (with Motor)
GR
13
TC
L61
DLC3
B
1 Ag1
4 Ag1
R
A3
L6
L4

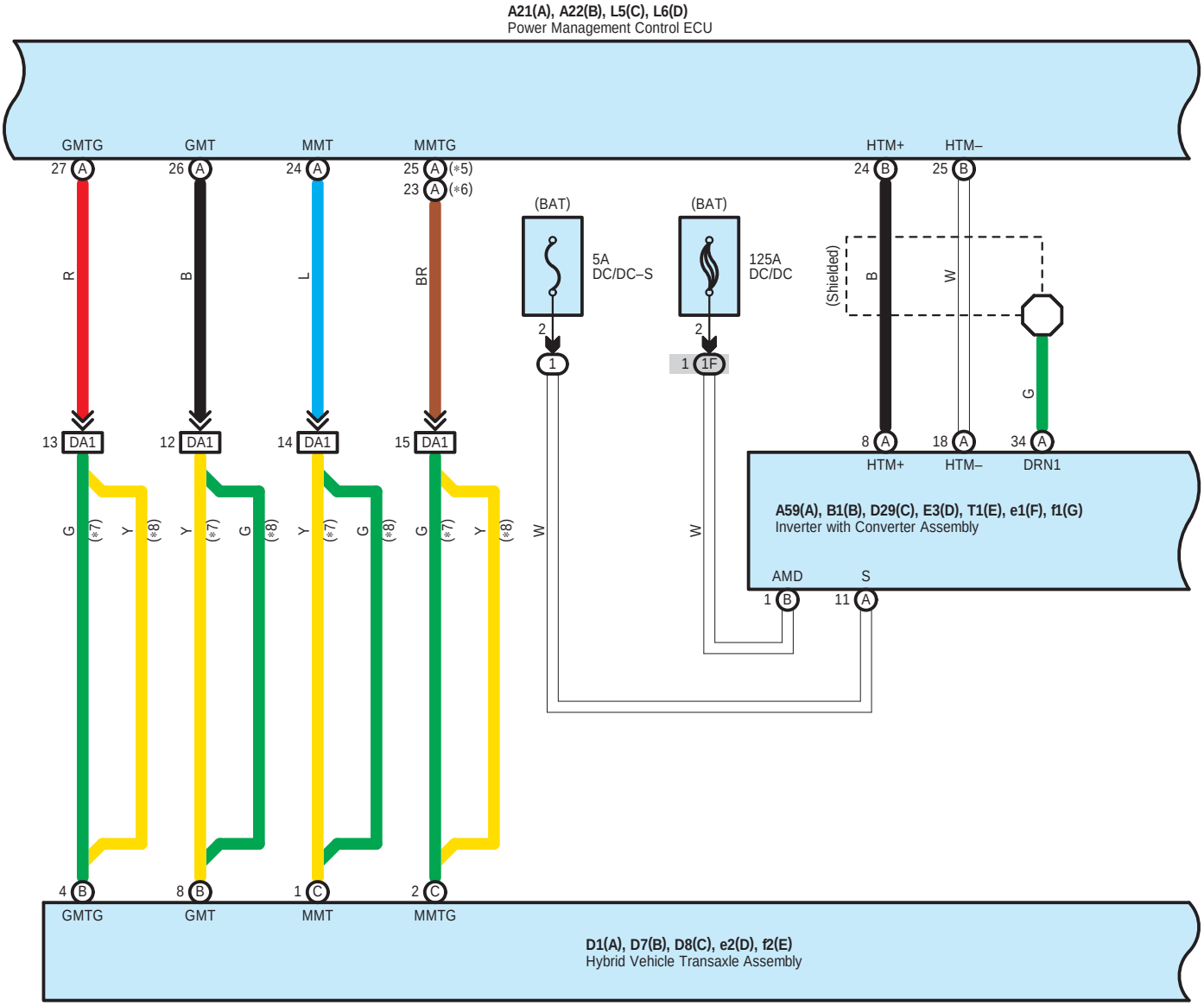

∗ 5 : Before May 2016 Production
∗ 6 : From May 2016 Production
∗ 7 : Before Dec. 2017 Production
∗ 8 : From Dec. 2017 Production

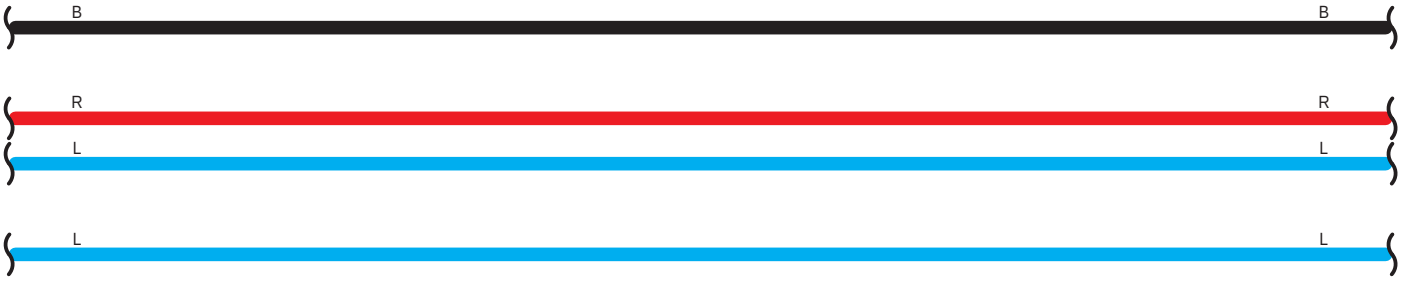

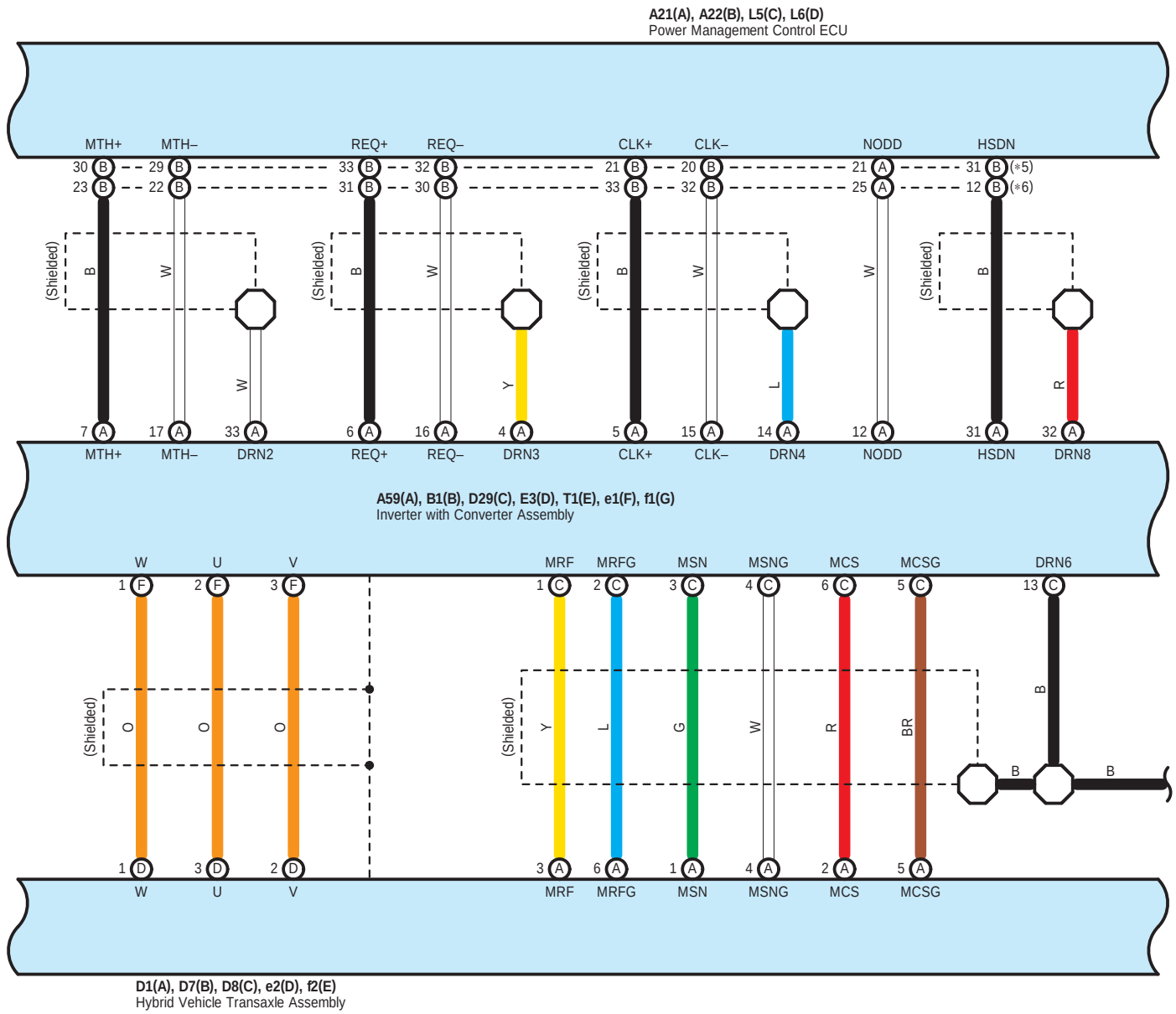
A21(A), A22(B), L5(C), L6(D)
Power Management Control ECU
MTH+
MTH–
REQ+
REQ–
CLK+
CLK–
NODD
HSDN
30 B
23 B
29 B
22 B
33 B
31 B
32 B
30 B
21 B
33 B
20 B
32 B
21 A
25 A
31 B (*5)
12 B (*6)
(Shielded)
B
W
W
Y
L
R
7 A
17 A
33 A
6 A
16 A
4 A
5 A
15 A
14 A
12 A
31 A
32 A
MTH+
MTH–
DRN2
REQ+
REQ–
DRN3
CLK+
CLK–
DRN4
NODD
HSDN
DRN8
A59(A), B1(B), D29(C), E3(D), T1(E), e1(F), f1(G)
Inverter with Converter Assembly
W
U
V
MRF
MRFG
MSN
MSNG
MCS
MCSG
DRN6
1 F
2 F
3 F
1 C
2 C
3 C
4 C
6 C
5 C
13 C
(Shielded)
O
O
O
Y
L
G
W
R
BR
B
B
B
1 D
3 D
2 D
3 A
6 A
1 A
4 A
2 A
5 A
W
U
V
MRF
MRFG
MSN
MSNG
MCS
MCSG
D1(A), D7(B), D8(C), e2(D), f2(E)
Hybrid Vehicle Transaxle Assembly

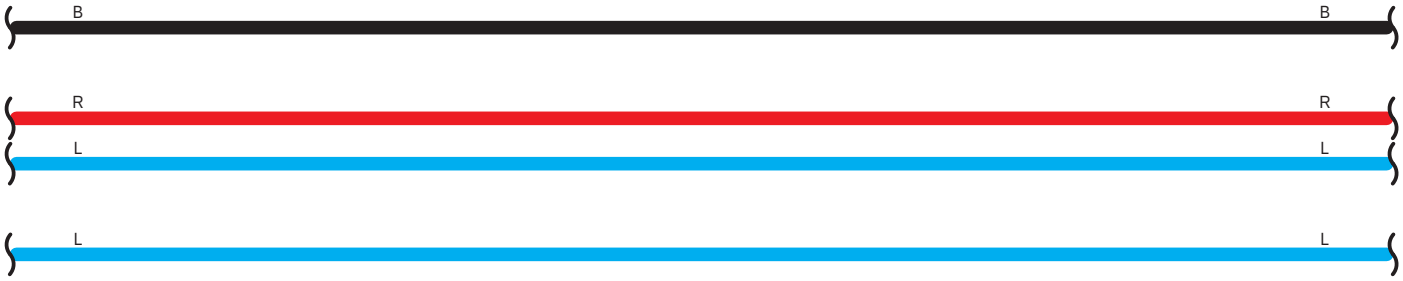
B
B
R
R
L
L
L
L

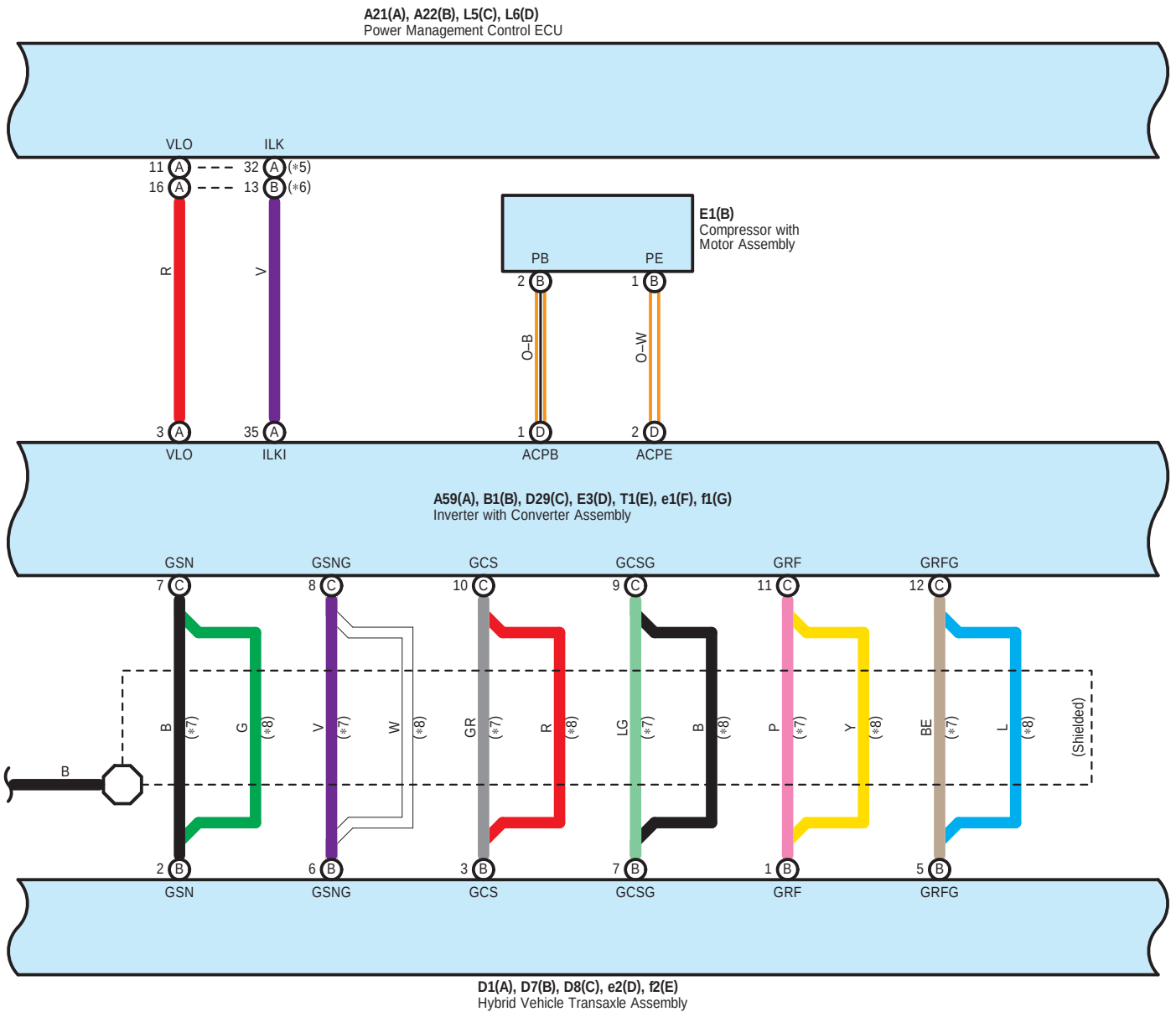
A21(A), A22(B), L5(C), L6(D)
Power Management Control ECU
VLO
ILK
11 A
32 A (*5)
16 A
13 B (*6)
R
V
E1(B)
Compressor with
Motor Assembly
PB
PE
2 B
1 B
O–B
O–W
3 A
35 A
1 D
2 D
VLO
ILKI
ACPB
ACPE
A59(A), B1(B), D29(C), E3(D), T1(E), e1(F), f1(G)
Inverter with Converter Assembly
GSN
GSNG
GCS
GCSG
GRF
GRFG
7 C
8 C
10 C
9 C
11 C
12 C
B (*7)
G (*8)
V (*7)
W (*8)
GR (*7)
R (*8)
LG (*7)
B (*8)
P (*7)
Y (*8)
BE (*7)
L (*8)
(Shielded)
B
2 B
6 B
3 B
7 B
1 B
5 B
GSN
GSNG
GCS
GCSG
GRF
GRFG
D1(A), D7(B), D8(C), e2(D), f2(E)
Hybrid Vehicle Transaxle Assembly

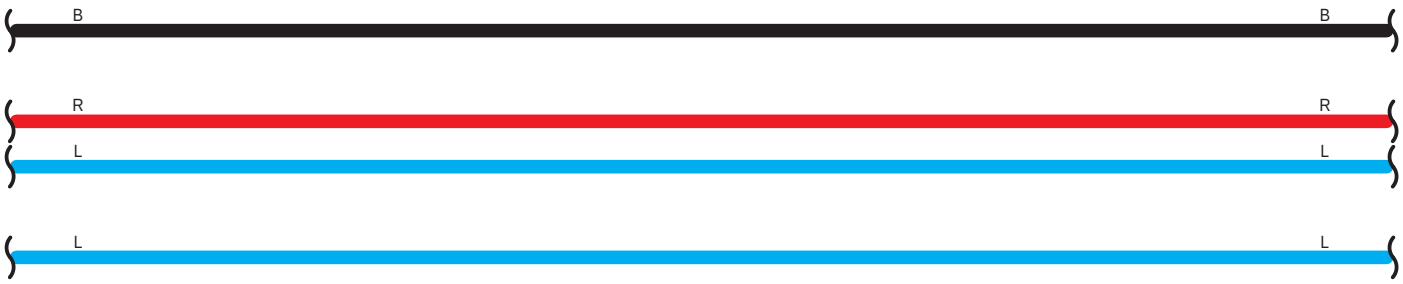
B
B
R
R
L
L
L
L

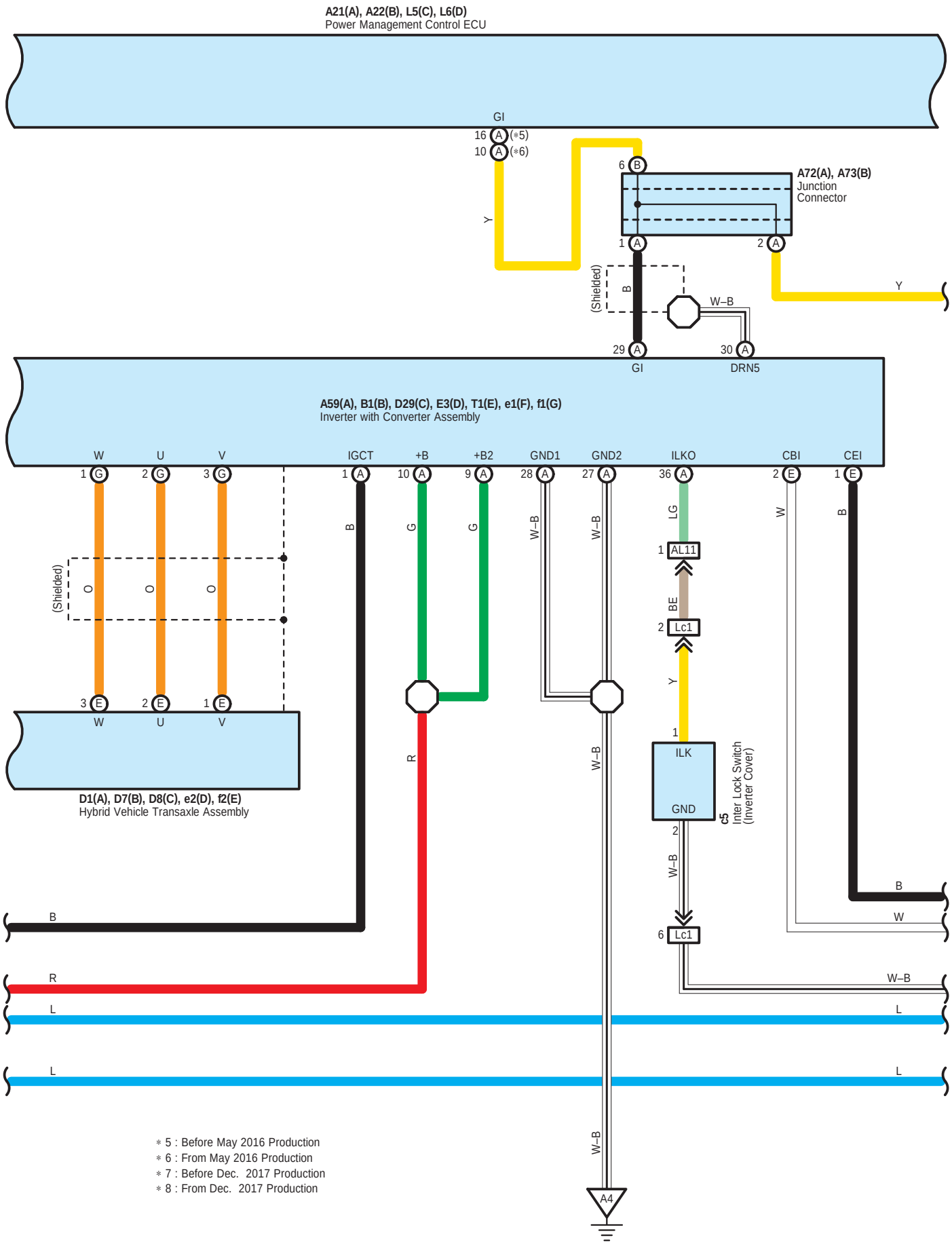
A21(A), A22(B), L5(C), L6(D)
Power Management Control ECU
GI
16 A (*5)
10 A (*6)
Y
6 B
A72(A), A73(B)
Junction Connector
1 A
2 A
Y
(Shielded)
B
W–B
29 A
GI
30 A
DRN5
A59(A), B1(B), D29(C), E3(D), T1(E), e1(F), f1(G)
Inverter with Converter Assembly
W
U
V
IGCT
+B
+B2
GND1
GND2
ILKO
CBI
CEI
1 G
2 G
3 G
1 A
10 A
9 A
28 A
27 A
36 A
2 E
1 E
B
G
G
W–B
W–B
LG
W
B
(Shielded)
O
O
O
1 AL11
BE
2 Lc1
Y
3 E
2 E
1 E
W
U
V
R
W–B
1
ILK
GND
C5
Inter Lock Switch (Inverter Cover)
2
W–B
6 Lc1
B
W
D1(A), D7(B), D8(C), e2(D), f2(E)
Hybrid Vehicle Transaxle Assembly
B
R
W–B
L
L
L
L
W–B
A4
* 5 : Before May 2016 Production
* 6 : From May 2016 Production
* 7 : Before Dec. 2017 Production
* 8 : From Dec. 2017 Production

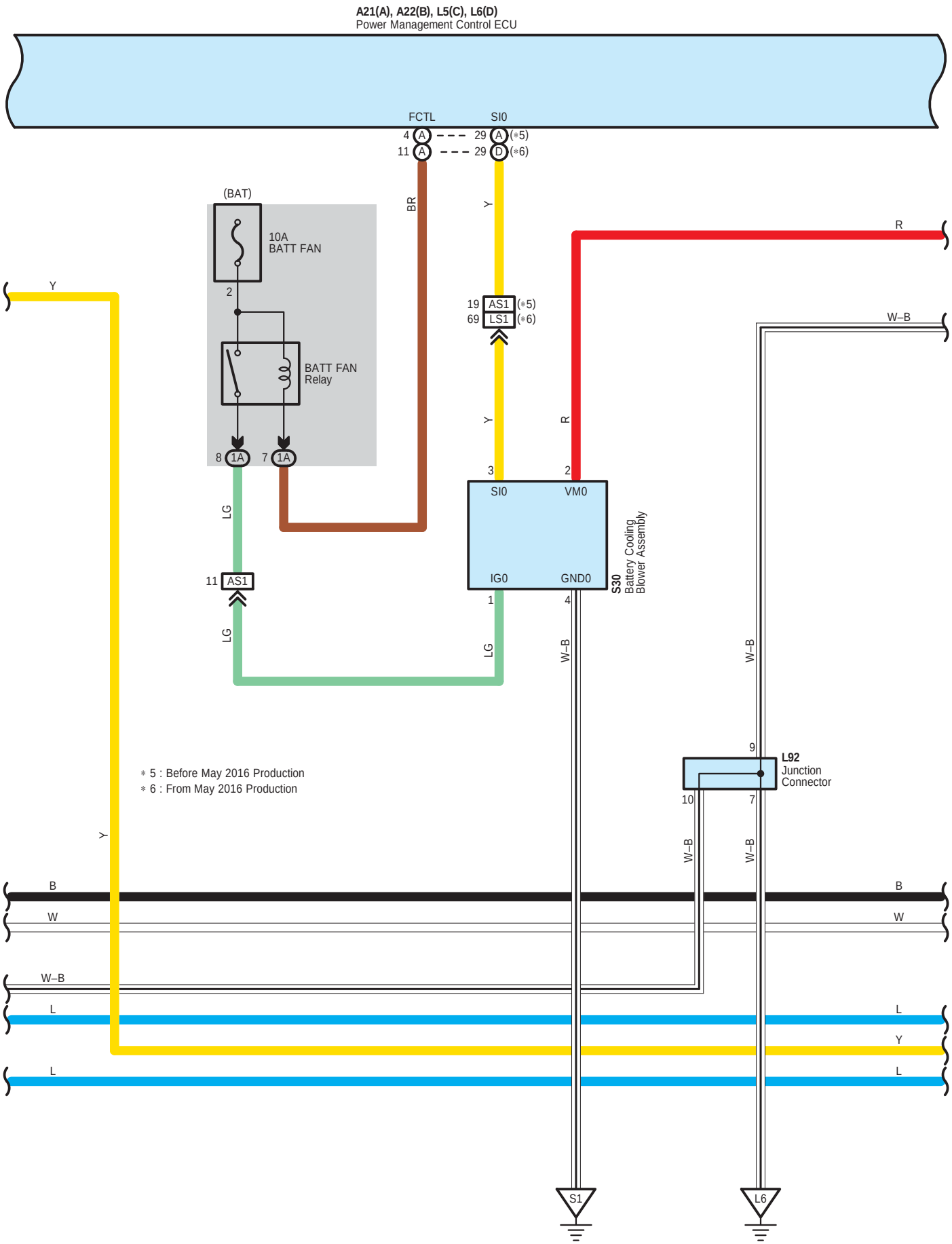
A21(A), A22(B), L5(C), L6(D)
Power Management Control ECU
FCTL
SI0
4 A
11 A
29 A (*5)
29 D (*6)
(BAT)
10A
BATT FAN
2
BATT FAN
Relay
8 1A
7 1A
BR
Y
R
19 AS1 (*5)
69 LS1 (*6)
W–B
3
2
SI0
VM0
IG0
GND0
S30
Battery Cooling
Blower Assembly
1
4
LG
11 AS1
9
L92
Junction
Connector
10
7
* 5 : Before May 2016 Production
* 6 : From May 2016 Production
B
W
L
S1
L6

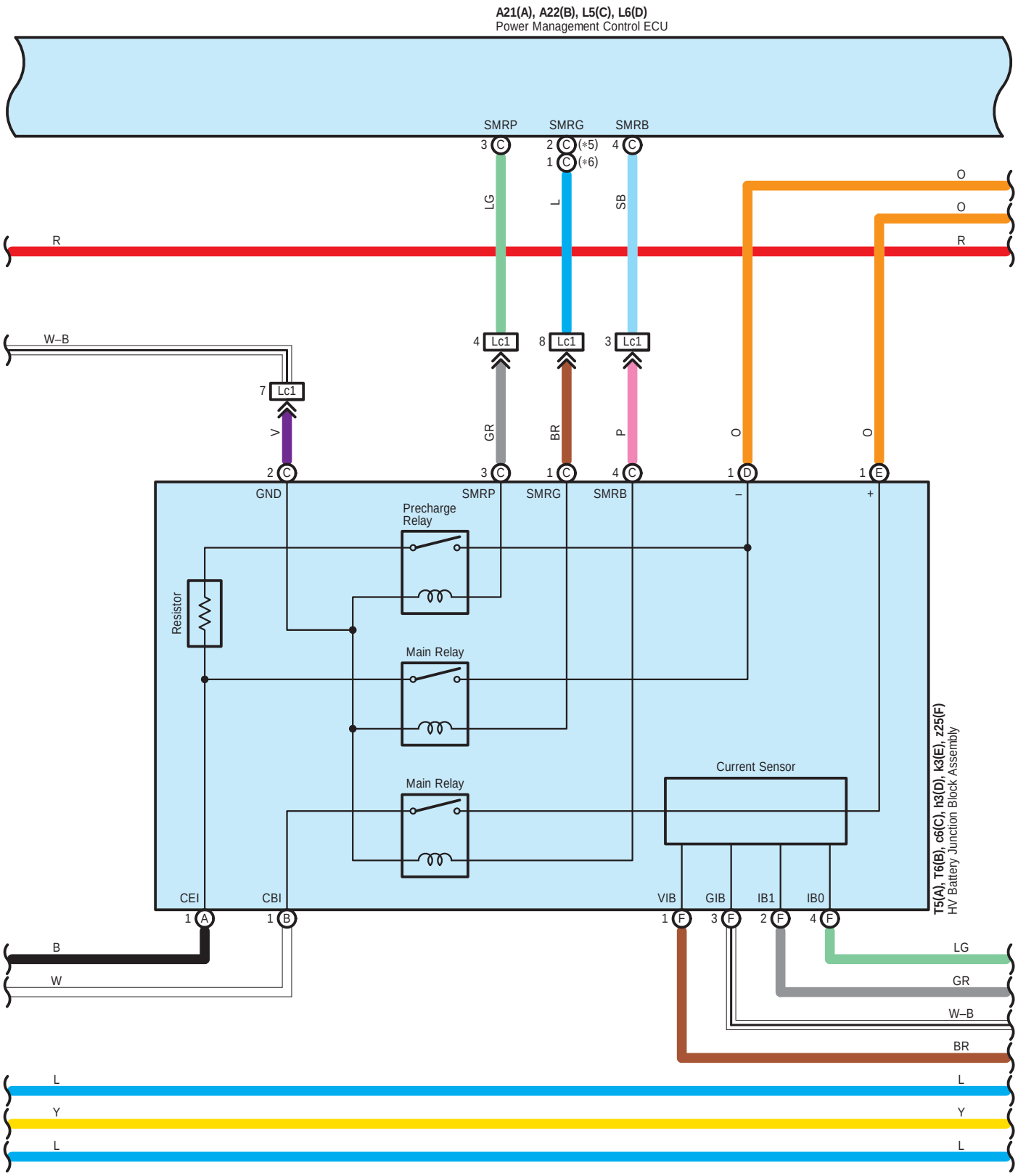
A21(A), A22(B), L5(C), L6(D)
Power Management Control ECU
SMRP
SMRG
SMRB
3 C
2 C (*5)
1 C (*6)
4 C
LG
L
SB
O
O
R
R
W–B
4 Lc1
8 Lc1
3 Lc1
7 Lc1
V
GR
BR
P
O
O
2 C
3 C
1 C
4 C
1 D
1 E
GND
SMRP
SMRG
SMRB
–
+
Precharge Relay
Resistor
Main Relay
Main Relay
Current Sensor
CEI
CBI
VIB
GIB
IB1
IB0
1 A
1 B
1 F
3 F
2 F
4 F
T5(A), T6(B), c6(C), h3(D), k3(E), z25(F)
HV Battery Junction Block Assembly
B
W
LG
GR
W–B
BR
L
L
Y
Y
L
L

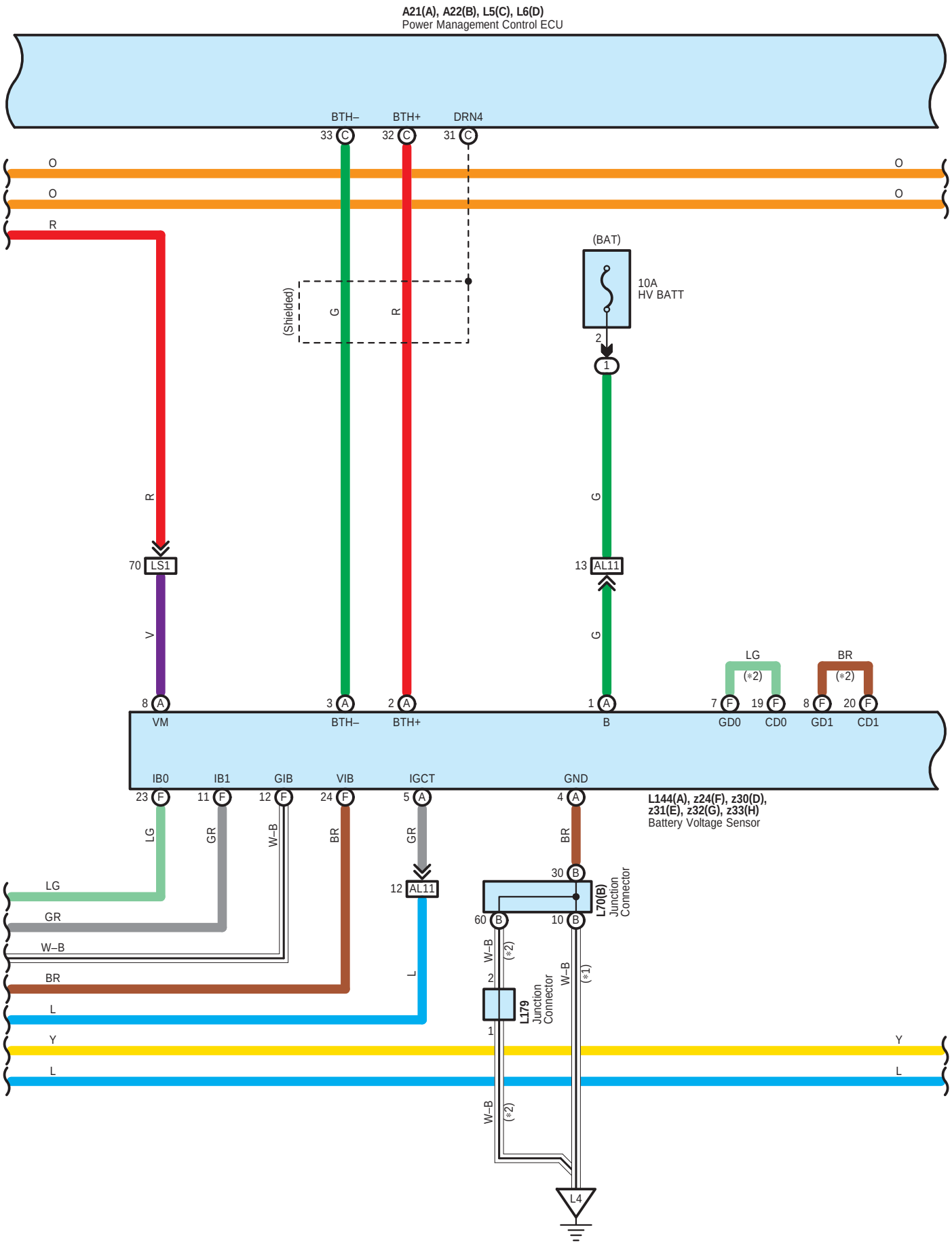
A21(A), A22(B), L5(C), L6(D)
Power Management Control ECU
BTH–
BTH+
DRN4
33 C
32 C
31 C
O
O
O
O
R
(Shielded)
G
R
(BAT)
10A
HV BATT
2
1
R
G
70 LS1
13 AL11
V
G
LG
(*2)
BR
(*2)
8 A
VM
3 A
BTH–
2 A
BTH+
1 A
B
7 F
19 F
GD0
CD0
8 F
20 F
GD1
CD1
IB0
IB1
GIB
VIB
IGCT
GND
23 F
11 F
12 F
24 F
5 A
4 A
L144(A), z24(F), z30(D),
z31(E), z32(G), z33(H)
Battery Voltage Sensor
LG
GR
W–B
BR
GR
BR
LG
GR
W–B
BR
L
12 AL11
L
30 B
L70(B)
Junction
Connector
60 B
10 B
W–B
(*2)
2
L179
Junction
Connector
W–B
(*1)
1
Y
L
Y
L
W–B
(*2)
L4

＊1 : Before Nov. 2014 Production
＊2 : From Nov. 2014 Production

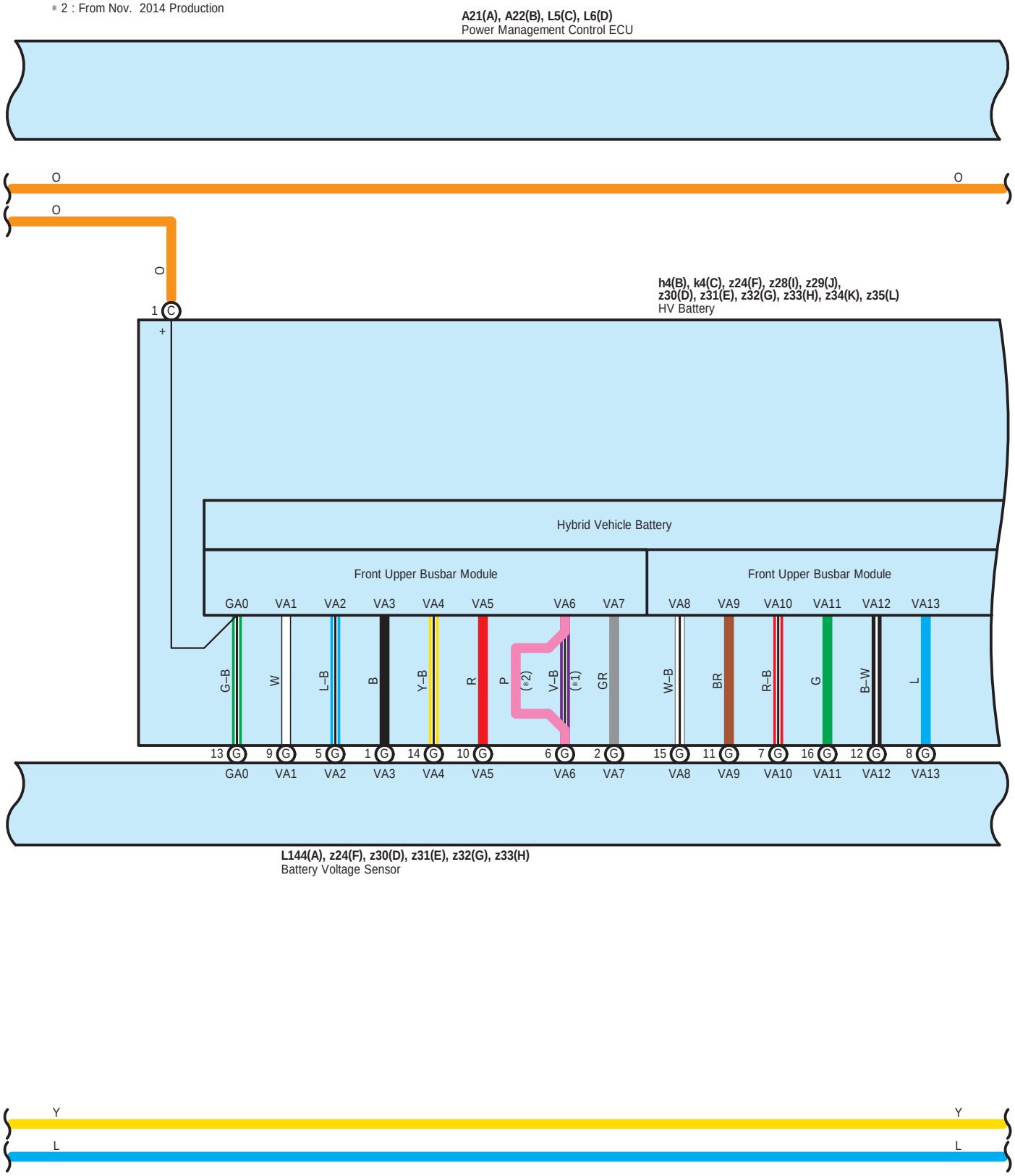

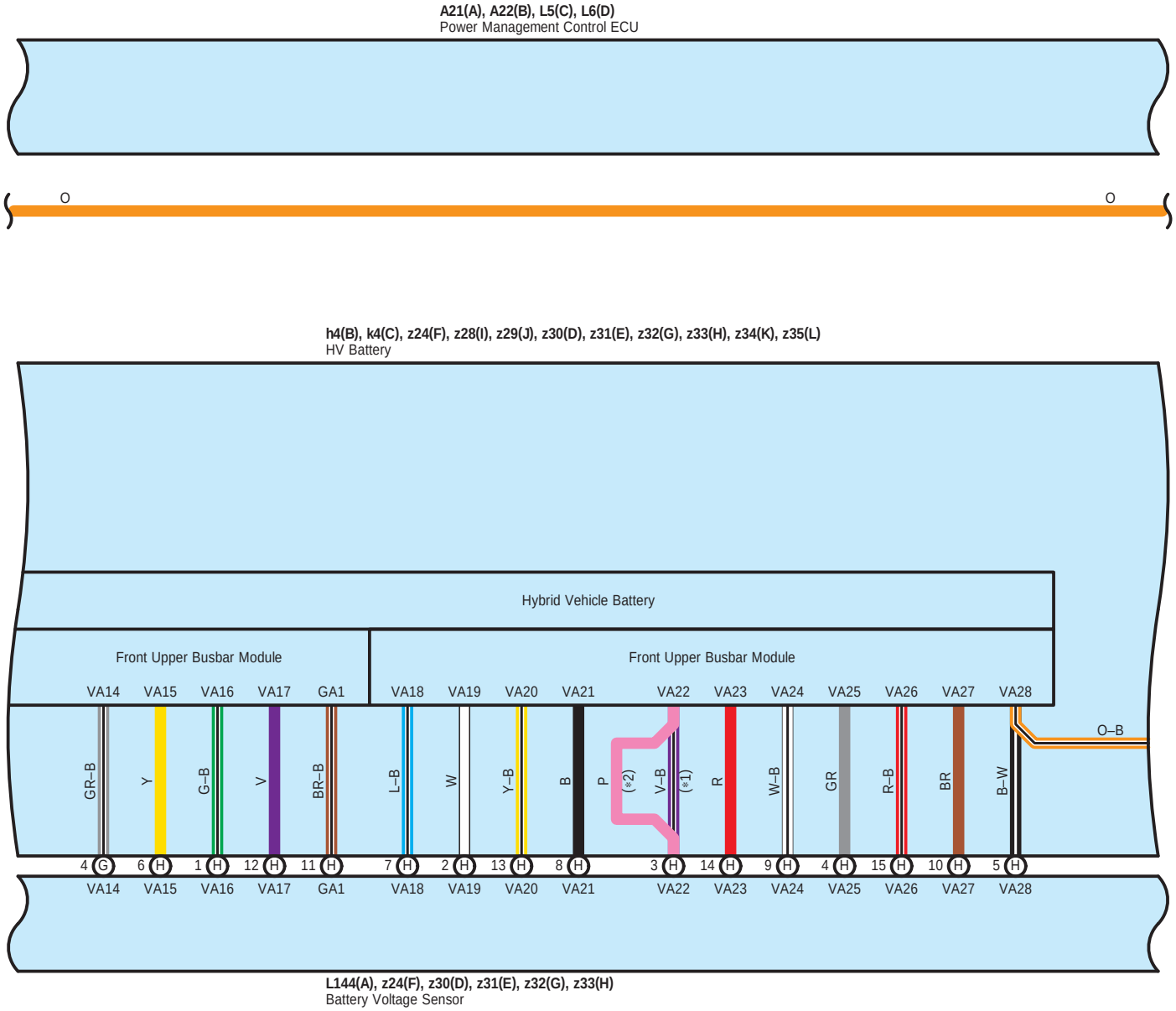
A21(A), A22(B), L5(C), L6(D)
Power Management Control ECU
O
O
h4(B), k4(C), z24(F), z28(I), z29(J), z30(D), z31(E), z32(G), z33(H), z34(K), z35(L)
HV Battery
Hybrid Vehicle Battery
Front Upper Busbar Module
Front Upper Busbar Module
VA14 VA15 VA16 VA17 GA1 VA18 VA19 VA20 VA21 VA22 VA23 VA24 VA25 VA26 VA27 VA28
GR–B Y G–B V BR–B L–B W Y–B B P (*2) V–B (*1) R W–B GR R–B BR B–W
O–B
4 G 6 H 1 H 12 H 11 H 7 H 2 H 13 H 8 H 3 H 14 H 9 H 4 H 15 H 10 H 5 H
VA14 VA15 VA16 VA17 GA1 VA18 VA19 VA20 VA21 VA22 VA23 VA24 VA25 VA26 VA27 VA28
L144(A), z24(F), z30(D), z31(E), z32(G), z33(H)
Battery Voltage Sensor
Y
Y
L
L

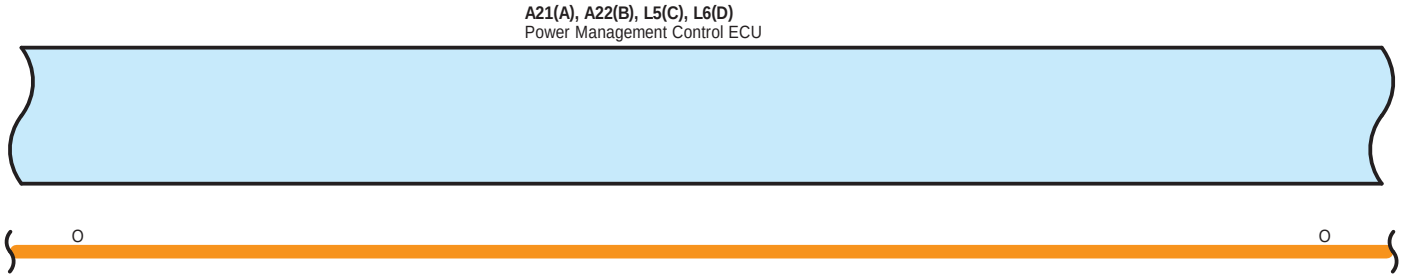

∗ 1 : Before Nov. 2014 Production
∗ 2 : From Nov. 2014 Production

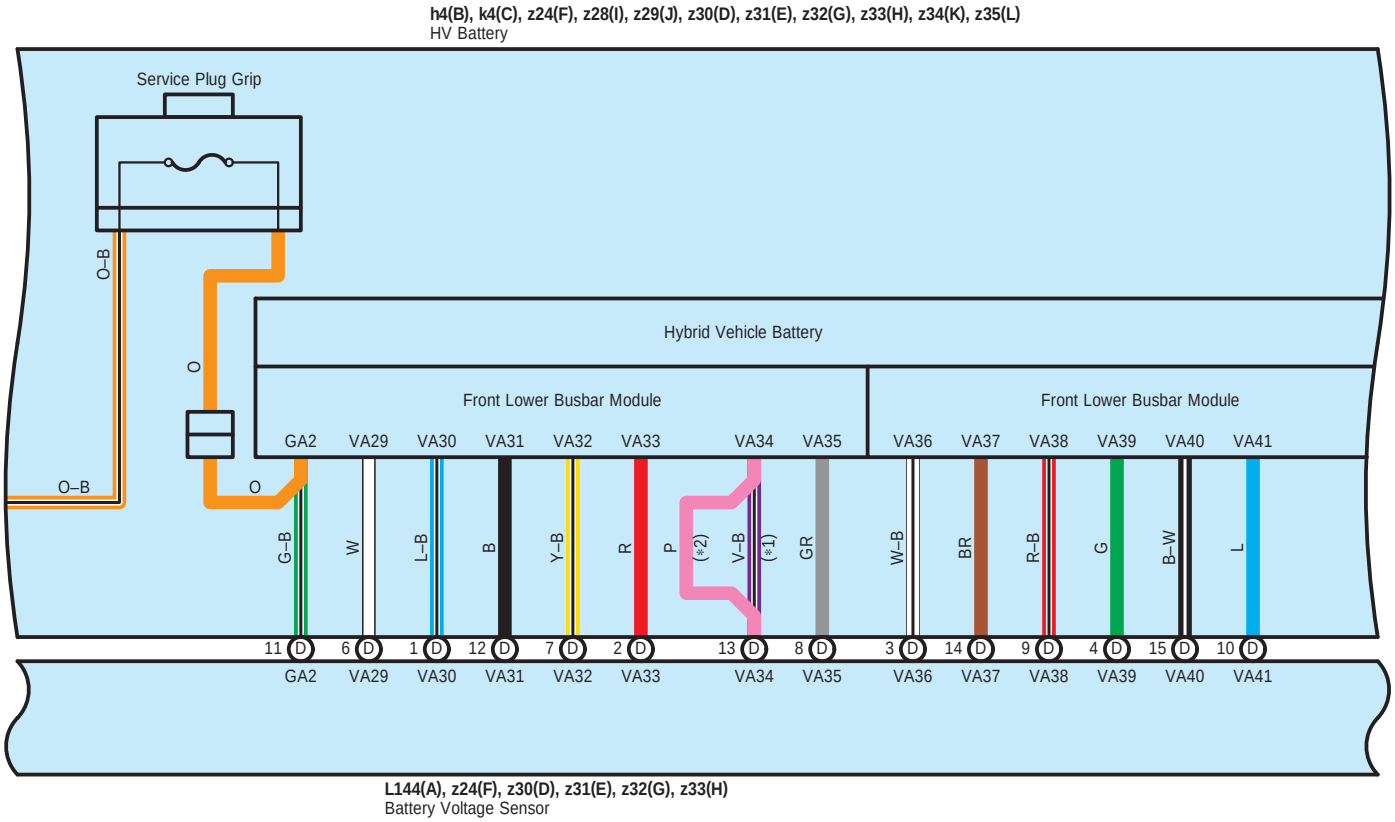

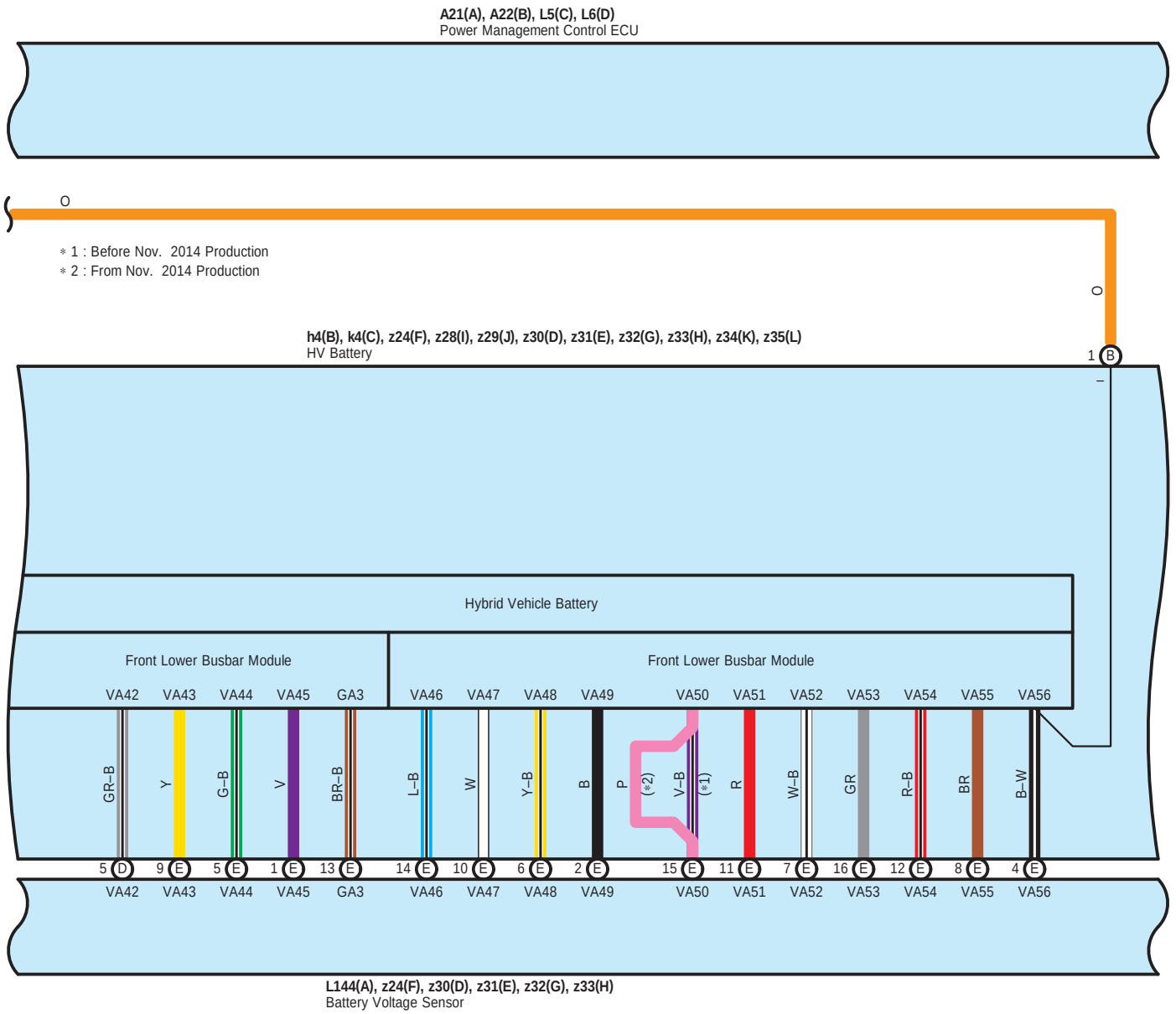
A21(A), A22(B), L5(C), L6(D)
Power Management Control ECU
O
* 1 : Before Nov. 2014 Production
* 2 : From Nov. 2014 Production
O
h4(B), k4(C), z24(F), z28(I), z29(J), z30(D), z31(E), z32(G), z33(H), z34(K), z35(L)
HV Battery
1 B
–
Hybrid Vehicle Battery
Front Lower Busbar Module
Front Lower Busbar Module
VA42 VA43 VA44 VA45 GA3 VA46 VA47 VA48 VA49 VA50 VA51 VA52 VA53 VA54 VA55 VA56
GR–B Y G–B V BR–B L–B W Y–B B P (*2) V–B (*1) R W–B GR R–B BR B–W
5 D 9 E 5 E 1 E 13 E 14 E 10 E 6 E 2 E 15 E 11 E 7 E 16 E 12 E 8 E 4 E
VA42 VA43 VA44 VA45 GA3 VA46 VA47 VA48 VA49 VA50 VA51 VA52 VA53 VA54 VA55 VA56
L144(A), z24(F), z30(D), z31(E), z32(G), z33(H)
Battery Voltage Sensor

Y
Y
L
L

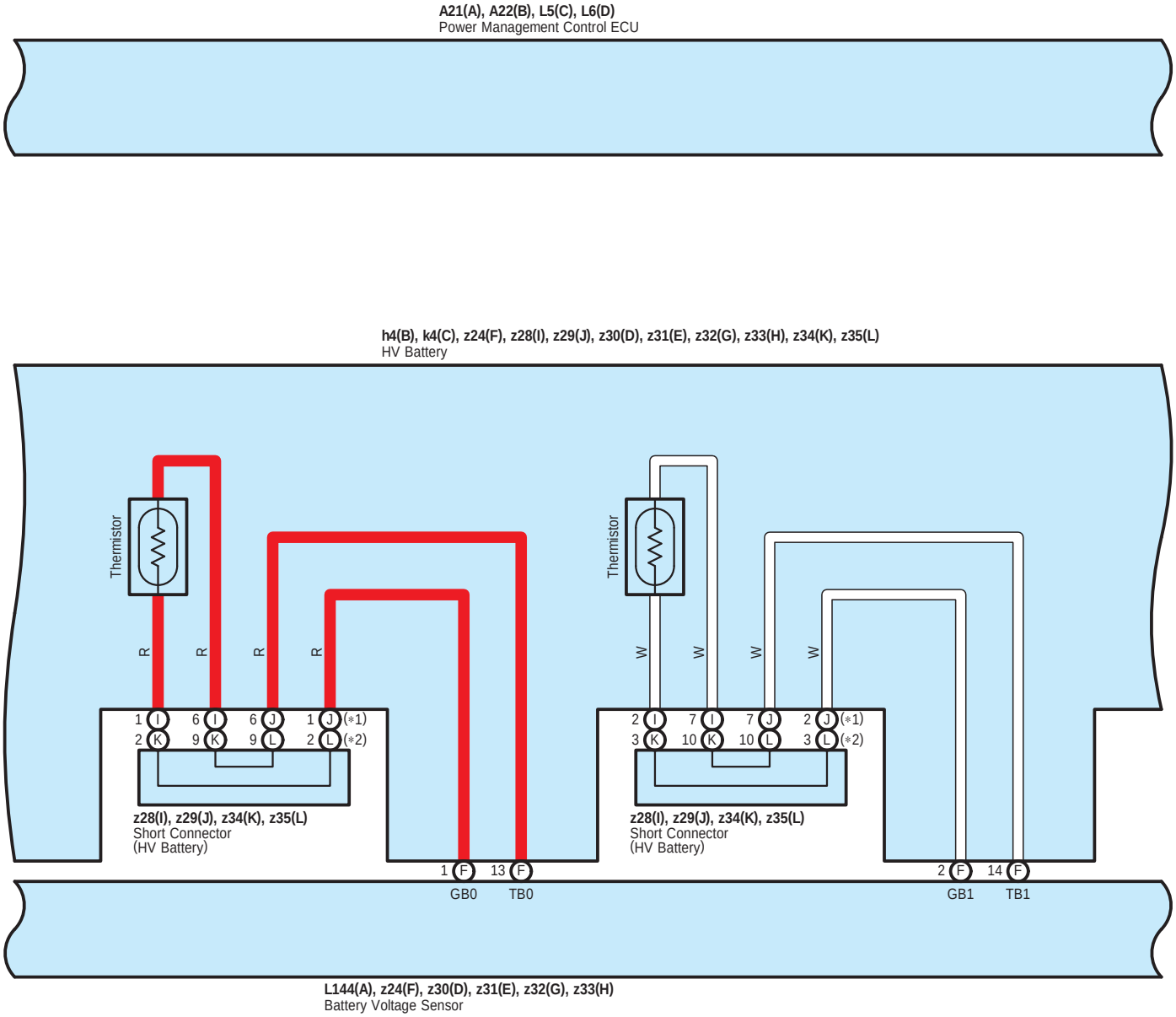
A21(A), A22(B), L5(C), L6(D)
Power Management Control ECU
h4(B), k4(C), z24(F), z28(I), z29(J), z30(D), z31(E), z32(G), z33(H), z34(K), z35(L)
HV Battery
Thermistor
R
R
R
R
1 I
2 K
6 I
9 K
6 J
9 L
1 J (*1)
2 L (*2)
z28(I), z29(J), z34(K), z35(L)
Short Connector
(HV Battery)
1 F
GB0
13 F
TB0
Thermistor
W
W
W
W
2 I
3 K
7 I
10 K
7 J
10 L
2 J (*1)
3 L (*2)
z28(I), z29(J), z34(K), z35(L)
Short Connector
(HV Battery)
2 F
GB1
14 F
TB1
L144(A), z24(F), z30(D), z31(E), z32(G), z33(H)
Battery Voltage Sensor

Y
Y
L
L

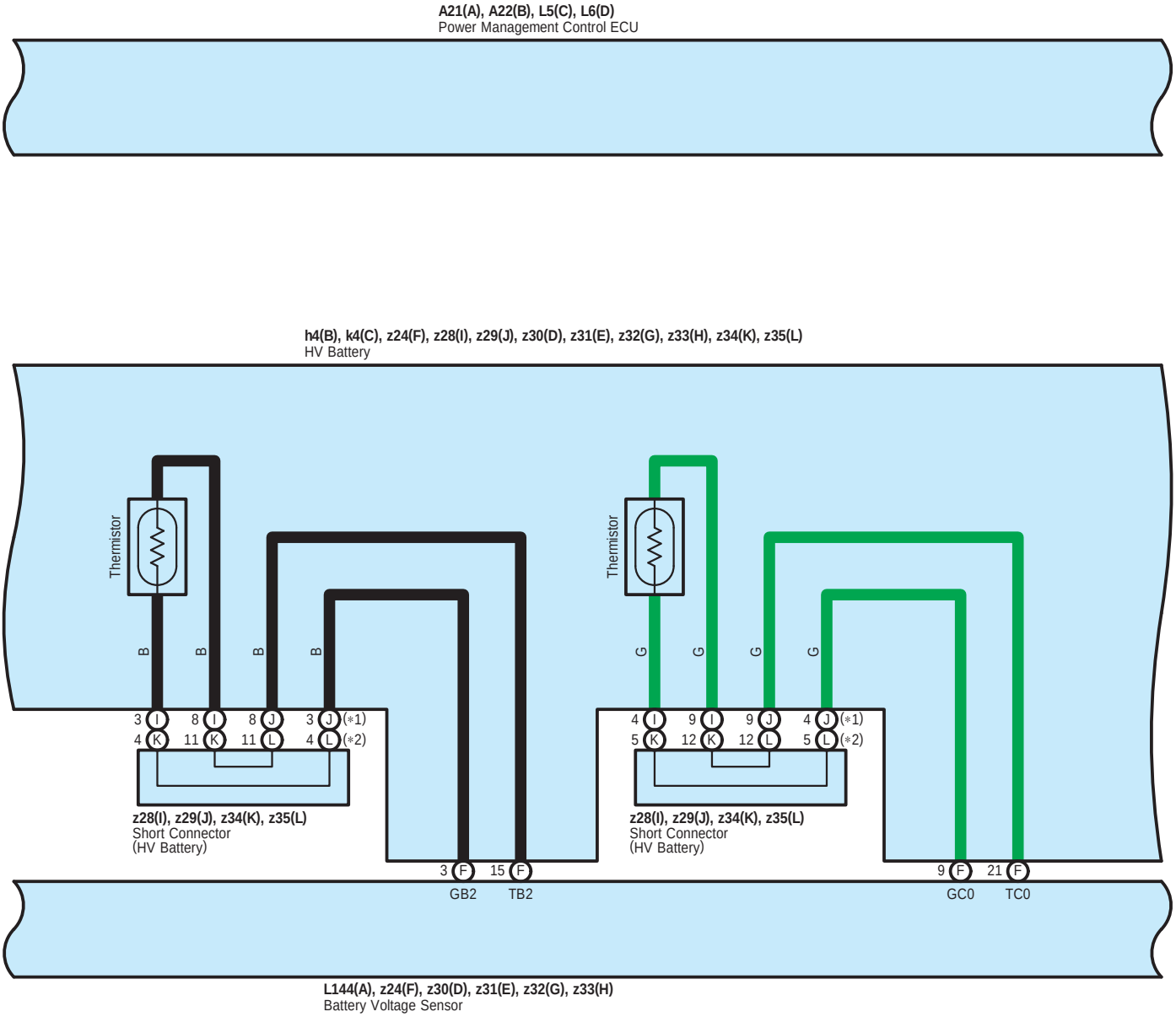

* 1 : Before Nov. 2014 Production
* 2 : From Nov. 2014 Production
* 5 : Before May 2016 Production
* 6 : From May 2016 Production
* 7 : Before Dec. 2017 Production
* 8 : From Dec. 2017 Production

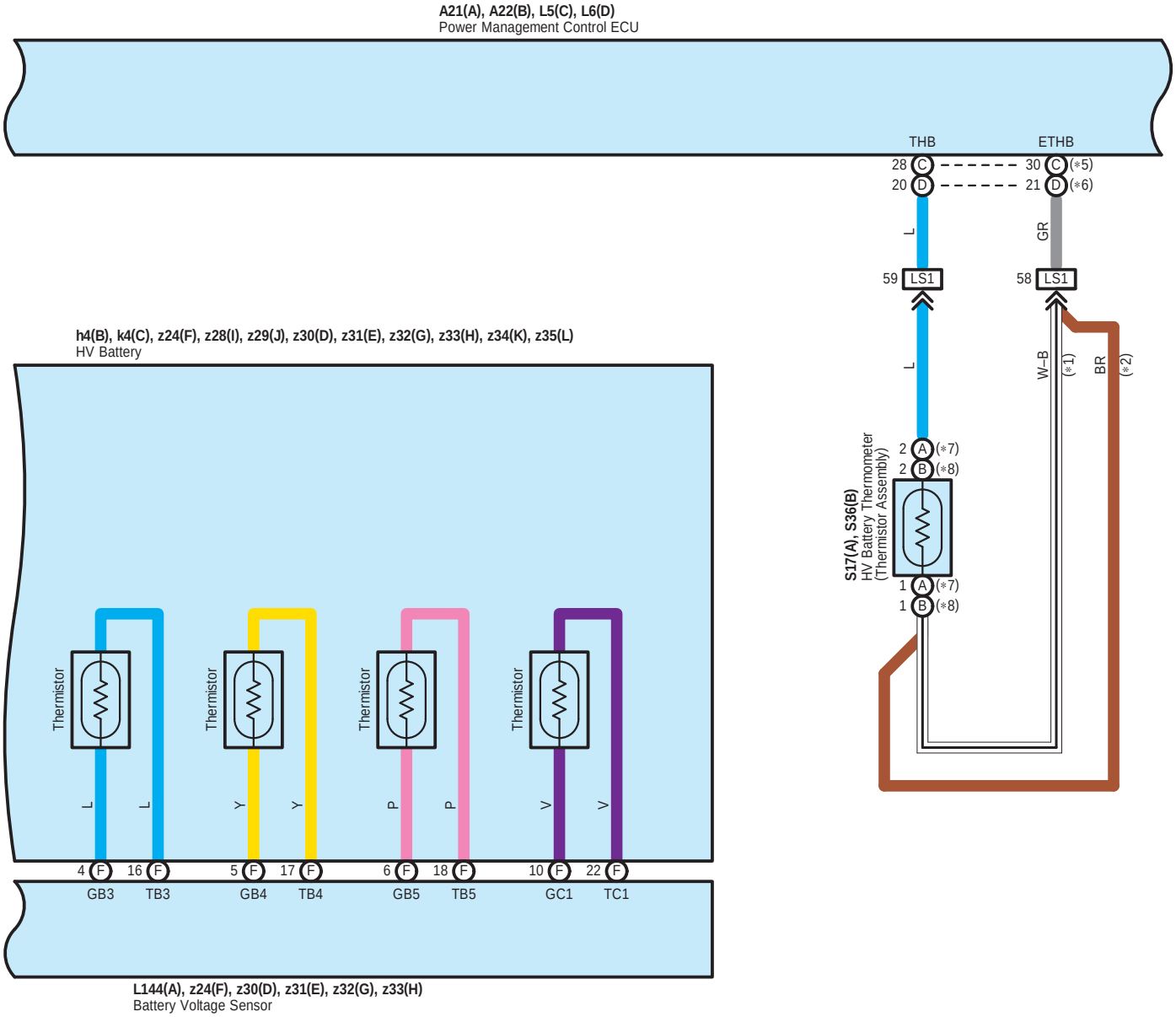
A21(A), A22(B), L5(C), L6(D)
Power Management Control ECU
THB
ETHB
28 C
20 D
30 C (*5)
21 D (*6)
L
GR
59 LS1
58 LS1
L
W-B
(*1)
BR
(*2)
S17(A), S36(B)
HV Battery Thermometer
(Thermistor Assembly)
2 A (*7)
2 B (*8)
1 A (*7)
1 B (*8)
h4(B), k4(C), z24(F), z28(I), z29(J), z30(D), z31(E), z32(G), z33(H), z34(K), z35(L)
HV Battery
Thermistor
Thermistor
Thermistor
Thermistor
L
L
Y
Y
P
P
V
V
4 F
16 F
5 F
17 F
6 F
18 F
10 F
22 F
GB3
TB3
GB4
TB4
GB5
TB5
GC1
TC1
L144(A), z24(F), z30(D), z31(E), z32(G), z33(H)
Battery Voltage Sensor

Y
Y
L
L

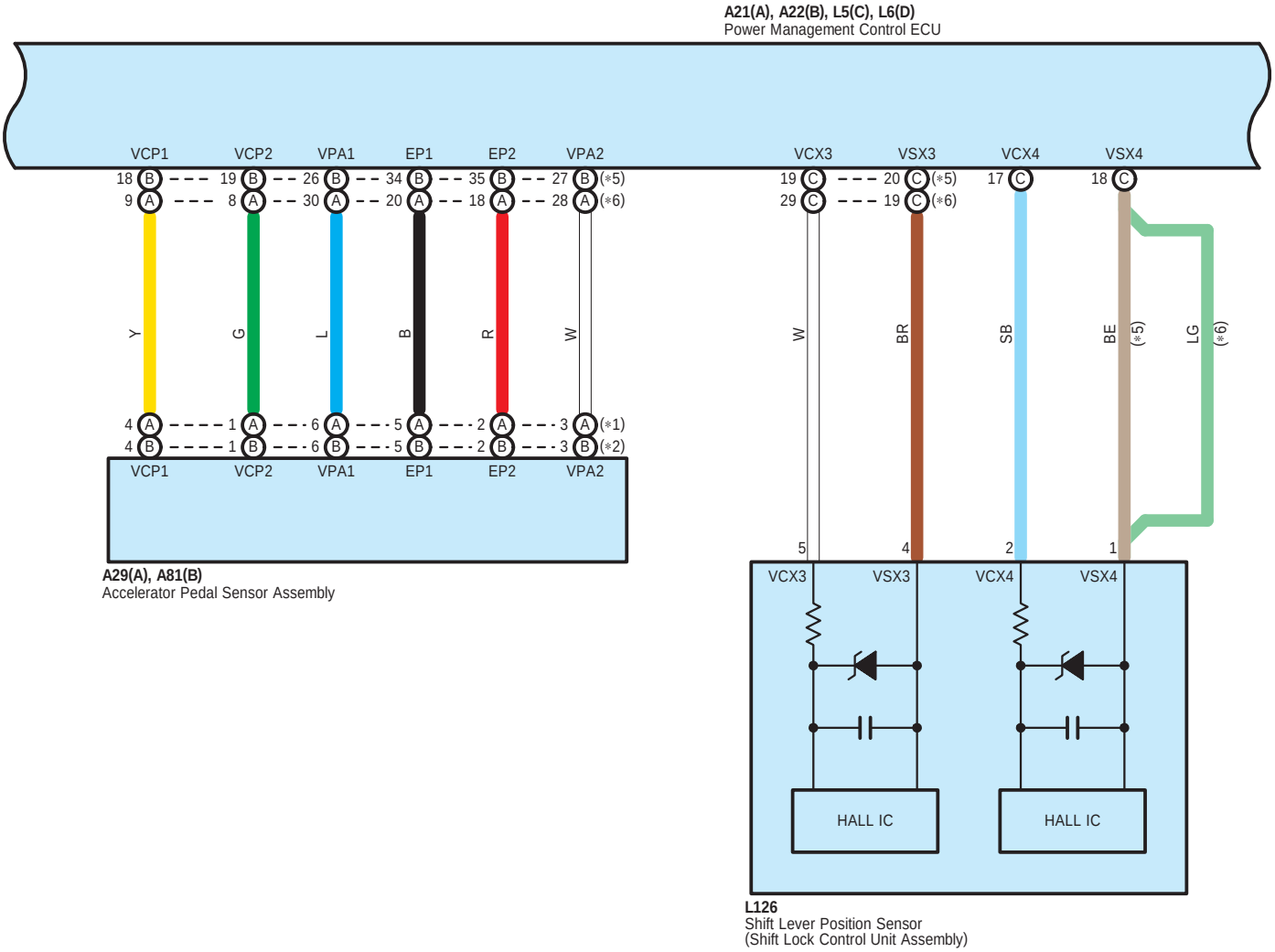

∗ 1 : Before Nov. 2014 Production
∗ 2 : From Nov. 2014 Production
∗ 5 : Before May 2016 Production
∗ 6 : From May 2016 Production

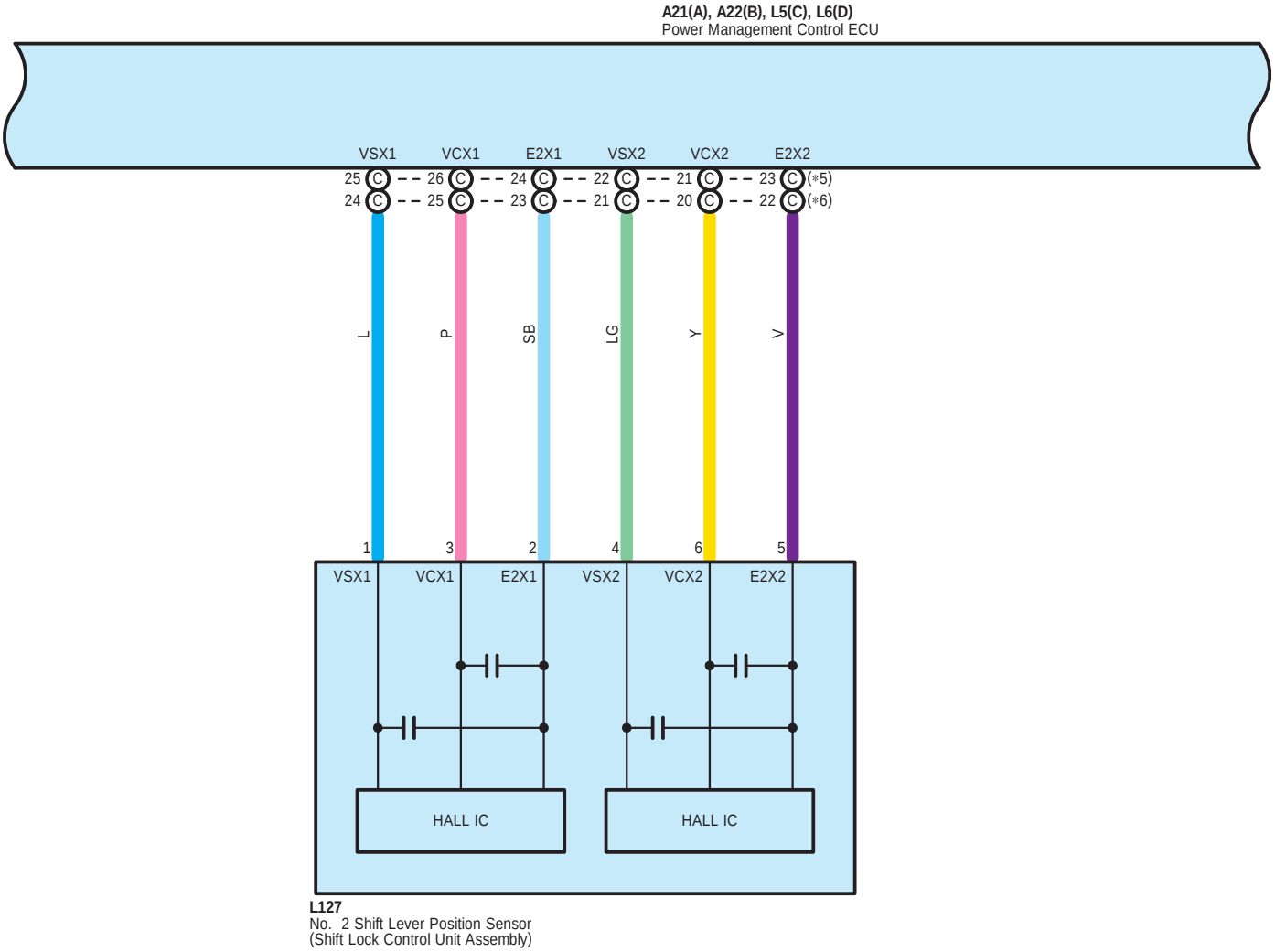
A21(A), A22(B), L5(C), L6(D)
Power Management Control ECU
VSX1
VCX1
E2X1
VSX2
VCX2
E2X2
25 C 26 C 24 C 22 C 21 C 23 C (*5)
24 C 25 C 23 C 21 C 20 C 22 C (*6)
L
P
SB
LG
Y
V
1
3
2
4
6
5
VSX1
VCX1
E2X1
VSX2
VCX2
E2X2
HALL IC
HALL IC
L127
No. 2 Shift Lever Position Sensor
(Shift Lock Control Unit Assembly)

Y
Y
L
L

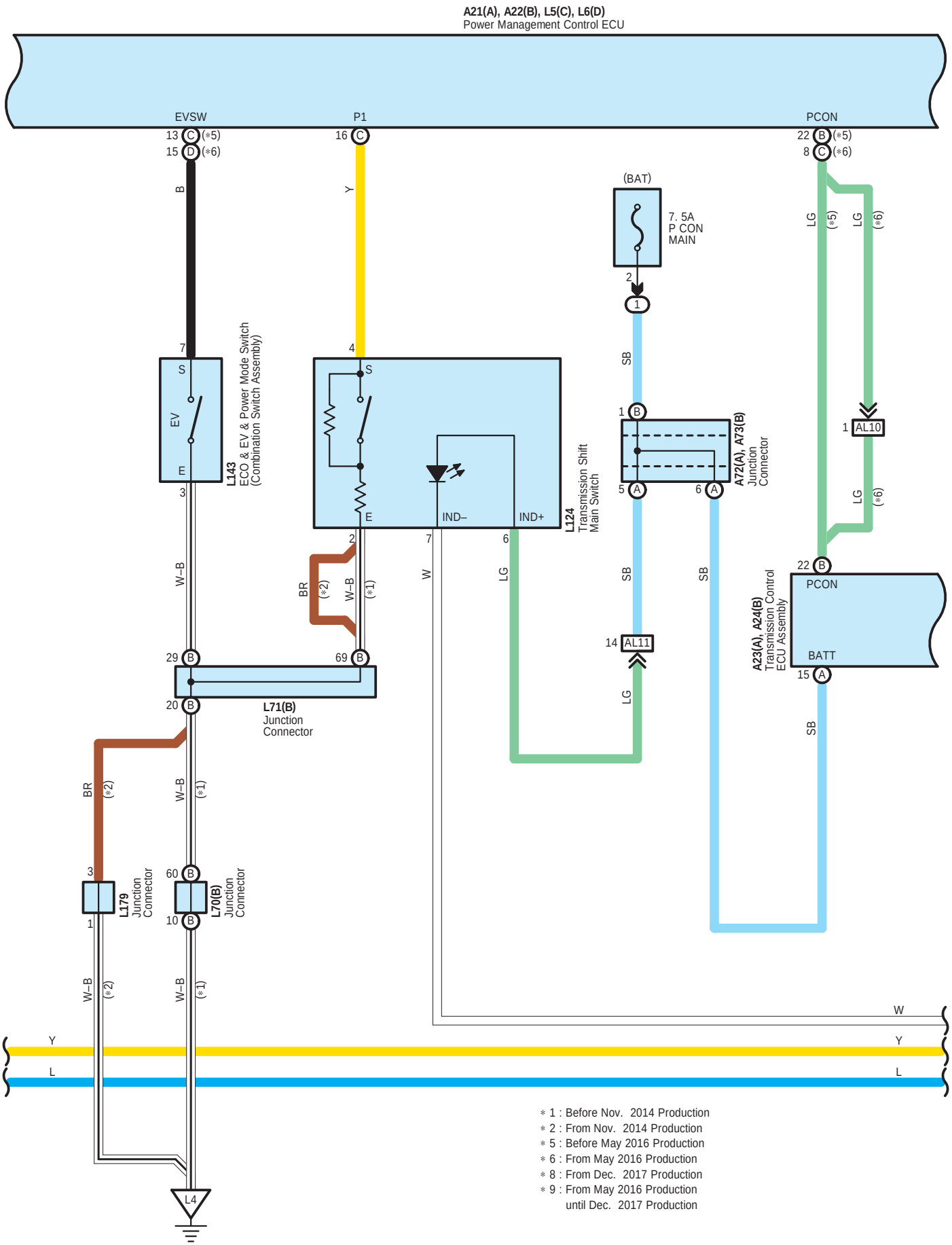

* 1 : Before Nov. 2014 Production
* 2 : From Nov. 2014 Production
* 5 : Before May 2016 Production
* 6 : From May 2016 Production
* 8 : From Dec. 2017 Production
* 9 : From May 2016 Production until Dec. 2017 Production

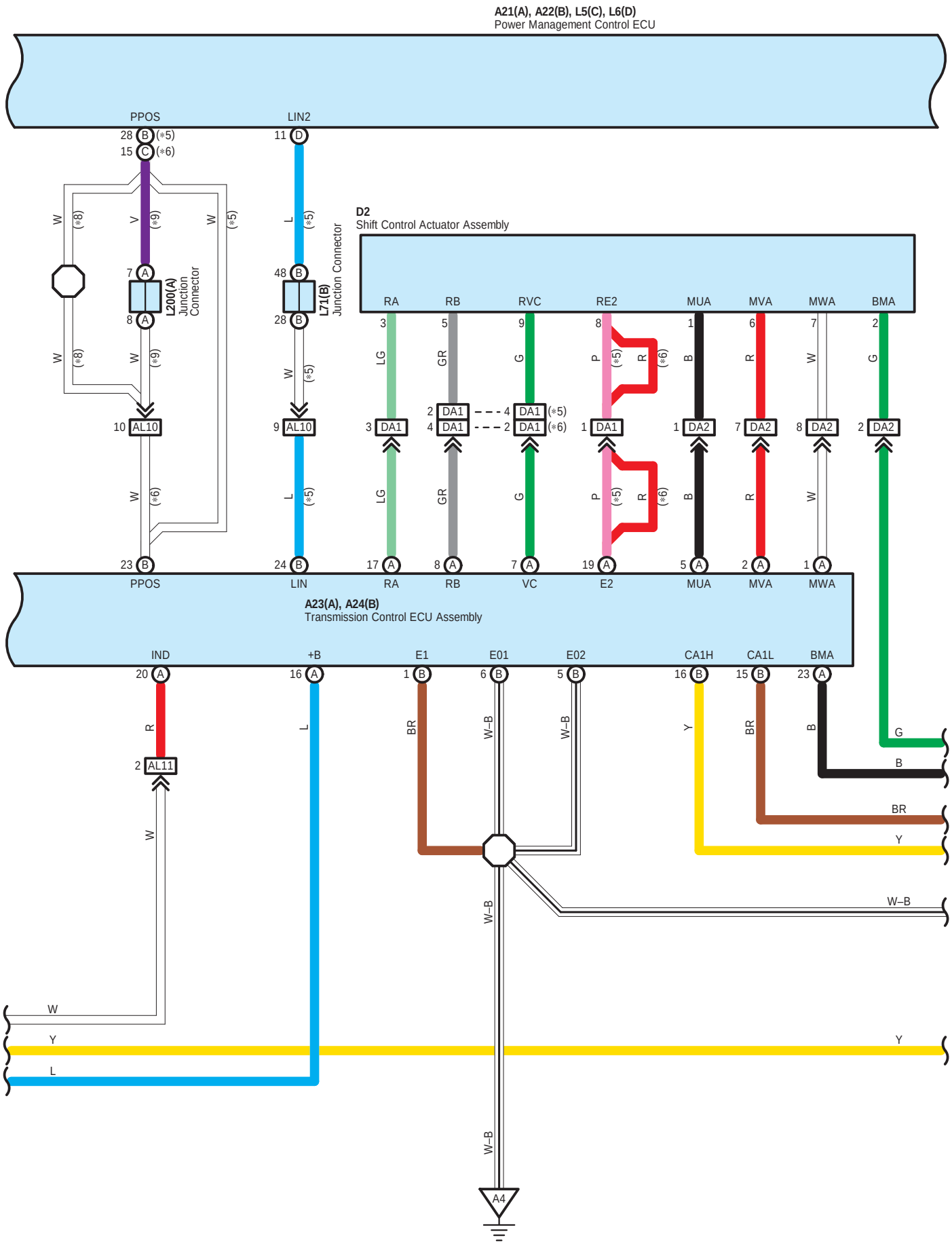
A21(A), A22(B), L5(C), L6(D)
Power Management Control ECU
PPOS
LIN2
D2
Shift Control Actuator Assembly
L200(A)
Junction Connector
L71(B)
Junction Connector
RA
RB
RVC
RE2
MUA
MVA
MWA
BMA
AL10
DA1
DA2
PPOS
LIN
RA
RB
VC
E2
MUA
MVA
MWA
A23(A), A24(B)
Transmission Control ECU Assembly
IND
+B
E1
E01
E02
CA1H
CA1L
BMA
AL11
A4

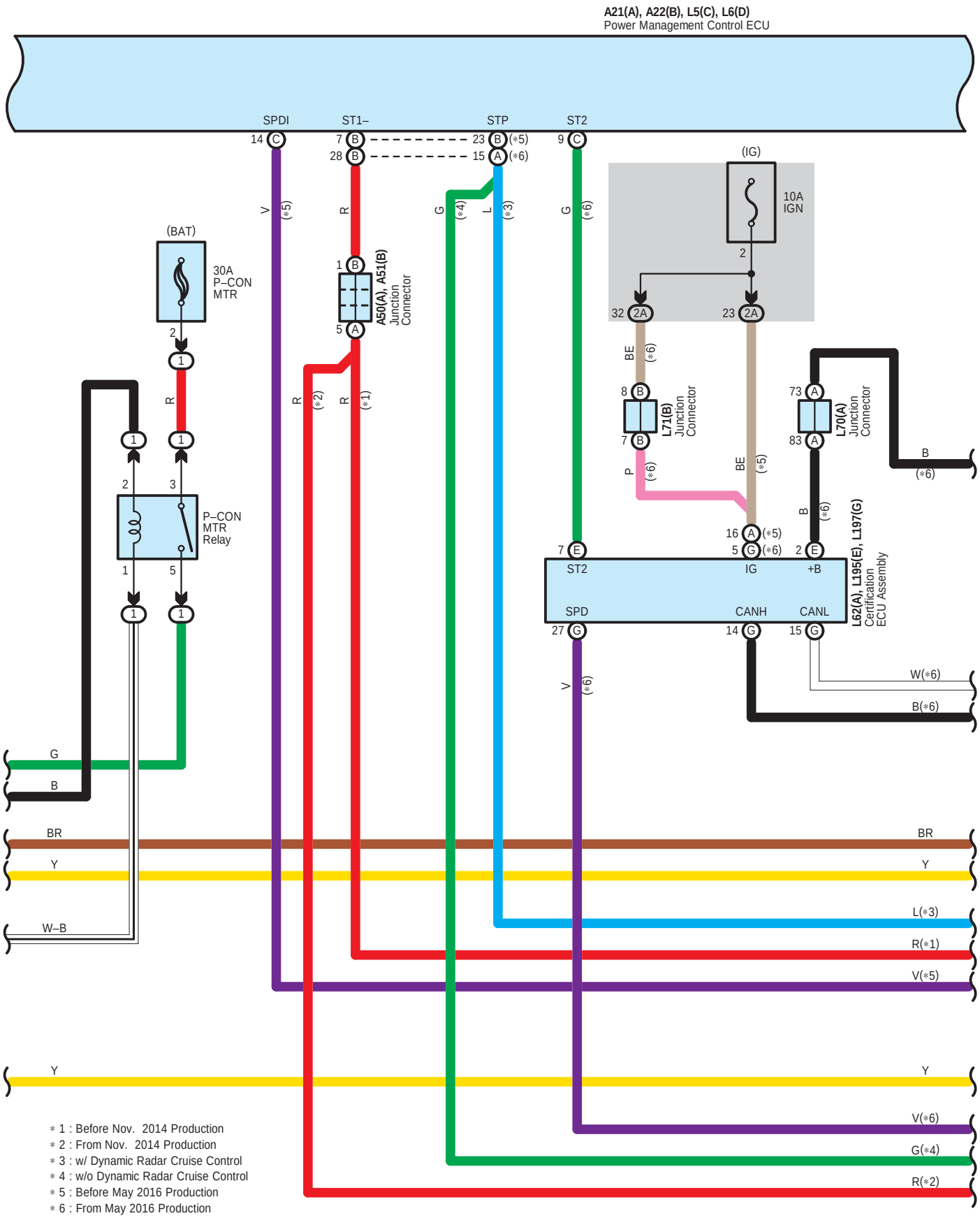
A21(A), A22(B), L5(C), L6(D)
Power Management Control ECU
SPDI
ST1–
STP
ST2
14 C
7 B
28 B
23 B (∗5)
15 A (∗6)
9 C
(IG)
10A
IGN
2
32 2A
23 2A
(BAT)
30A
P–CON
MTR
2
1
A50(A), A51(B)
Junction
Connector
1 B
5 A
BE (∗6)
8 B
7 B
L71(B)
Junction
Connector
P (∗6)
BE (∗5)
73 A
83 A
L70(A)
Junction
Connector
B (∗6)
B (∗6)
P–CON
MTR
Relay
1
5
2
3
16 A (∗5)
5 G (∗6)
7 E
2 E
ST2
IG
+B
SPD
CANH
CANL
27 G
14 G
15 G
L62(A), L195(E), L197(G)
Certification
ECU Assembly
W(∗6)
B(∗6)
V (∗6)
G
B
BR
Y
W–B
L(∗3)
R(∗1)
V(∗5)
Y
V(∗6)
G(∗4)
R(∗2)
∗ 1 : Before Nov. 2014 Production
∗ 2 : From Nov. 2014 Production
∗ 3 : w/ Dynamic Radar Cruise Control
∗ 4 : w/o Dynamic Radar Cruise Control
∗ 5 : Before May 2016 Production
∗ 6 : From May 2016 Production

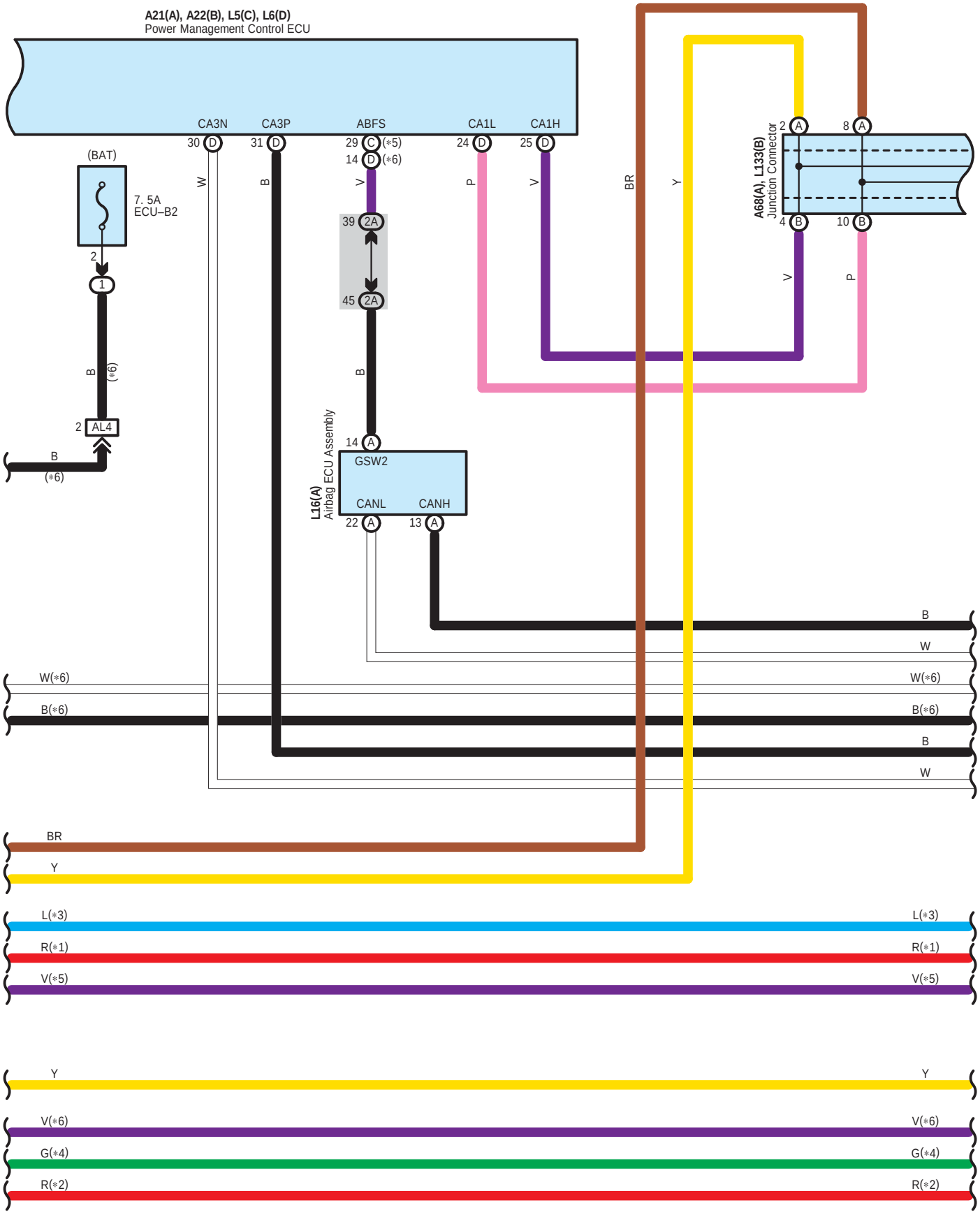
A21(A), A22(B), L5(C), L6(D)
Power Management Control ECU
CA3N
CA3P
ABFS
CA1L
CA1H
30 D
31 D
29 C (*5)
14 D (*6)
24 D
25 D
(BAT)
7. 5A
ECU–B2
2
1
B
(*6)
2 AL4
B
(*6)
W
B
V
P
V
BR
Y
39 2A
45 2A
B
14 A
GSW2
CANL
CANH
22 A
13 A
L16(A)
Airbag ECU Assembly
A68(A), L133(B)
Junction Connector
2 A
8 A
4 B
10 B
V
P
B
W
W(*6)
B(*6)
B
W
BR
Y
L(*3)
R(*1)
V(*5)
Y
V(*6)
G(*4)
R(*2)

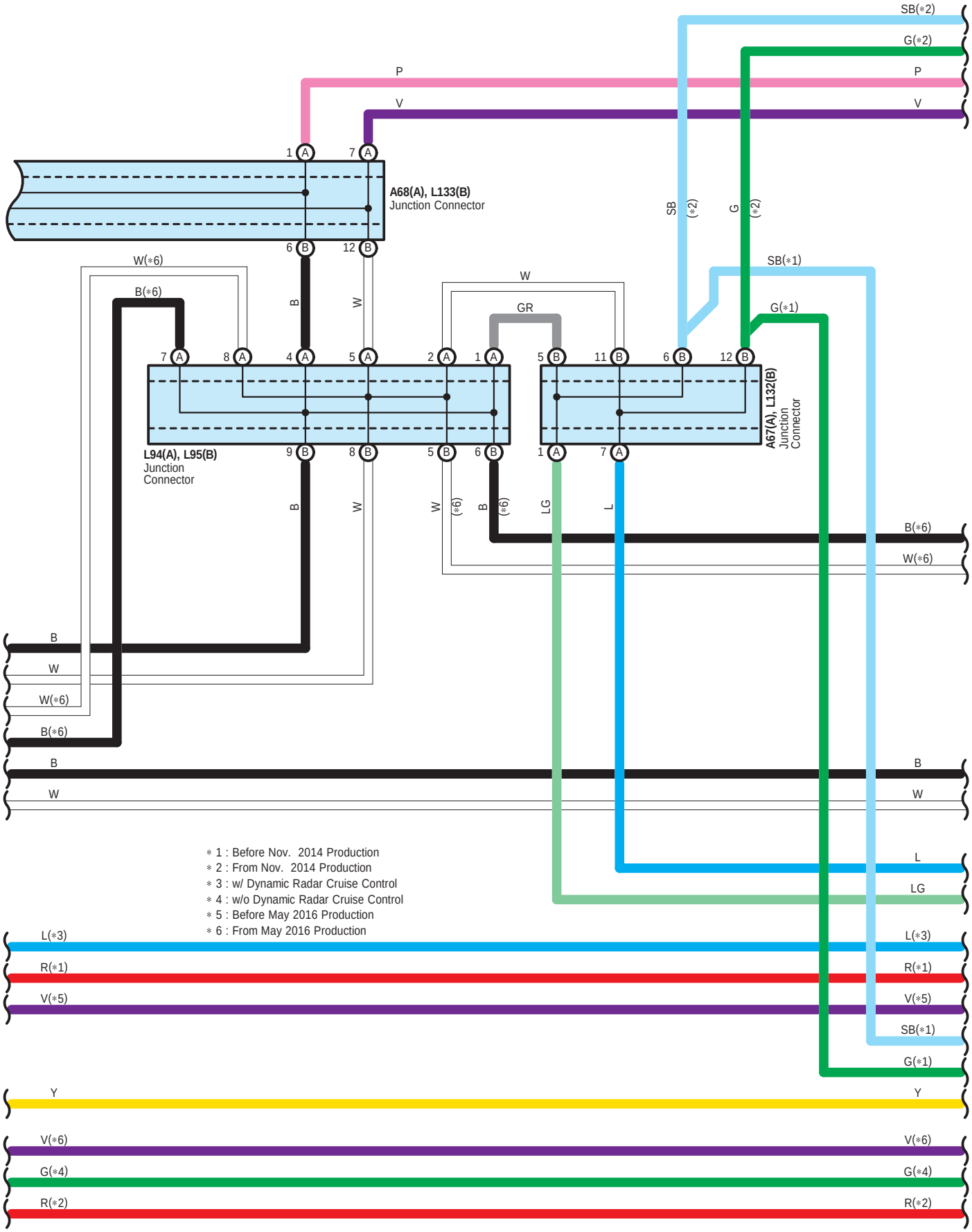
SB(∗2)
G(∗2)
P
V
A68(A), L133(B)
Junction Connector
W(∗6)
B(∗6)
SB(∗1)
G(∗1)
GR
L94(A), L95(B)
Junction
Connector
A67(A), L132(B)
Junction
Connector
B
W
LG
L
∗ 1 : Before Nov. 2014 Production
∗ 2 : From Nov. 2014 Production
∗ 3 : w/ Dynamic Radar Cruise Control
∗ 4 : w/o Dynamic Radar Cruise Control
∗ 5 : Before May 2016 Production
∗ 6 : From May 2016 Production
L(∗3)
R(∗1)
V(∗5)
Y
V(∗6)
G(∗4)
R(∗2)

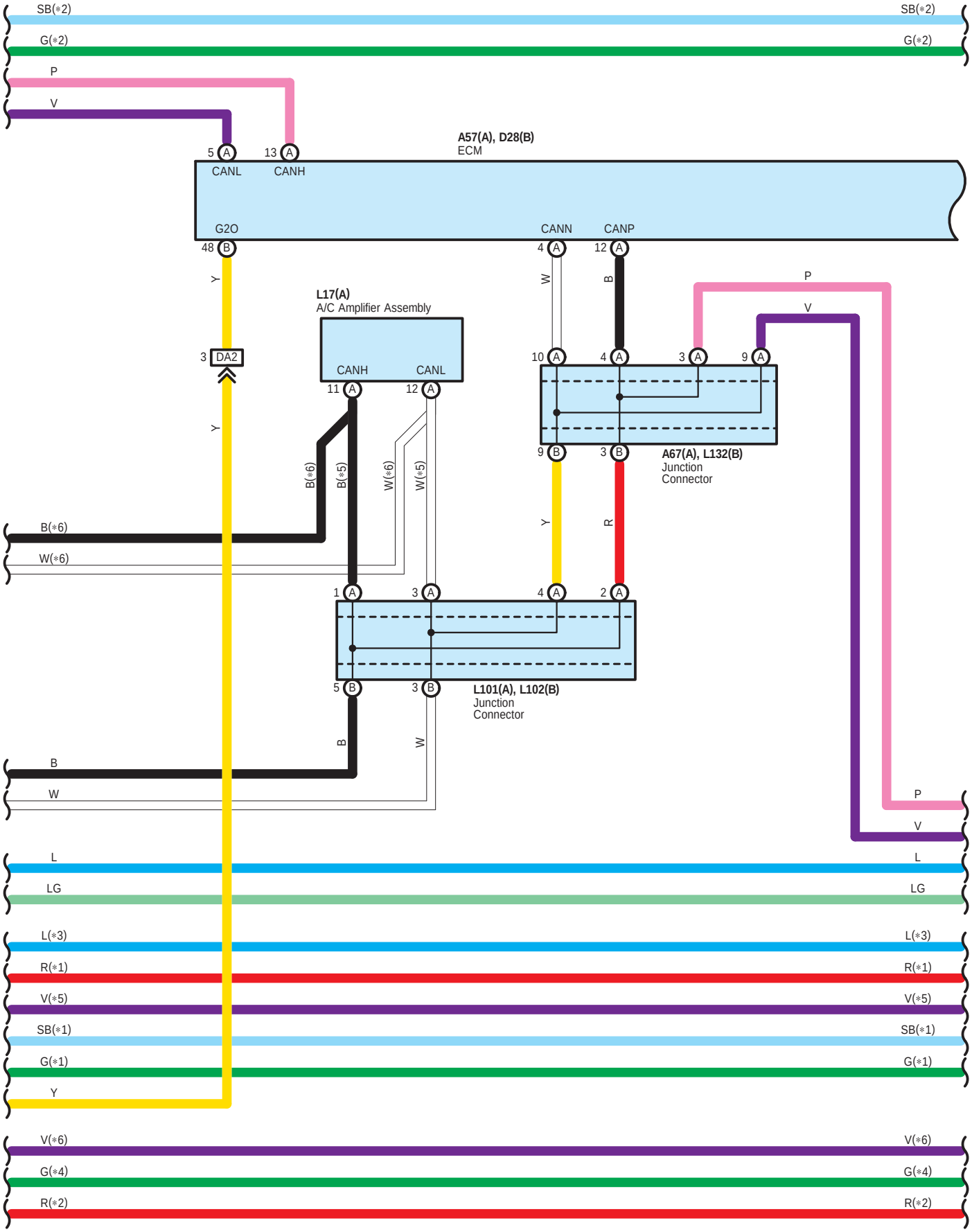
SB(*2)
G(*2)
P
V
A57(A), D28(B)
ECM
5 A
CANL
13 A
CANH
G2O
48 B
CANN
4 A
CANP
12 A
Y
W
B
L17(A)
A/C Amplifier Assembly
3 DA2
CANH
CANL
11 A
12 A
10 A
4 A
3 A
9 A
9 B
3 B
A67(A), L132(B)
Junction
Connector
B(*6)
B(*5)
W(*6)
W(*5)
R
1 A
3 A
4 A
2 A
5 B
3 B
L101(A), L102(B)
Junction
Connector
L
LG
L(*3)
R(*1)
V(*5)
SB(*1)
G(*1)
V(*6)
G(*4)
R(*2)

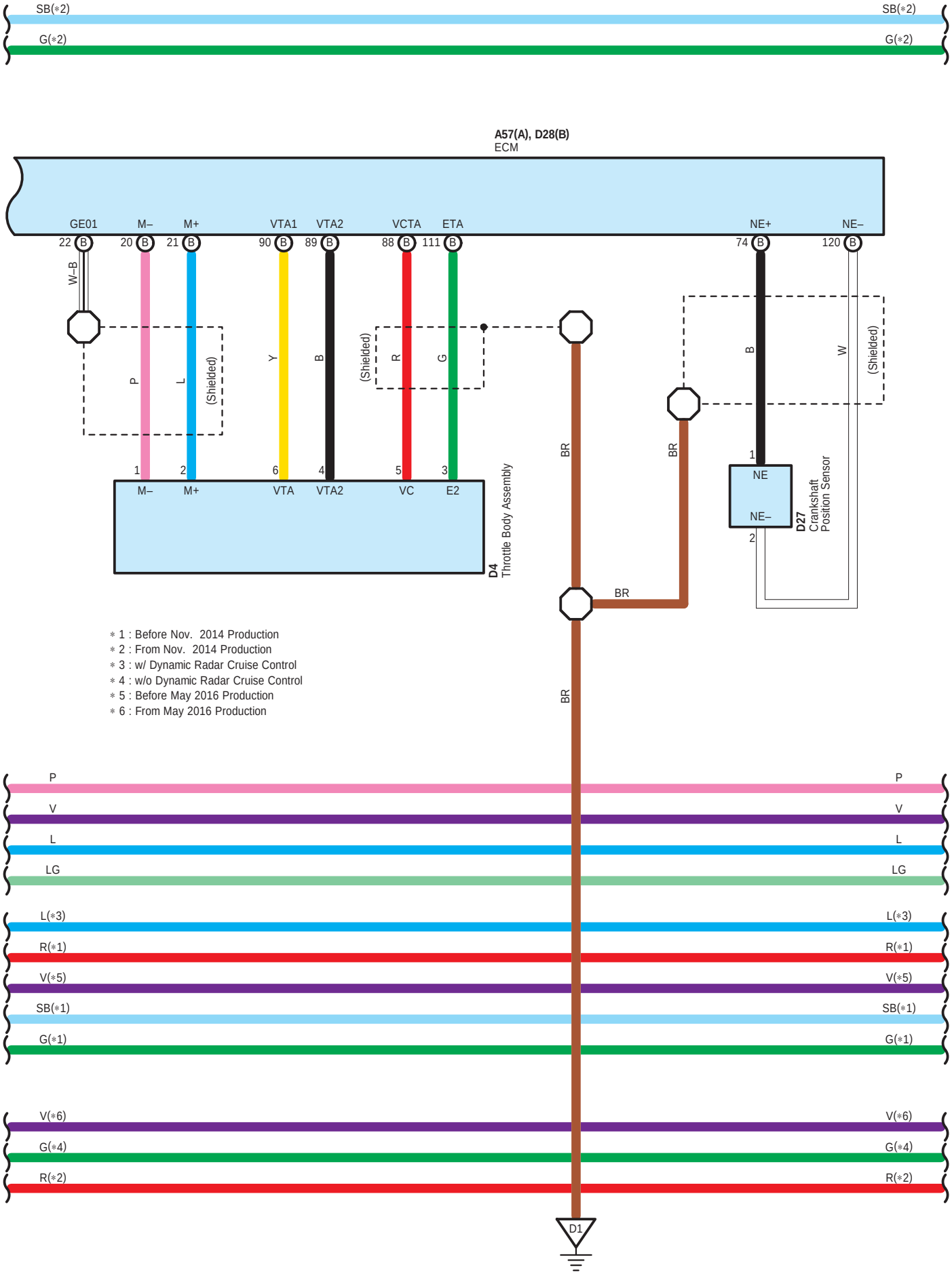
SB(*2)
G(*2)
A57(A), D28(B)
ECM
GE01
M–
M+
VTA1
VTA2
VCTA
ETA
NE+
NE–
22
20
21
90
89
88
111
74
120
W–B
P
L
(Shielded)
Y
B
R
G
W
1
2
6
4
5
3
M–
M+
VTA
VTA2
VC
E2
D4
Throttle Body Assembly
BR
NE
NE–
D27
Crankshaft
Position Sensor
* 1 : Before Nov. 2014 Production
* 2 : From Nov. 2014 Production
* 3 : w/ Dynamic Radar Cruise Control
* 4 : w/o Dynamic Radar Cruise Control
* 5 : Before May 2016 Production
* 6 : From May 2016 Production
P
V
L
LG
L(*3)
R(*1)
V(*5)
SB(*1)
G(*1)
V(*6)
G(*4)
R(*2)
D1

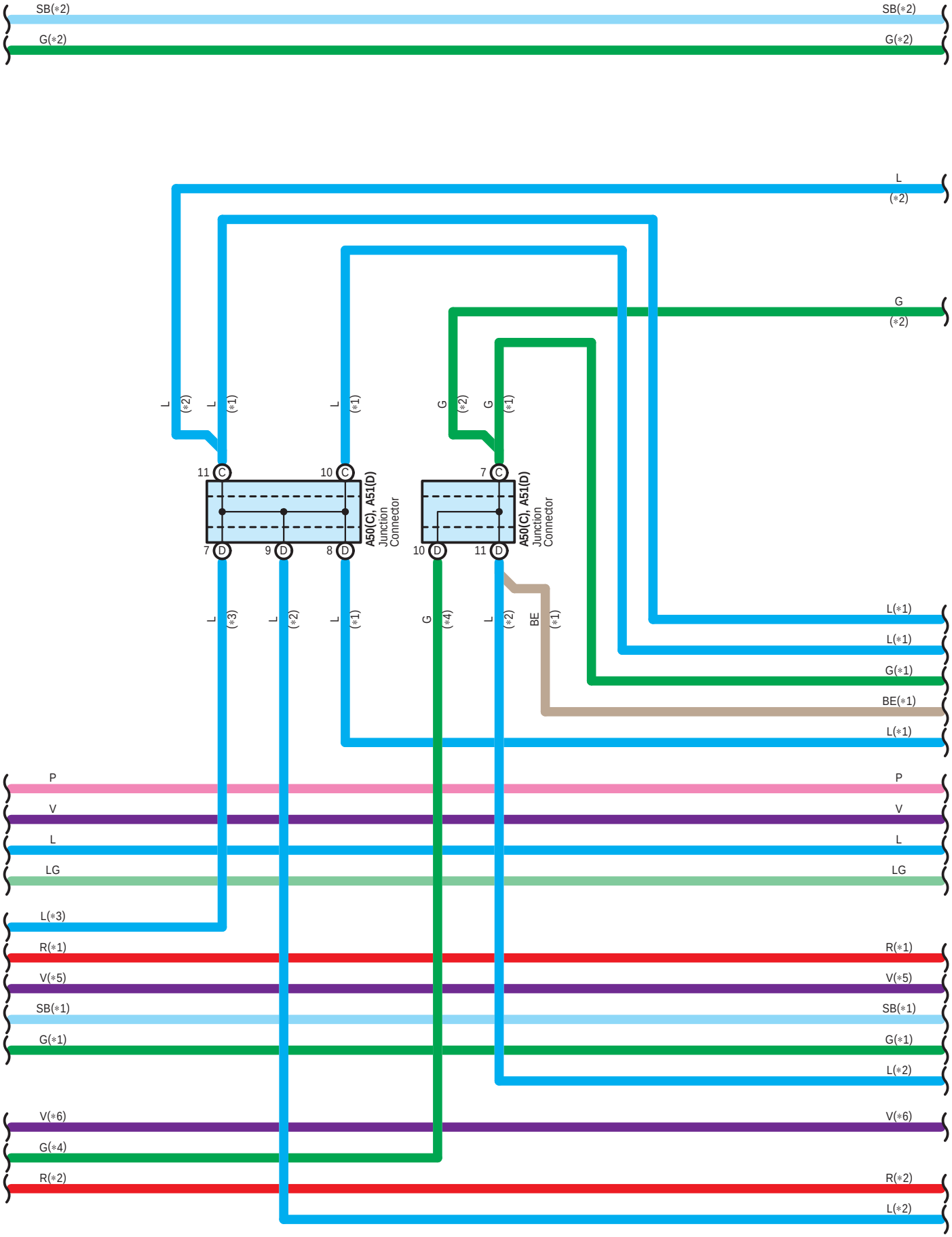
SB(*2)
G(*2)
L (*2)
G (*2)
L (*2)
L (*1)
L (*1)
G (*2)
G (*1)
11 C
10 C
7 C
A50(C), A51(D) Junction Connector
7 D
9 D
8 D
10 D
11 D
L (*3)
L (*2)
L (*1)
G (*4)
L (*2)
BE (*1)
L(*1)
L(*1)
G(*1)
BE(*1)
L(*1)
P
V
L
LG
L(*3)
R(*1)
V(*5)
SB(*1)
G(*1)
L(*2)
V(*6)
G(*4)
R(*2)
L(*2)

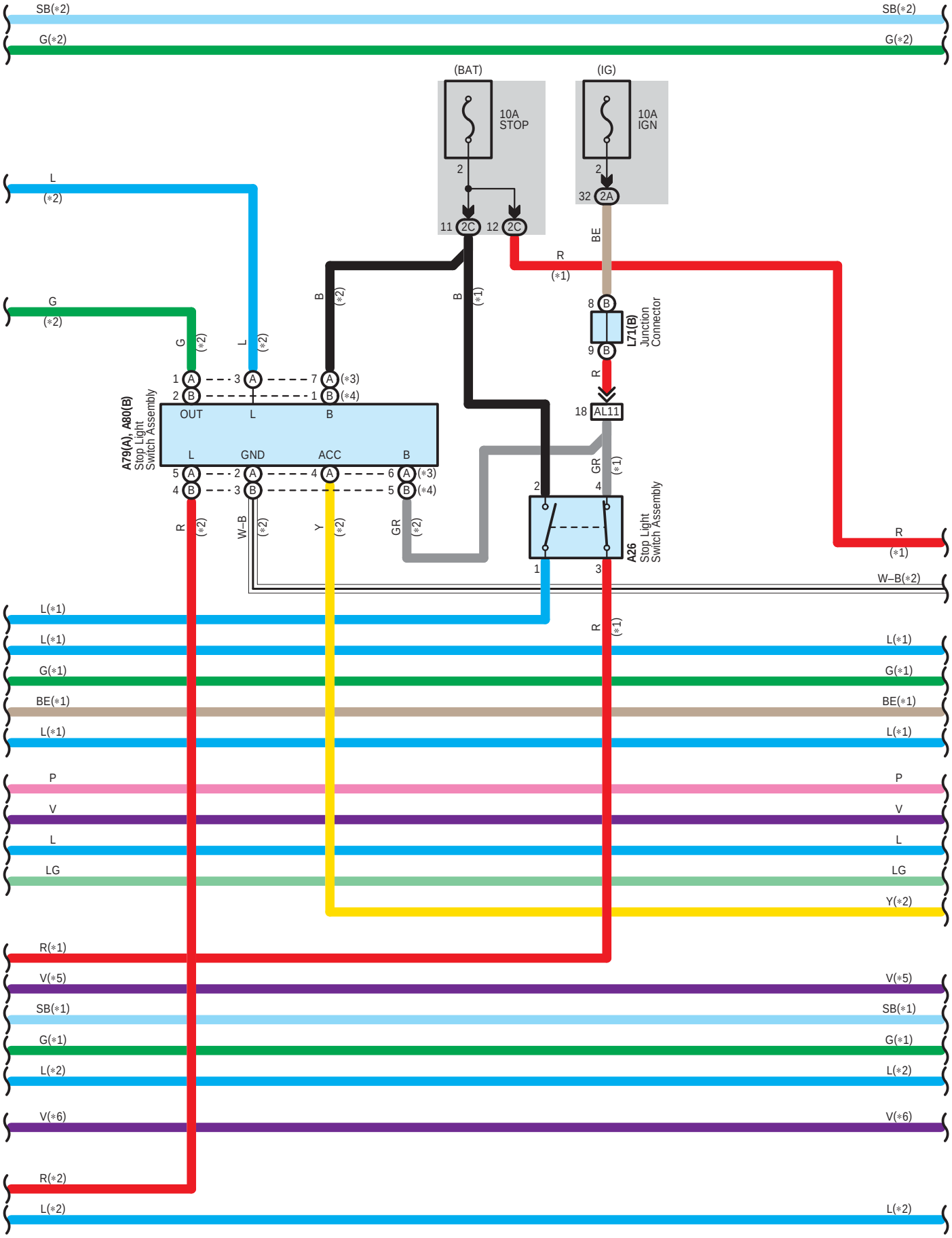
SB(*2)
G(*2)
(BAT)
10A
STOP
(IG)
10A
IGN
L
(*2)
G
(*2)
11 2C
12 2C
32 2A
BE
R
(*1)
B
(*2)
B
(*1)
8 B
9 B
L71(B)
Junction
Connector
R
18 AL11
A79(A), A80(B)
Stop Light
Switch Assembly
OUT
L
B
GND
ACC
GR
(*1)
A26
Stop Light
Switch Assembly
W–B
Y
W–B(*2)
L(*1)
G(*1)
BE(*1)
P
V
LG
Y(*2)
R(*1)
V(*5)
SB(*1)
L(*2)
V(*6)
R(*2)

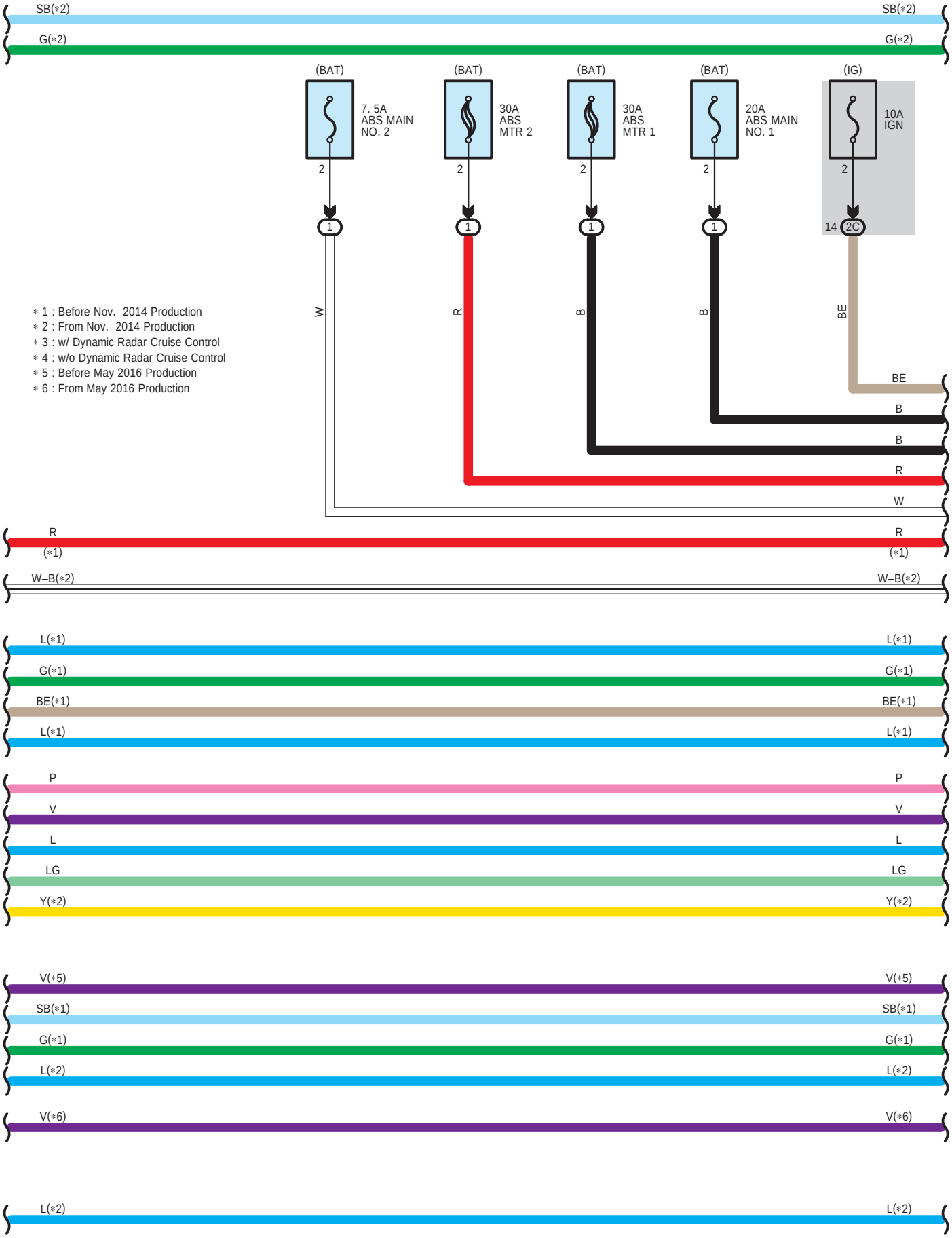
SB(∗2)
G(∗2)
(BAT)
7. 5A
ABS MAIN
NO. 2
(BAT)
30A
ABS
MTR 2
(BAT)
30A
ABS
MTR 1
(BAT)
20A
ABS MAIN
NO. 1
(IG)
10A
IGN
2
1
14
2C
W
R
B
B
BE
∗ 1 : Before Nov. 2014 Production
∗ 2 : From Nov. 2014 Production
∗ 3 : w/ Dynamic Radar Cruise Control
∗ 4 : w/o Dynamic Radar Cruise Control
∗ 5 : Before May 2016 Production
∗ 6 : From May 2016 Production
R
(∗1)
W–B(∗2)
L(∗1)
G(∗1)
BE(∗1)
P
V
L
LG
Y(∗2)
V(∗5)
SB(∗1)
L(∗2)
V(∗6)

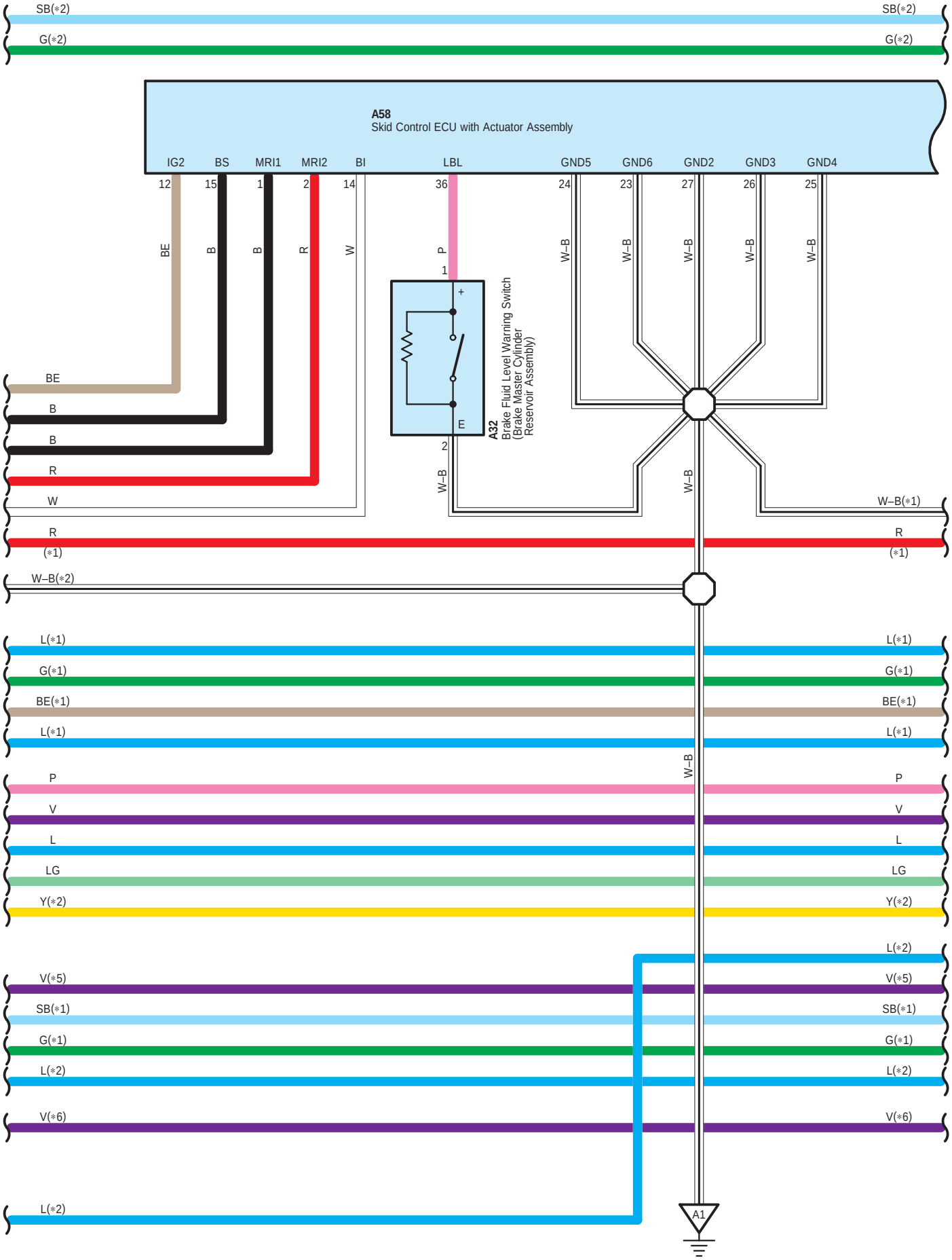
SB(*2)
G(*2)
A58
Skid Control ECU with Actuator Assembly
IG2
BS
MRI1
MRI2
BI
LBL
GND5
GND6
GND2
GND3
GND4
12
15
1
2
14
36
24
23
27
26
25
BE
B
B
R
W
P
1
W–B
A32
Brake Fluid Level Warning Switch
(Brake Master Cylinder
Reservoir Assembly)
+
E
2
W–B(*1)
R
(*1)
W–B(*2)
L(*1)
G(*1)
BE(*1)
P
V
L
LG
Y(*2)
L(*2)
V(*5)
SB(*1)
V(*6)
A1

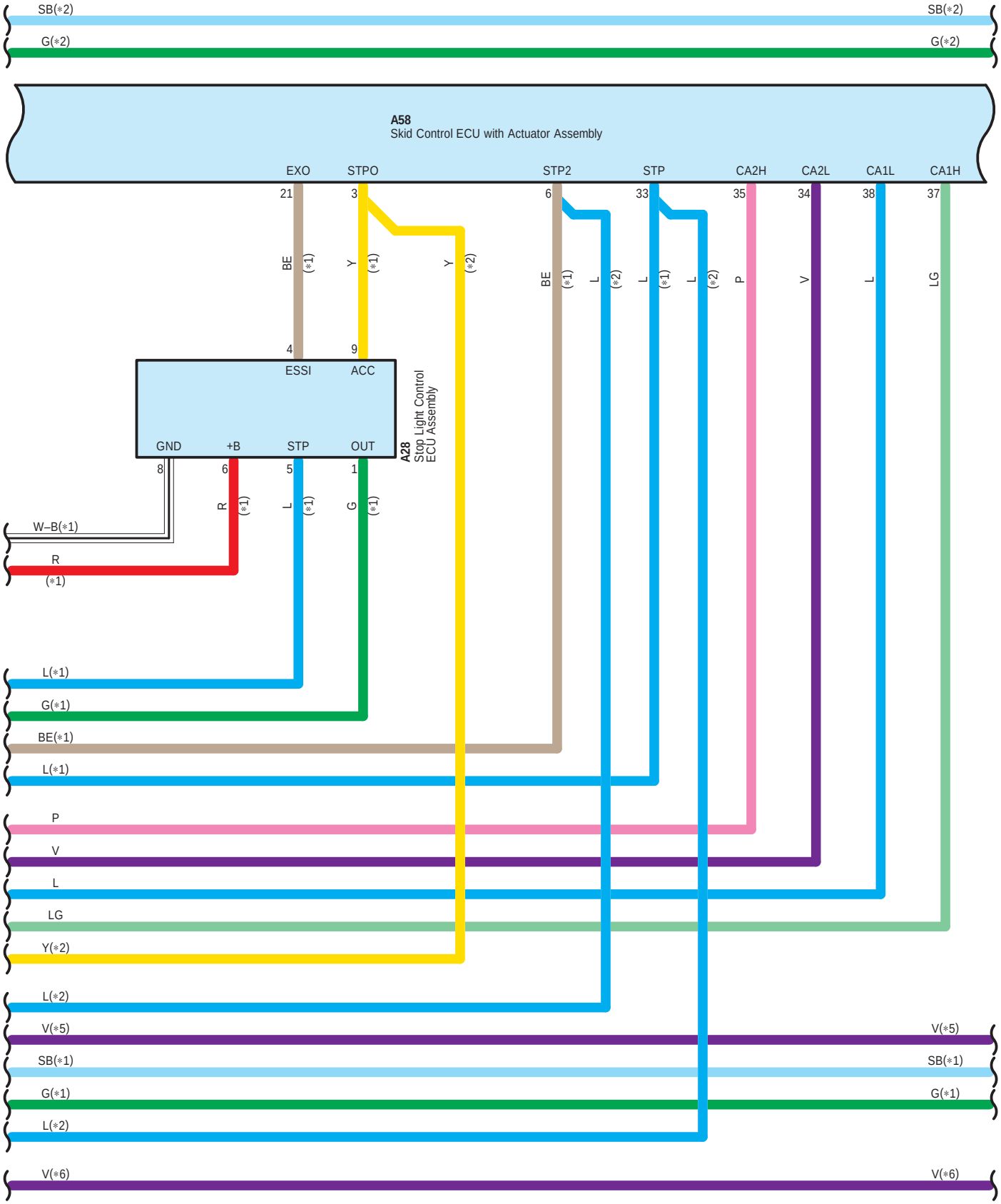

* 1 : Before Nov. 2014 Production
* 2 : From Nov. 2014 Production
* 5 : Before May 2016 Production
* 6 : From May 2016 Production

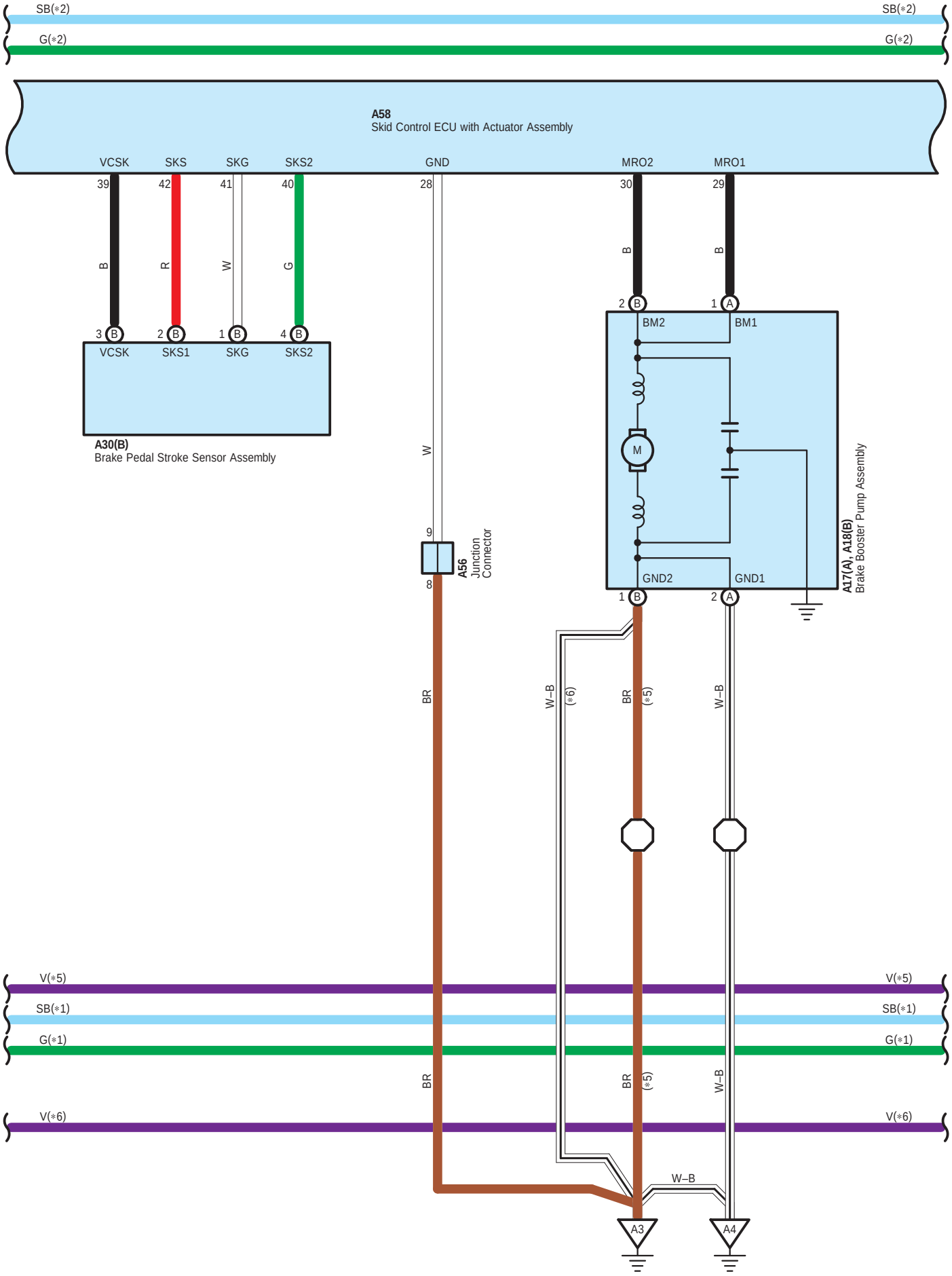
SB(*2)
G(*2)
A58
Skid Control ECU with Actuator Assembly
VCSK
SKS
SKG
SKS2
GND
MRO2
MRO1
39
42
41
40
28
30
29
B
R
W
G
W
B
B
3 B
2 B
1 B
4 B
VCSK
SKS1
SKG
SKS2
A30(B)
Brake Pedal Stroke Sensor Assembly
2 B
1 A
BM2
BM1
M
GND2
GND1
1 B
2 A
A17(A), A18(B)
Brake Booster Pump Assembly
9
8
A56
Junction Connector
BR
W–B
(*6)
BR
(*5)
W–B
V(*5)
SB(*1)
G(*1)
V(*6)
BR
BR
(*5)
W–B
W–B
A3
A4

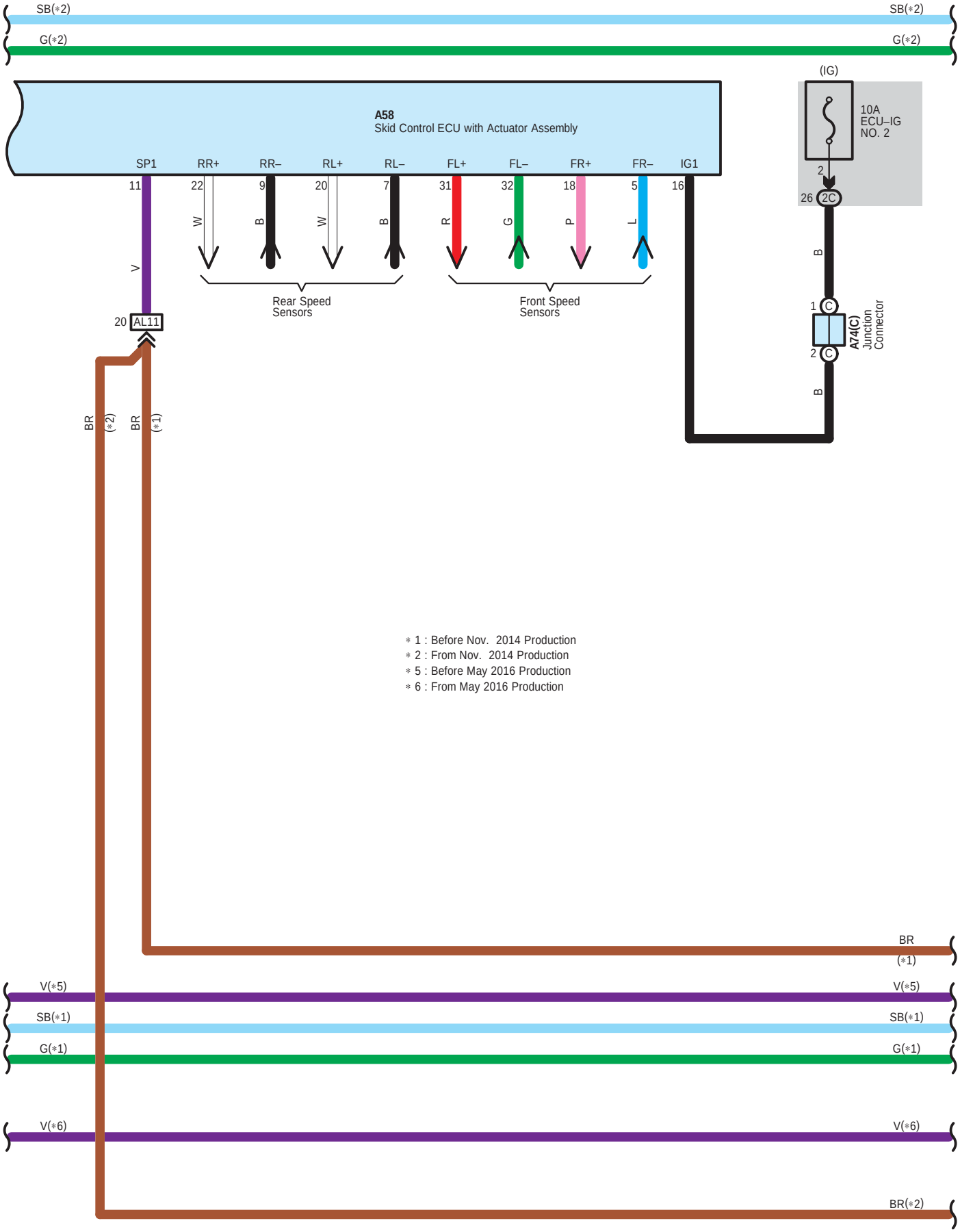
SB(∗2)
G(∗2)
A58
Skid Control ECU with Actuator Assembly
SP1
RR+
RR–
RL+
RL–
FL+
FL–
FR+
FR–
IG1
11
22
9
20
7
31
32
18
5
16
V
W
B
W
B
R
G
P
L
Rear Speed Sensors
Front Speed Sensors
20 AL11
(IG)
10A
ECU–IG
NO. 2
2
26 2C
B
1 C
2 C
A74(C)
Junction Connector
B
BR
(∗2)
BR
(∗1)
∗ 1 : Before Nov. 2014 Production
∗ 2 : From Nov. 2014 Production
∗ 5 : Before May 2016 Production
∗ 6 : From May 2016 Production
BR
(∗1)
V(∗5)
SB(∗1)
G(∗1)
V(∗6)
BR(∗2)

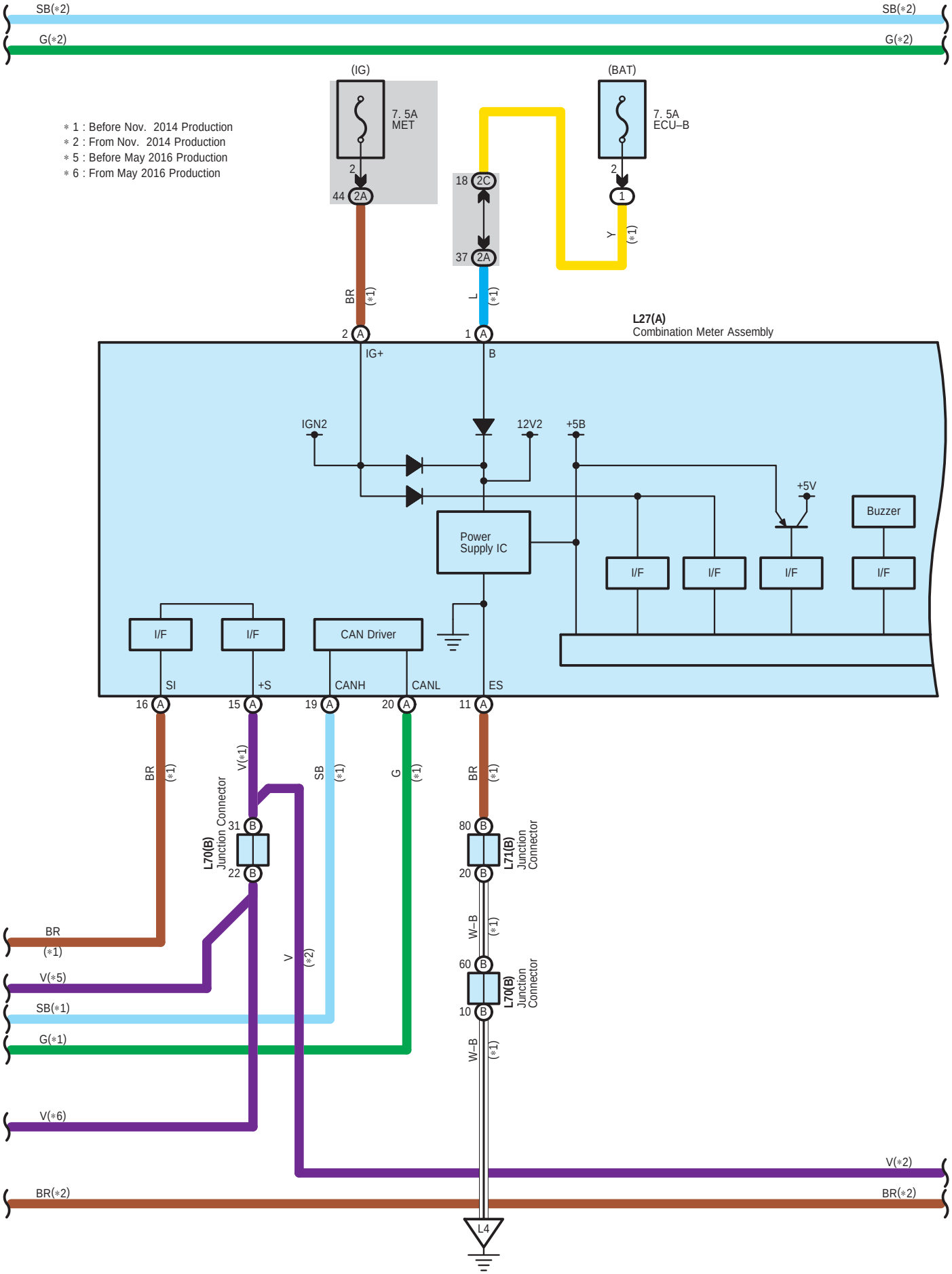
SB(∗2)
G(∗2)
∗1 : Before Nov. 2014 Production
∗2 : From Nov. 2014 Production
∗5 : Before May 2016 Production
∗6 : From May 2016 Production
(IG)
7. 5A
MET
(BAT)
7. 5A
ECU–B
L27(A)
Combination Meter Assembly
IG+
B
IGN2
12V2
+5B
+5V
Buzzer
Power
Supply IC
I/F
CAN Driver
SI
+S
CANH
CANL
ES
L70(B)
Junction Connector
L71(B)
Junction Connector
W–B
V(∗5)
SB(∗1)
G(∗1)
V(∗6)
V(∗2)
BR(∗2)
L4

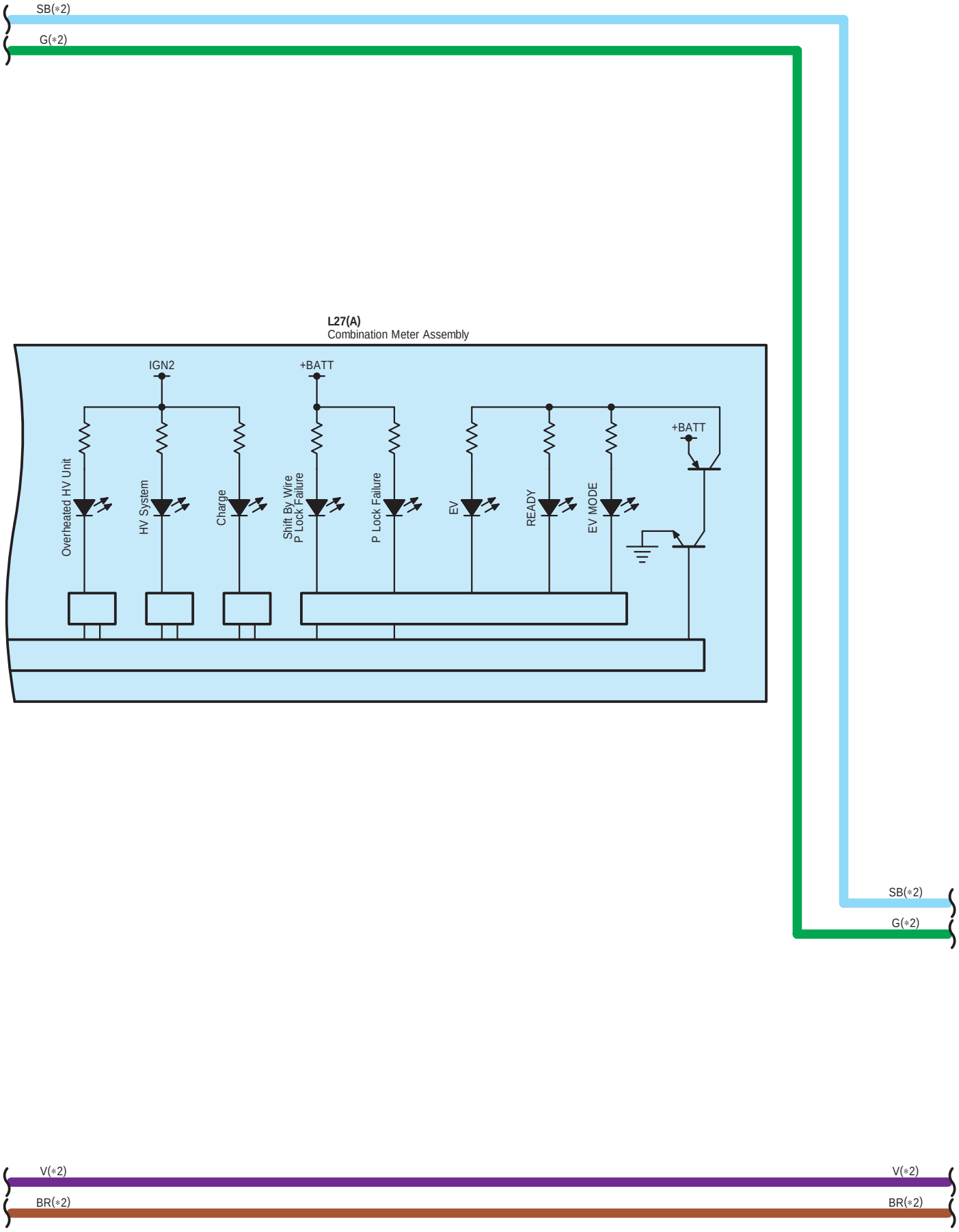
SB(*2)
G(*2)
L27(A)
Combination Meter Assembly
IGN2
+BATT
+BATT
Overheated HV Unit
HV System
Charge
Shift By Wire
P Lock Failure
P Lock Failure
EV
READY
EV MODE
SB(*2)
G(*2)
V(*2)
V(*2)
BR(*2)
BR(*2)

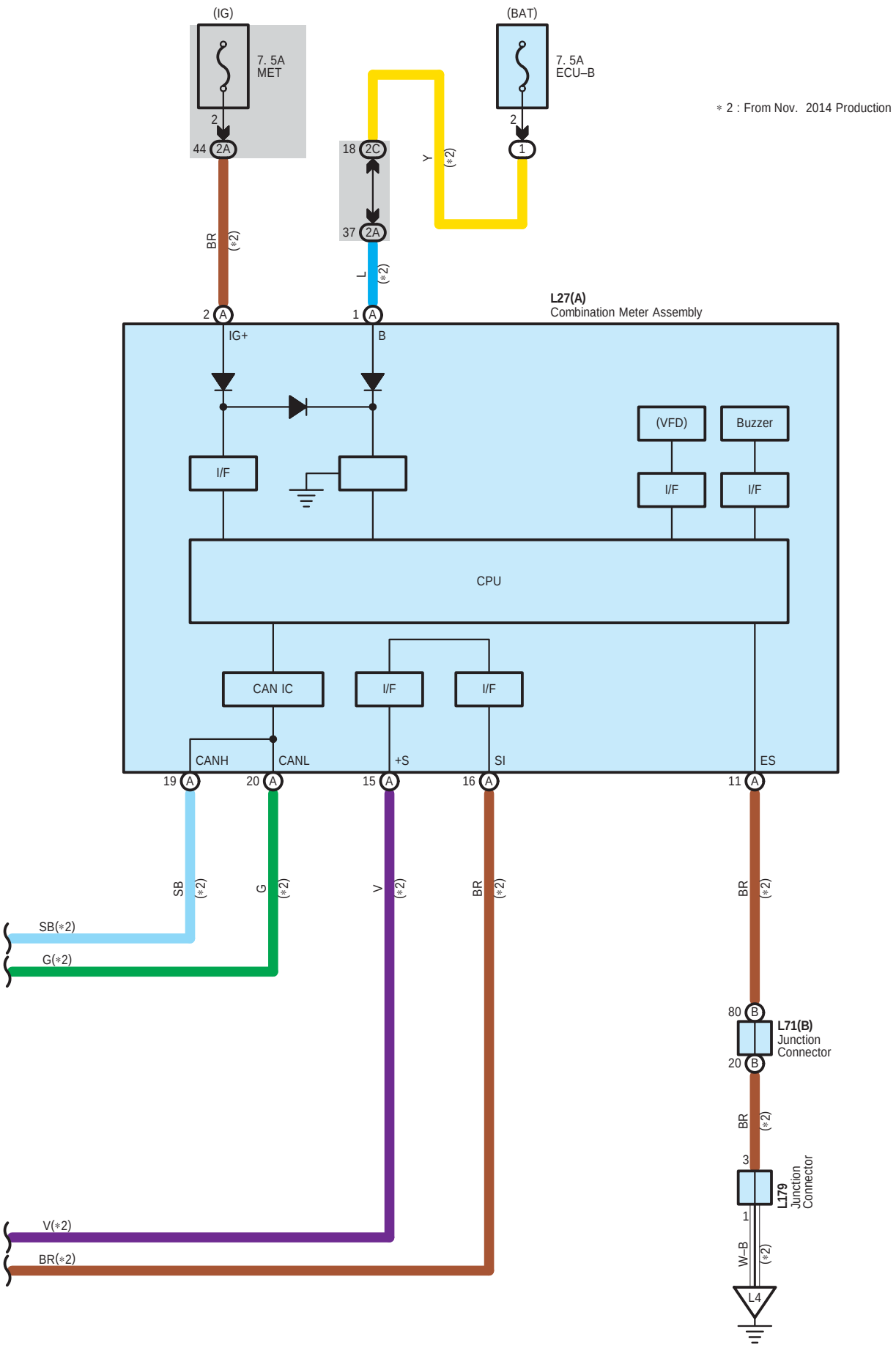
(IG)
7. 5A
MET
2
44 2A
BR
(*2)
(BAT)
7. 5A
ECU–B
2
1
18 2C
Y
(*2)
37 2A
L
(*2)
* 2 : From Nov. 2014 Production
L27(A)
Combination Meter Assembly
2 A
IG+
1 A
B
I/F
(VFD)
Buzzer
I/F
I/F
CPU
CAN IC
I/F
I/F
CANH
CANL
+S
SI
ES
19 A
20 A
15 A
16 A
11 A
SB
(*2)
G
(*2)
V
(*2)
BR
(*2)
BR
(*2)
SB(*2)
G(*2)
80 B
L71(B)
Junction
Connector
20 B
BR
(*2)
3
L179
Junction
Connector
1
W–B
(*2)
L4
V(*2)
BR(*2)

A 17
Gray

A 18
White

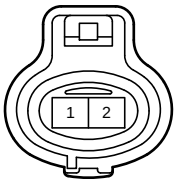

A 21
Gray

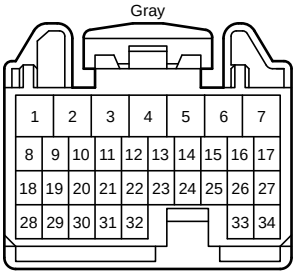

A 22
Gray

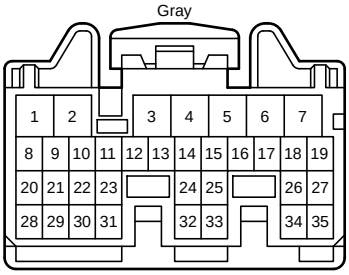

A 23
White

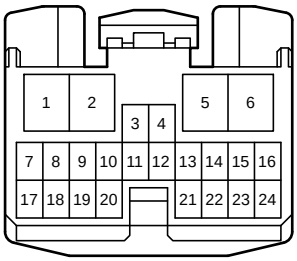

A 24
White

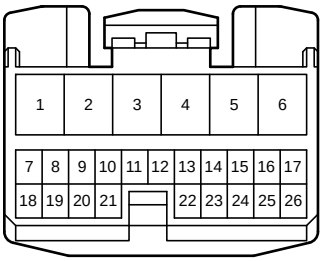

A 26
White

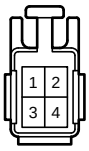

A 28
Black

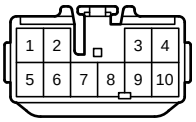

A 29
Black

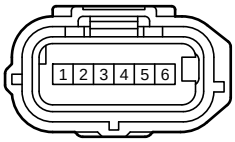

A 30
Black

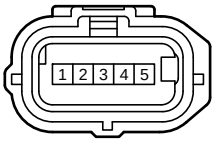

A 32
Black

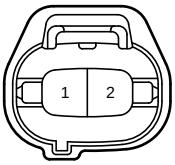

A 50
White

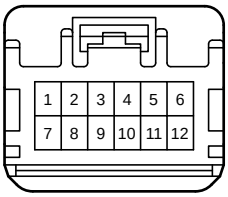

A 51
White

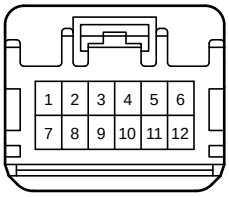

A 56
White

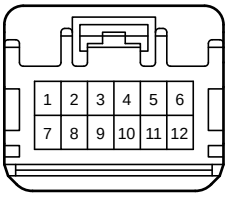

A 57
Black

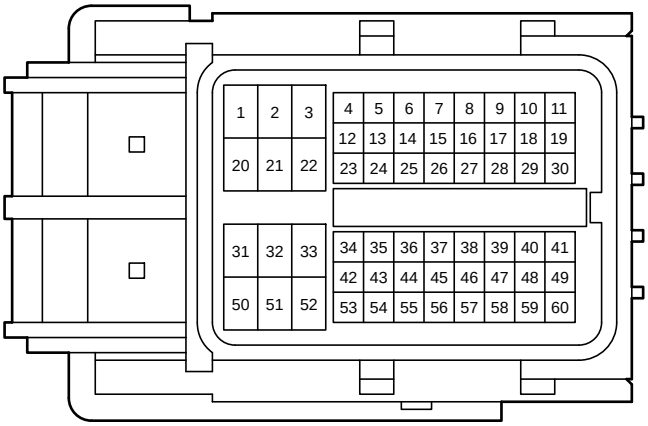

A 58
Gray

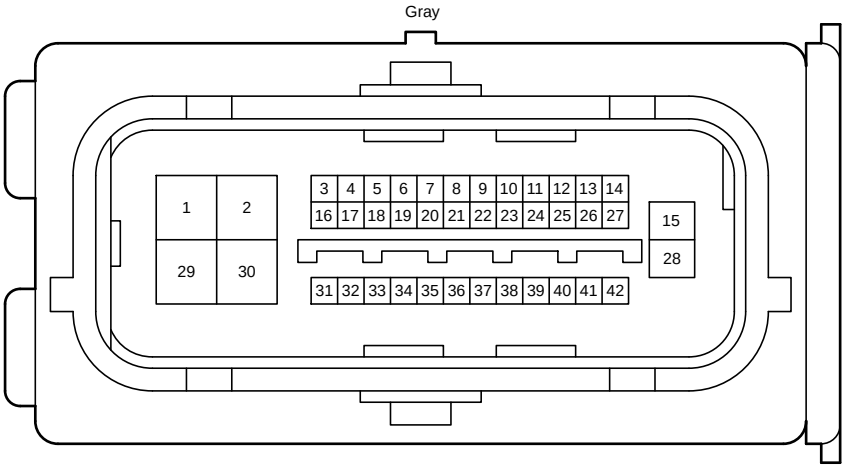

A 59
Black

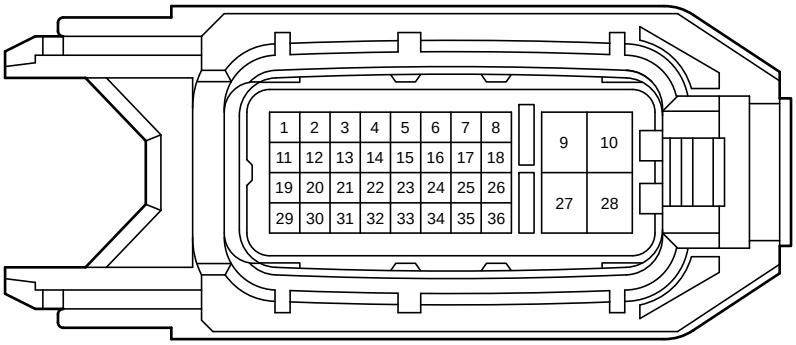

A 67
Blue

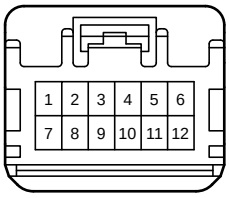

A 68
Gray

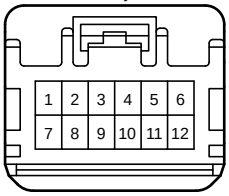

A 72
Black

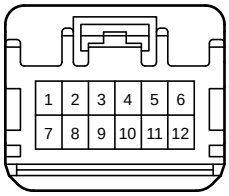

A 73
Black

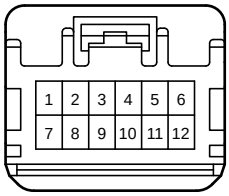

A 74
Black

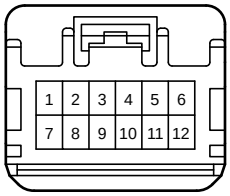

A 79
Black

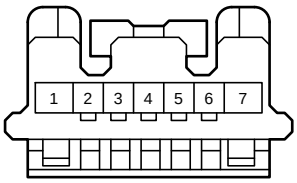

A 80
Blue

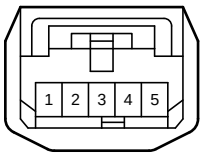

A 81
Black

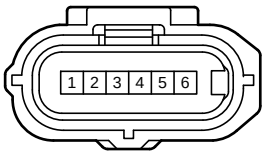

B 1

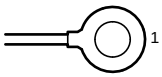

D 1
Black

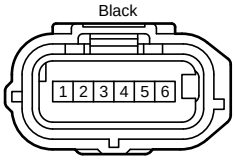

D 2
Black

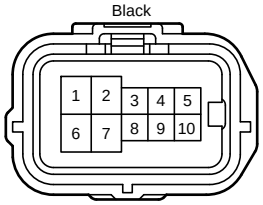

D 4
Black

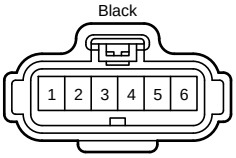

D 7
Gray

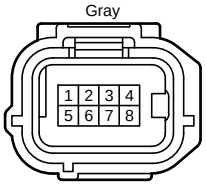

D 8
Black

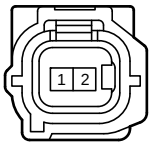

D 27
Black

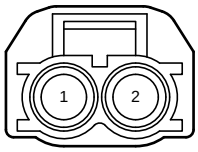

D 28
Black

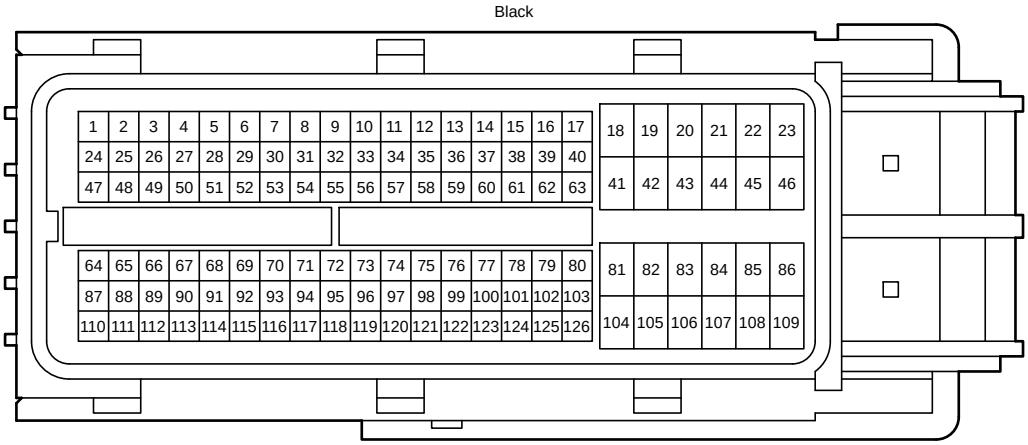

D 29
Black

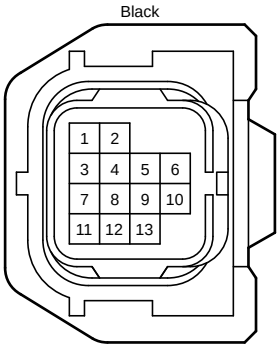

E 1
Orange

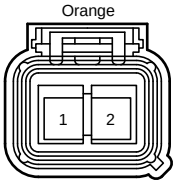

E 3
White

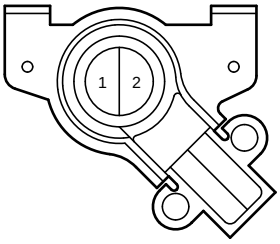

L 5
Gray

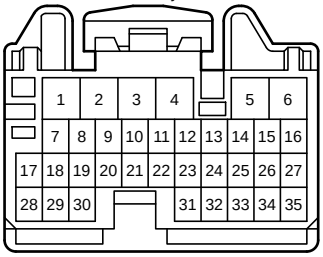

L 6
Gray

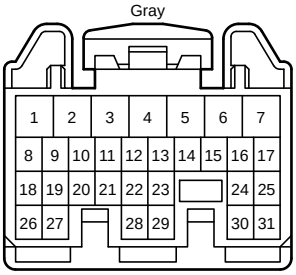

L 16
Yellow

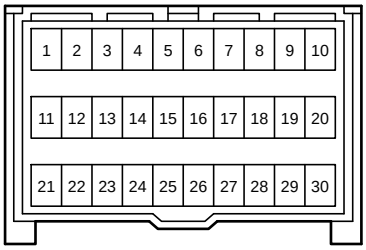

L 17
White

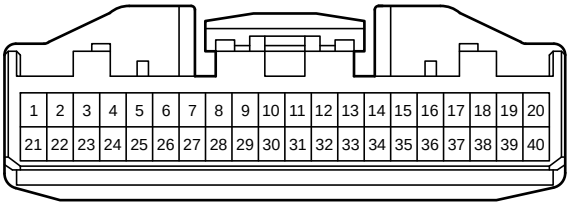

L 27
White

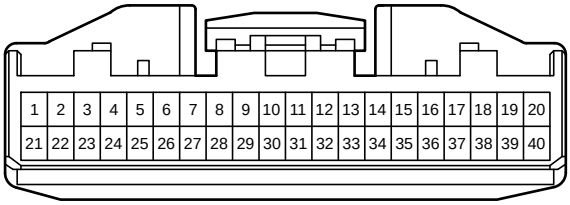

L 61
White

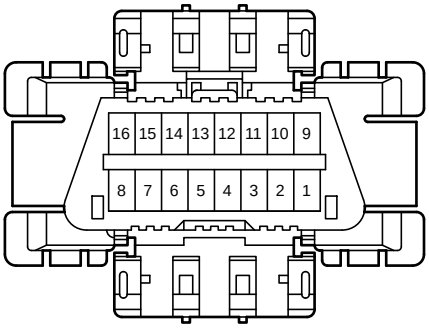

L 62

White

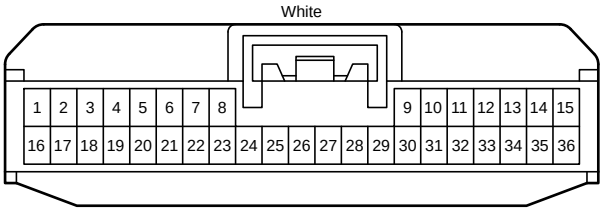

L 70

White

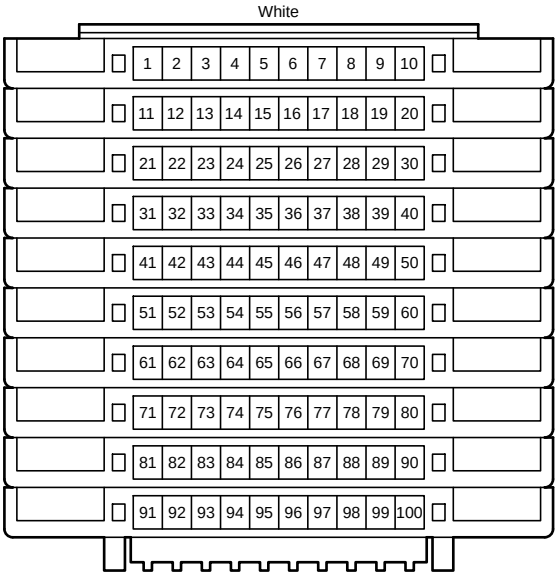

L 71

White

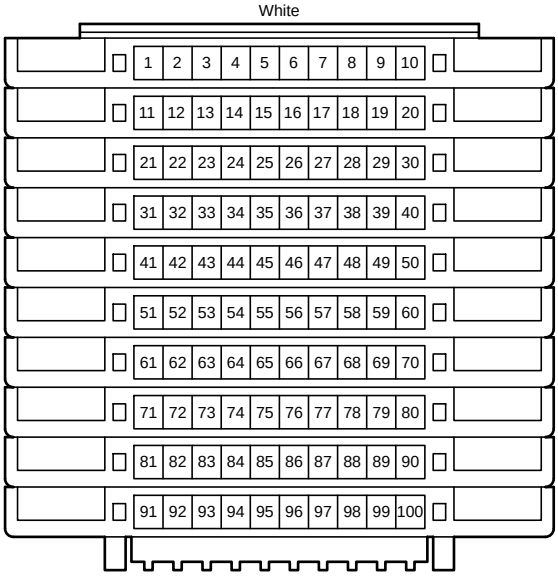

L 87

White

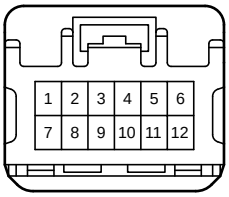

L 92

White

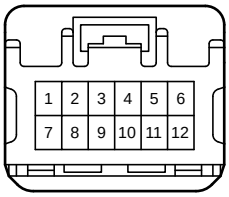

L 94

White

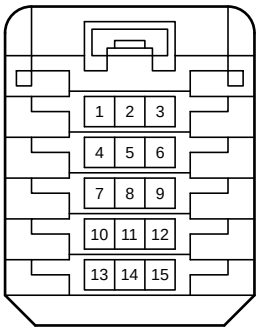

L 95

White

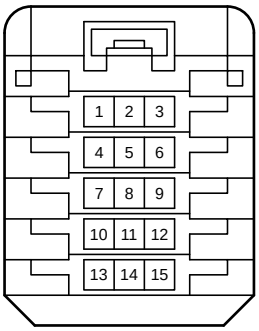

L101

White

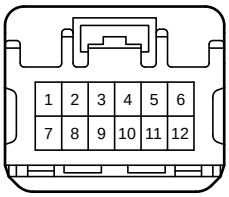

L102

White

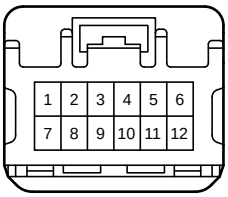

L124
Black

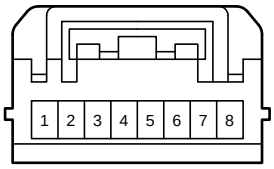

L126
White

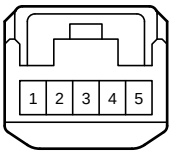

L127
Black

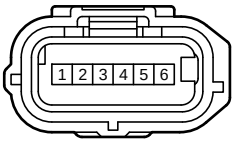

L132
Blue

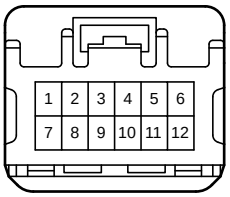

L133
Gray

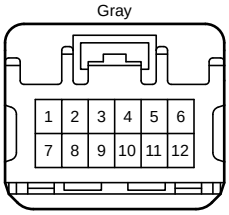

L143
White

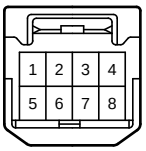

L144
White

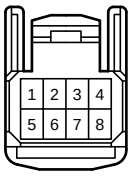

L179
Black

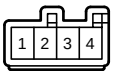

L195
White

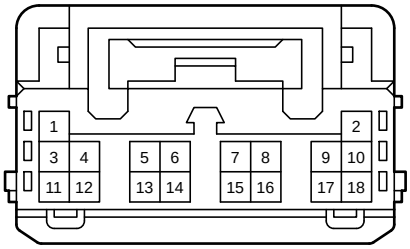

L197
White

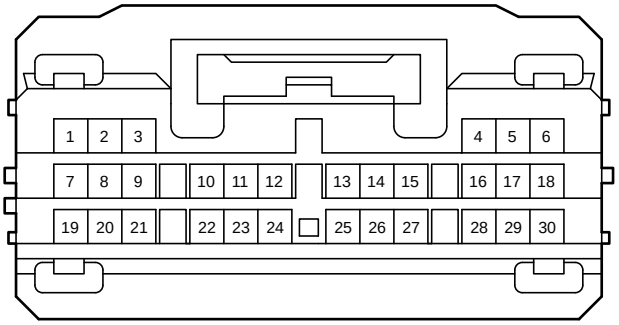

L200
Black

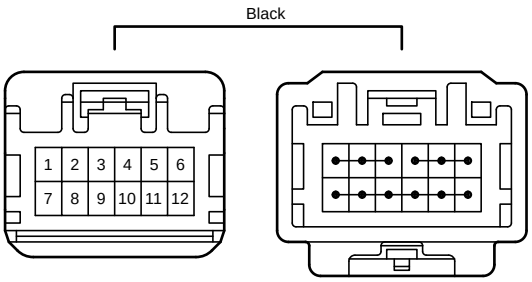

S 17
Black

S 30
White

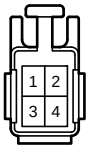

S 36
Black

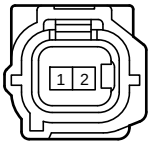

T 1
White

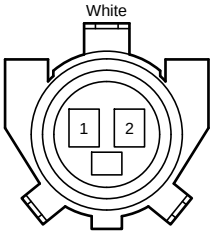

T 5

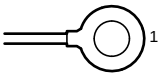

T 6

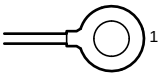

c 5
White

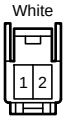

c 6
White

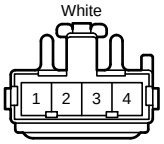

e 1
Orange

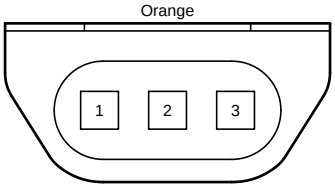

e 2
Black

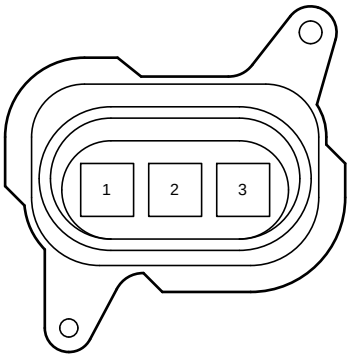

f 1
Orange

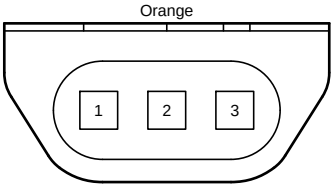

f 2
Black

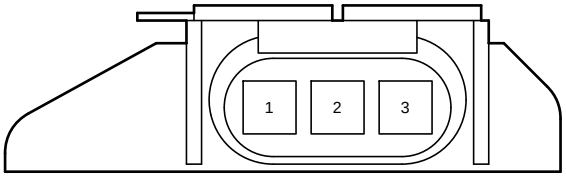

g 1
Black

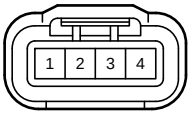

h 3
Orange

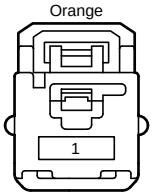

h 4

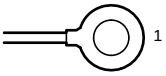

k 3
Orange

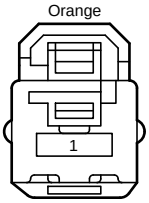

k 4

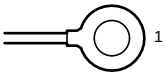

z 24
White

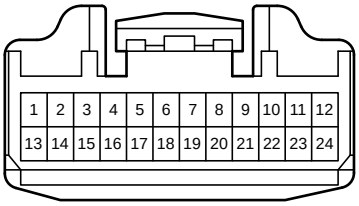

z 25
White

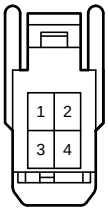

z 28
White

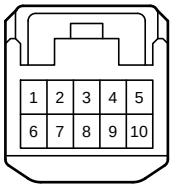

z 29
White

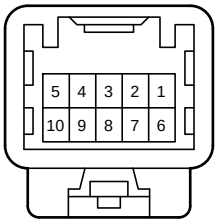

z 30
Orange

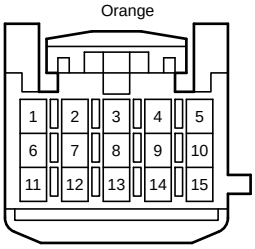

z 31
Orange

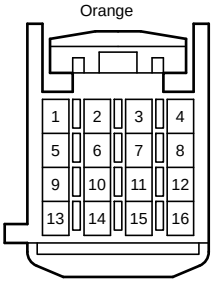

z 32
Orange

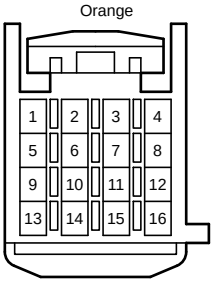

z 33
Orange

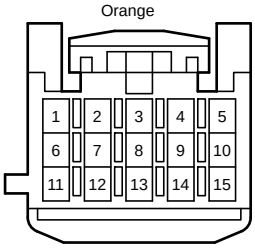

z 34
White

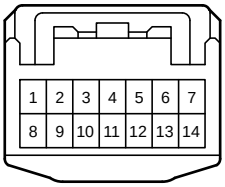

z 35
White

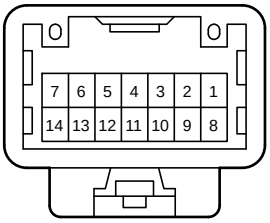

1A
White

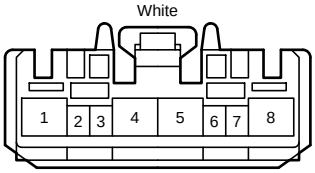

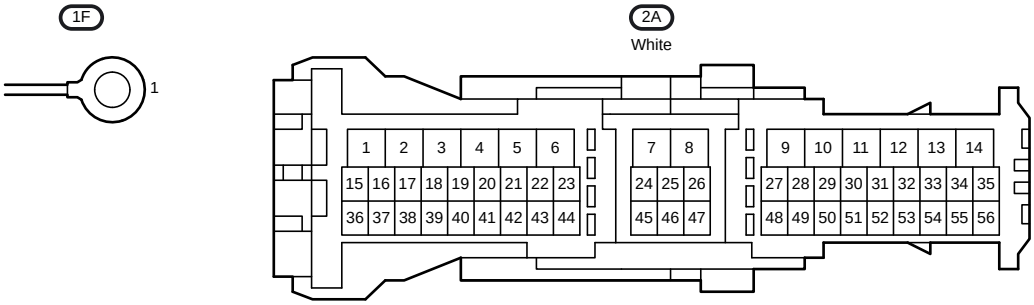
1F
1
2A
White
1 2 3 4 5 6 7 8 9 10 11 12 13 14
15 16 17 18 19 20 21 22 23 24 25 26 27 28 29 30 31 32 33 34 35
36 37 38 39 40 41 42 43 44 45 46 47 48 49 50 51 52 53 54 55 56

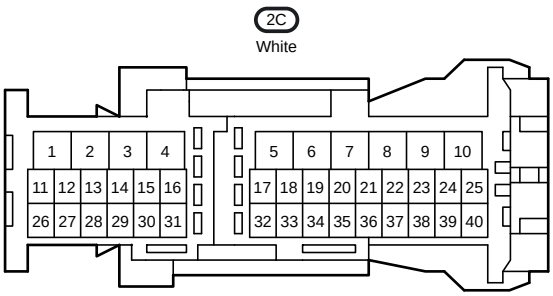
2C
White
1 2 3 4 5 6 7 8 9 10
11 12 13 14 15 16 17 18 19 20 21 22 23 24 25
26 27 28 29 30 31 32 33 34 35 36 37 38 39 40

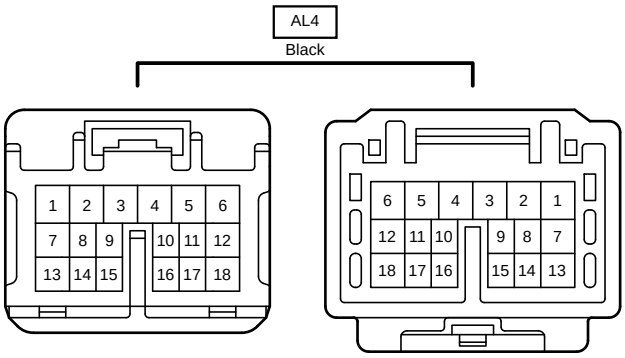
AL4
Black
1 2 3 4 5 6
7 8 9 10 11 12
13 14 15 16 17 18
6 5 4 3 2 1
12 11 10 9 8 7
18 17 16 15 14 13

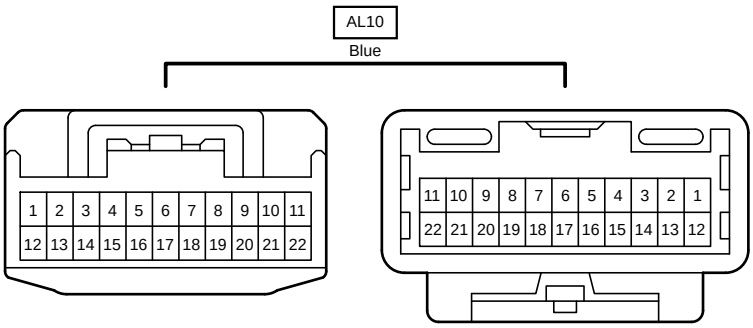
AL10
Blue
1 2 3 4 5 6 7 8 9 10 11
12 13 14 15 16 17 18 19 20 21 22
11 10 9 8 7 6 5 4 3 2 1
22 21 20 19 18 17 16 15 14 13 12

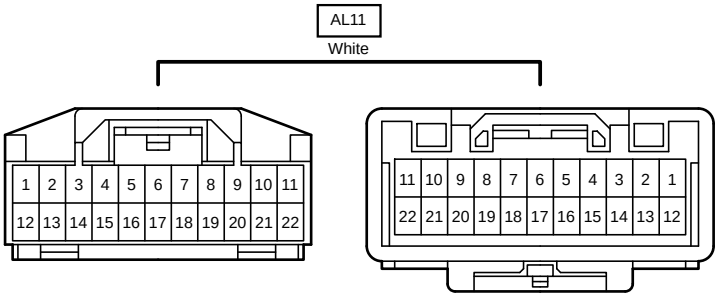
AL11
White
1 2 3 4 5 6 7 8 9 10 11
12 13 14 15 16 17 18 19 20 21 22
11 10 9 8 7 6 5 4 3 2 1
22 21 20 19 18 17 16 15 14 13 12

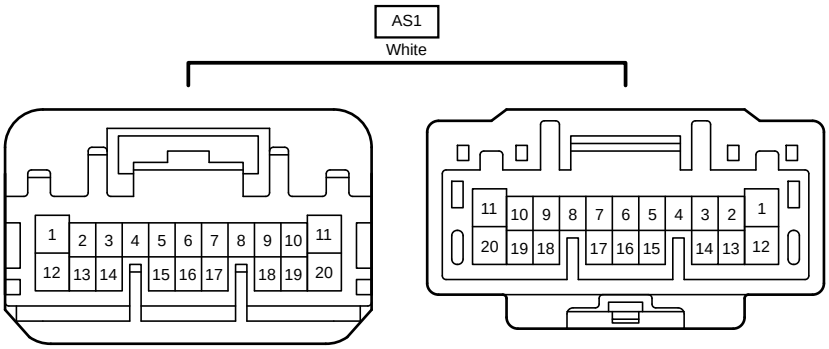
AS1
White
1 2 3 4 5 6 7 8 9 10 11
12 13 14 15 16 17 18 19 20
11 10 9 8 7 6 5 4 3 2 1
20 19 18 17 16 15 14 13 12

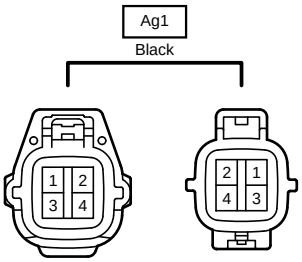
Ag1
Black
1 2
3 4
2 1
4 3

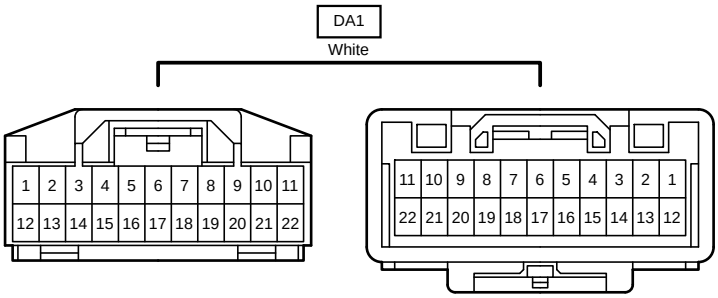
DA1
White
1 2 3 4 5 6 7 8 9 10 11
12 13 14 15 16 17 18 19 20 21 22
11 10 9 8 7 6 5 4 3 2 1
22 21 20 19 18 17 16 15 14 13 12

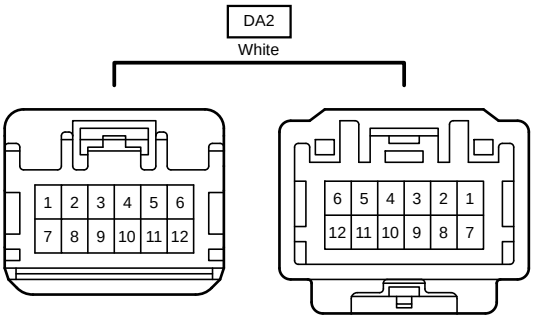
DA2
White
1 2 3 4 5 6
7 8 9 10 11 12
6 5 4 3 2 1
12 11 10 9 8 7

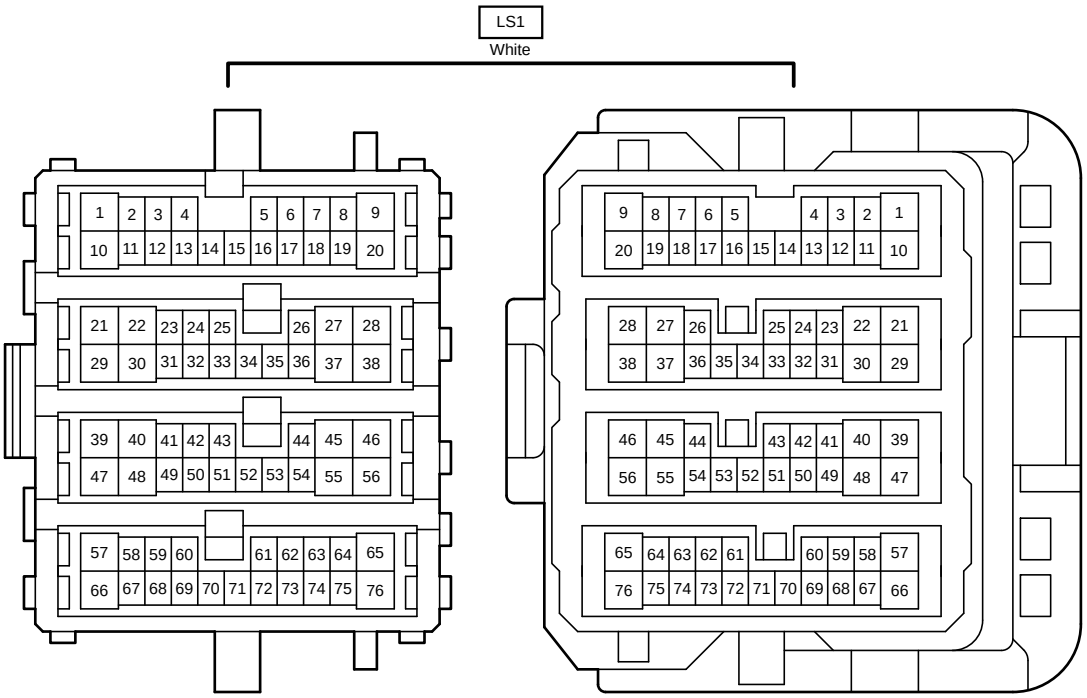
LS1
White
1 2 3 4 5 6 7 8 9
10 11 12 13 14 15 16 17 18 19 20
21 22 23 24 25 26 27 28
29 30 31 32 33 34 35 36 37 38
39 40 41 42 43 44 45 46
47 48 49 50 51 52 53 54 55 56
57 58 59 60 61 62 63 64 65
66 67 68 69 70 71 72 73 74 75 76
9 8 7 6 5 4 3 2 1
20 19 18 17 16 15 14 13 12 11 10
28 27 26 25 24 23 22 21
38 37 36 35 34 33 32 31 30 29
46 45 44 43 42 41 40 39
56 55 54 53 52 51 50 49 48 47
65 64 63 62 61 60 59 58 57
76 75 74 73 72 71 70 69 68 67 66

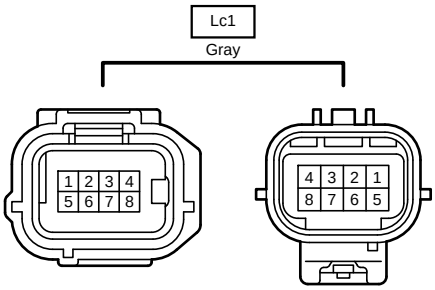
Lc1
Gray
1 2 3 4
5 6 7 8
4 3 2 1
8 7 6 5