(Cont. next page)

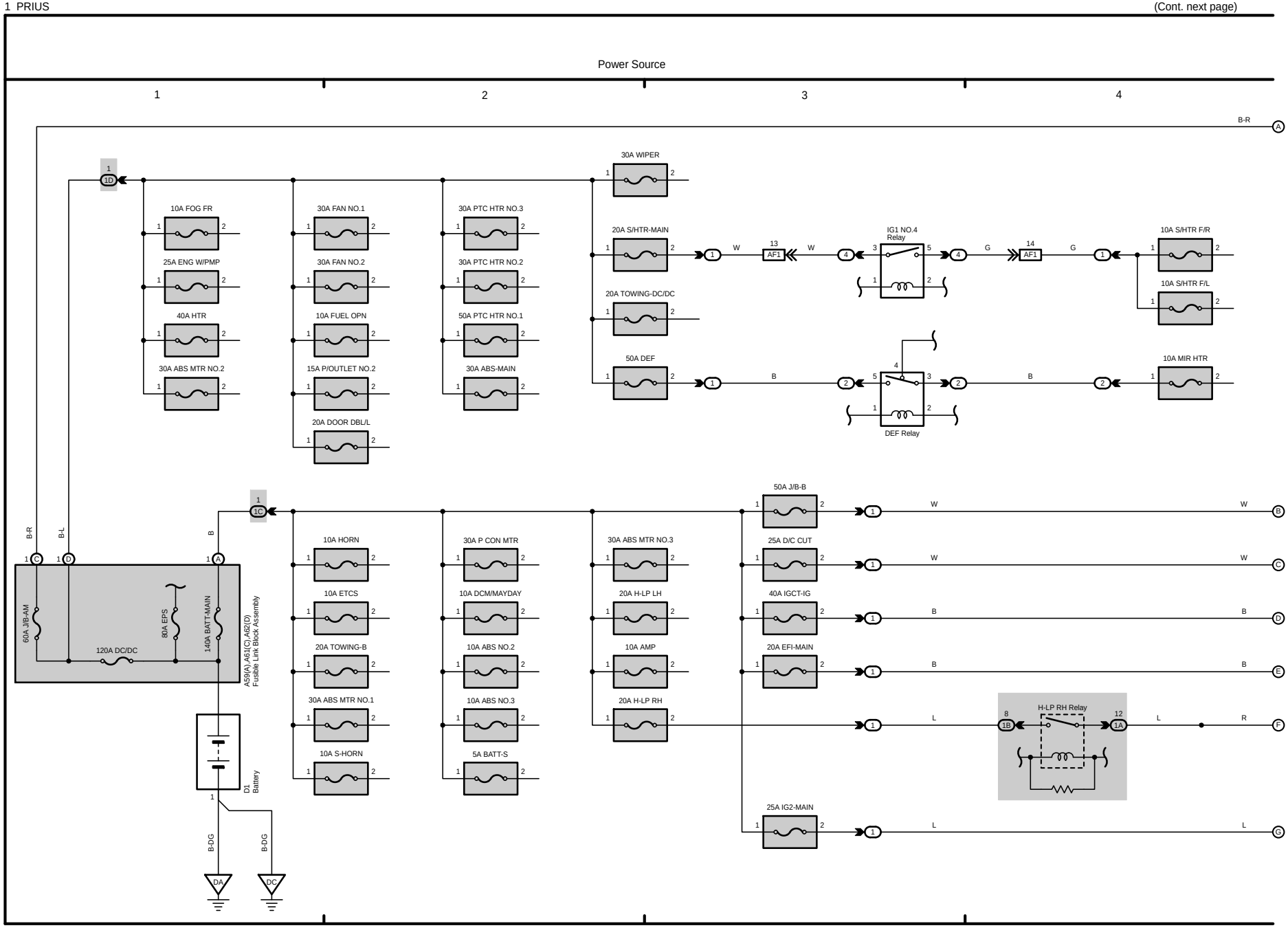

(Cont. next page)

Power Source

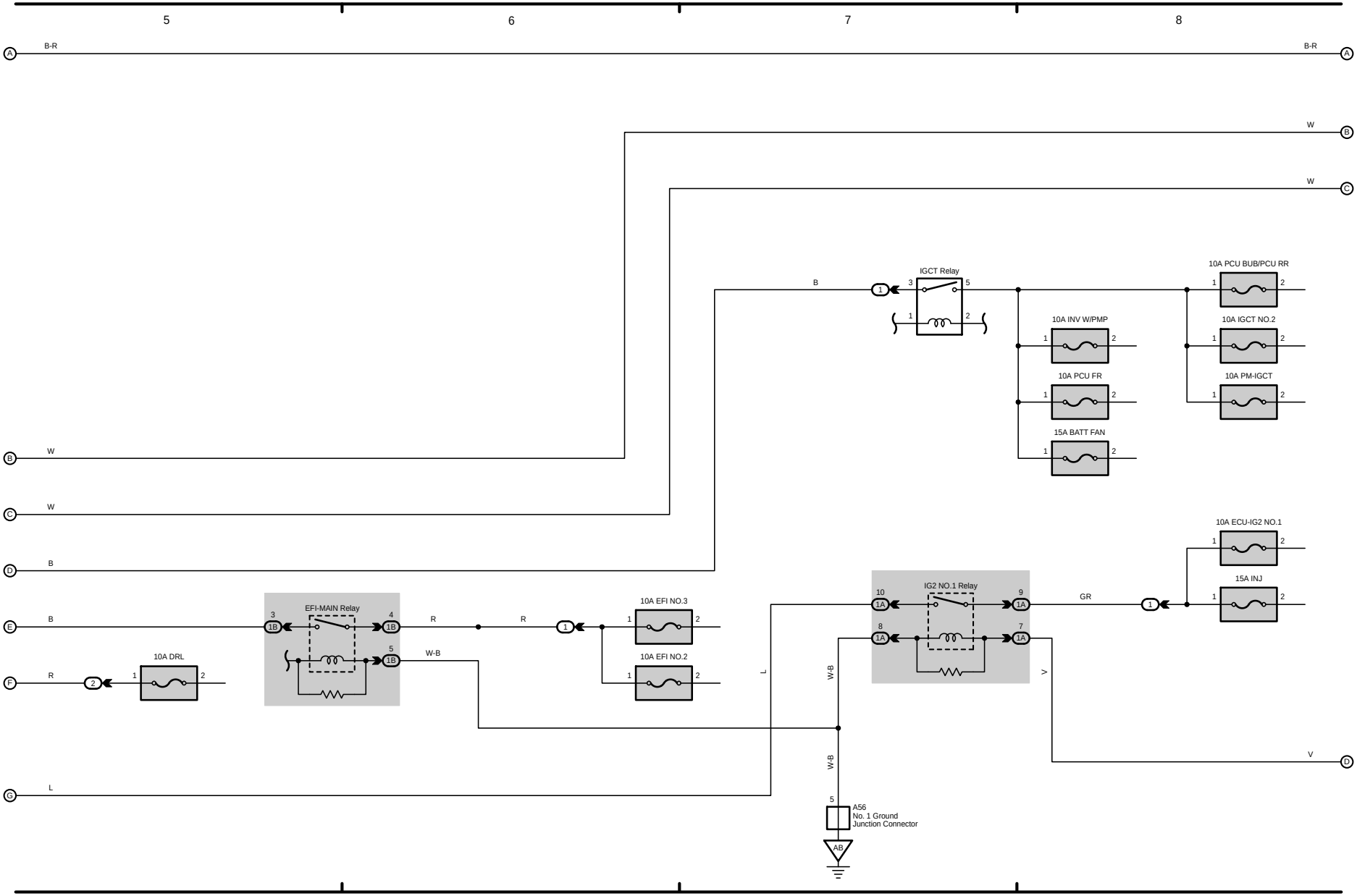

(Cont. next page)

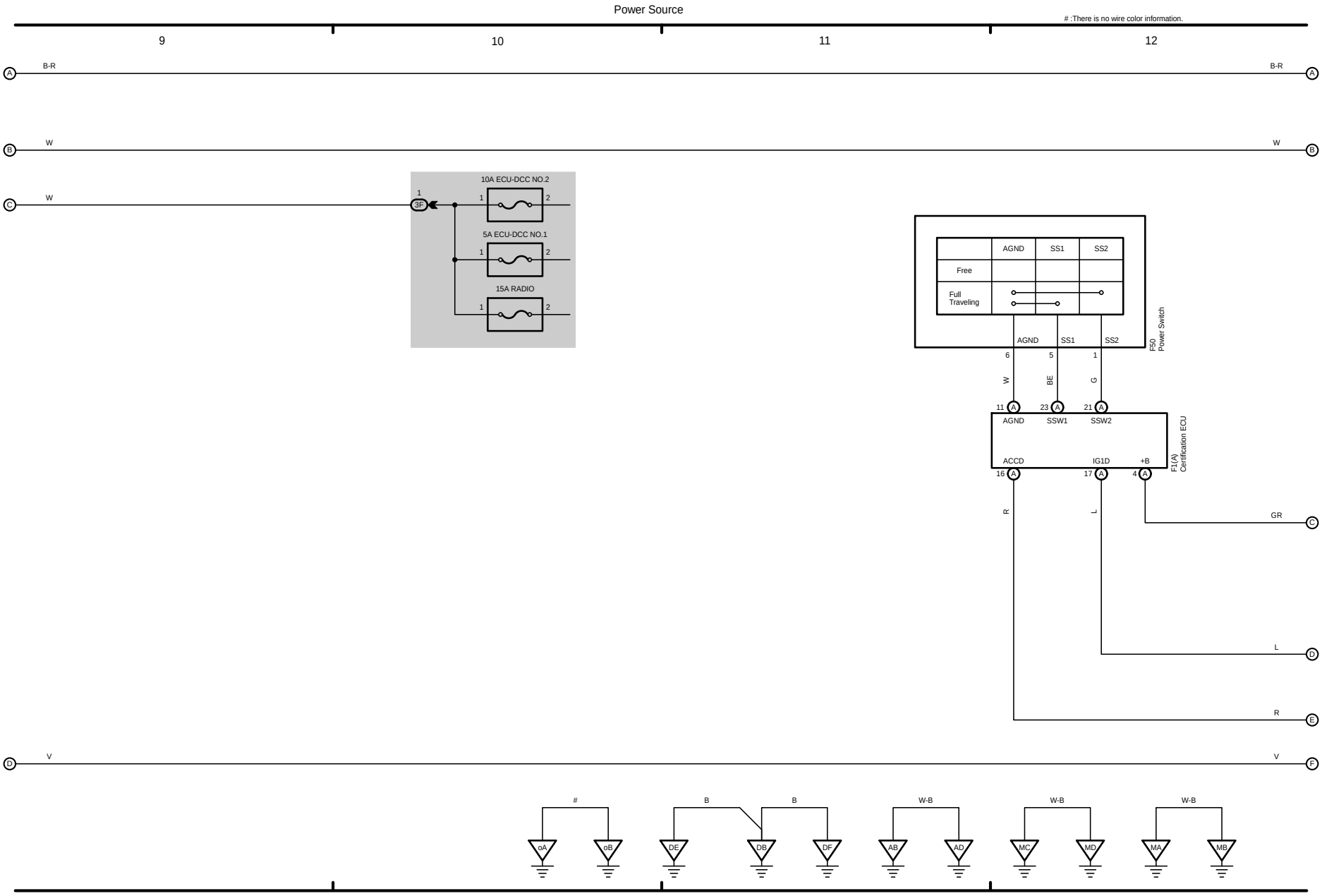
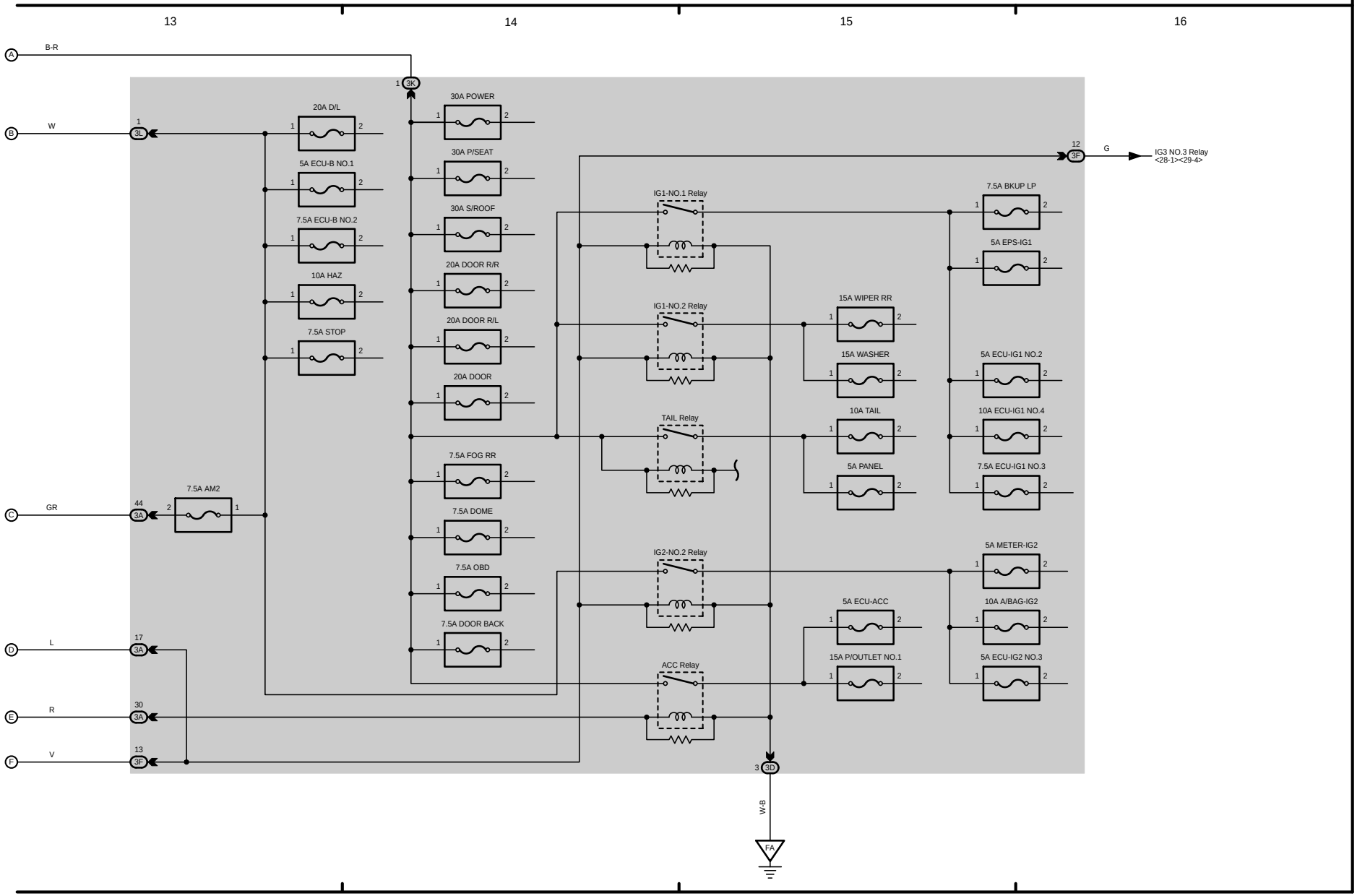
Power Source