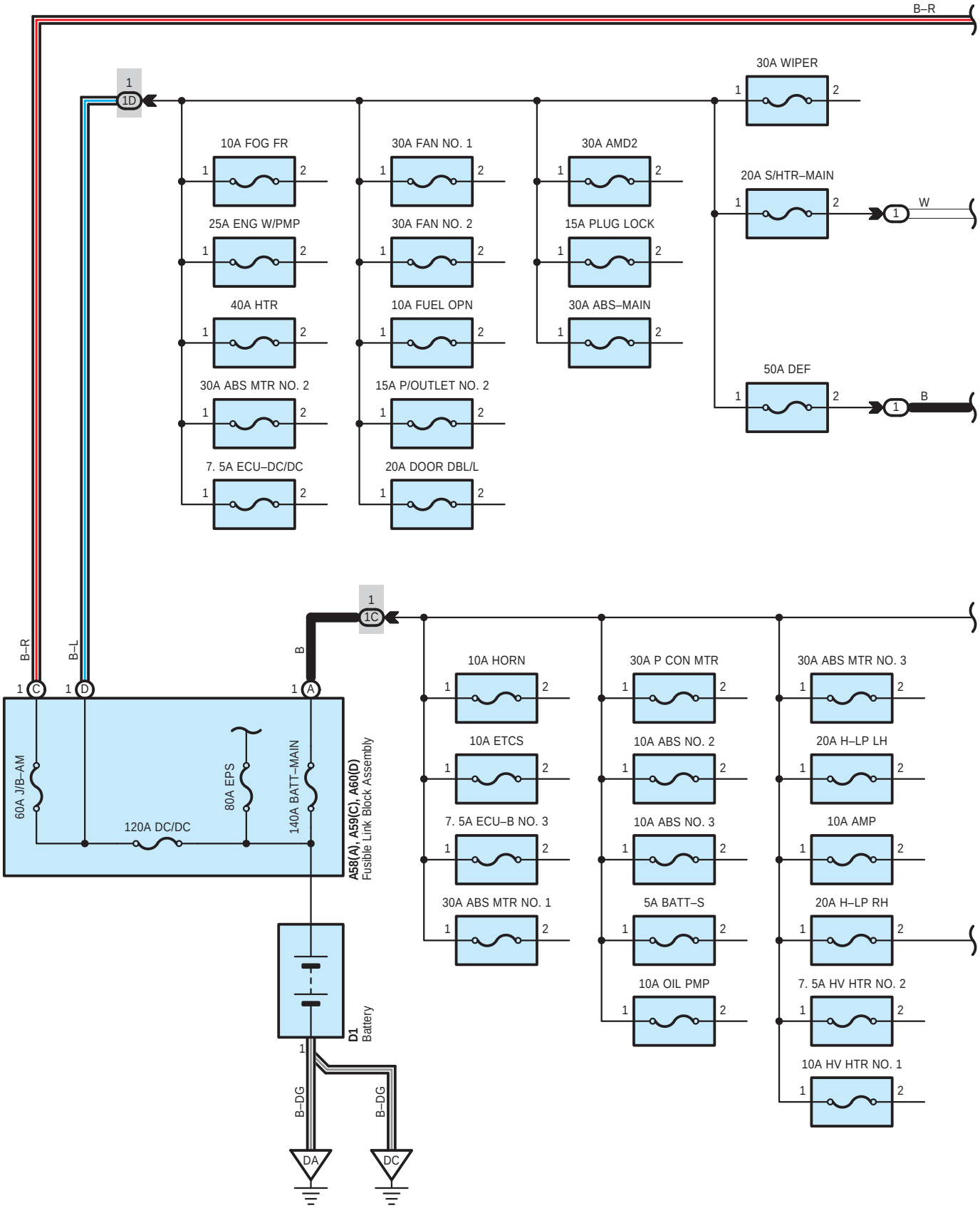
B–R
1
1D
30A WIPER
10A FOG FR
30A FAN NO. 1
30A AMD2
20A S/HTR–MAIN
W
25A ENG W/PMP
30A FAN NO. 2
15A PLUG LOCK
40A HTR
10A FUEL OPN
30A ABS–MAIN
50A DEF
B
30A ABS MTR NO. 2
15A P/OUTLET NO. 2
7. 5A ECU–DC/DC
20A DOOR DBL/L
1
1C
B–R
B–L
B
1 C
1 D
1 A
60A J/B–AM
80A EPS
140A BATT–MAIN
120A DC/DC
A58(A), A59(C), A60(D)
Fusible Link Block Assembly
10A HORN
30A P CON MTR
30A ABS MTR NO. 3
10A ETCS
10A ABS NO. 2
20A H–LP LH
7. 5A ECU–B NO. 3
10A ABS NO. 3
10A AMP
30A ABS MTR NO. 1
5A BATT–S
20A H–LP RH
10A OIL PMP
7. 5A HV HTR NO. 2
10A HV HTR NO. 1
D1
Battery
1
B–DG
B–DG
DA
DC

∗ 1 : Korea

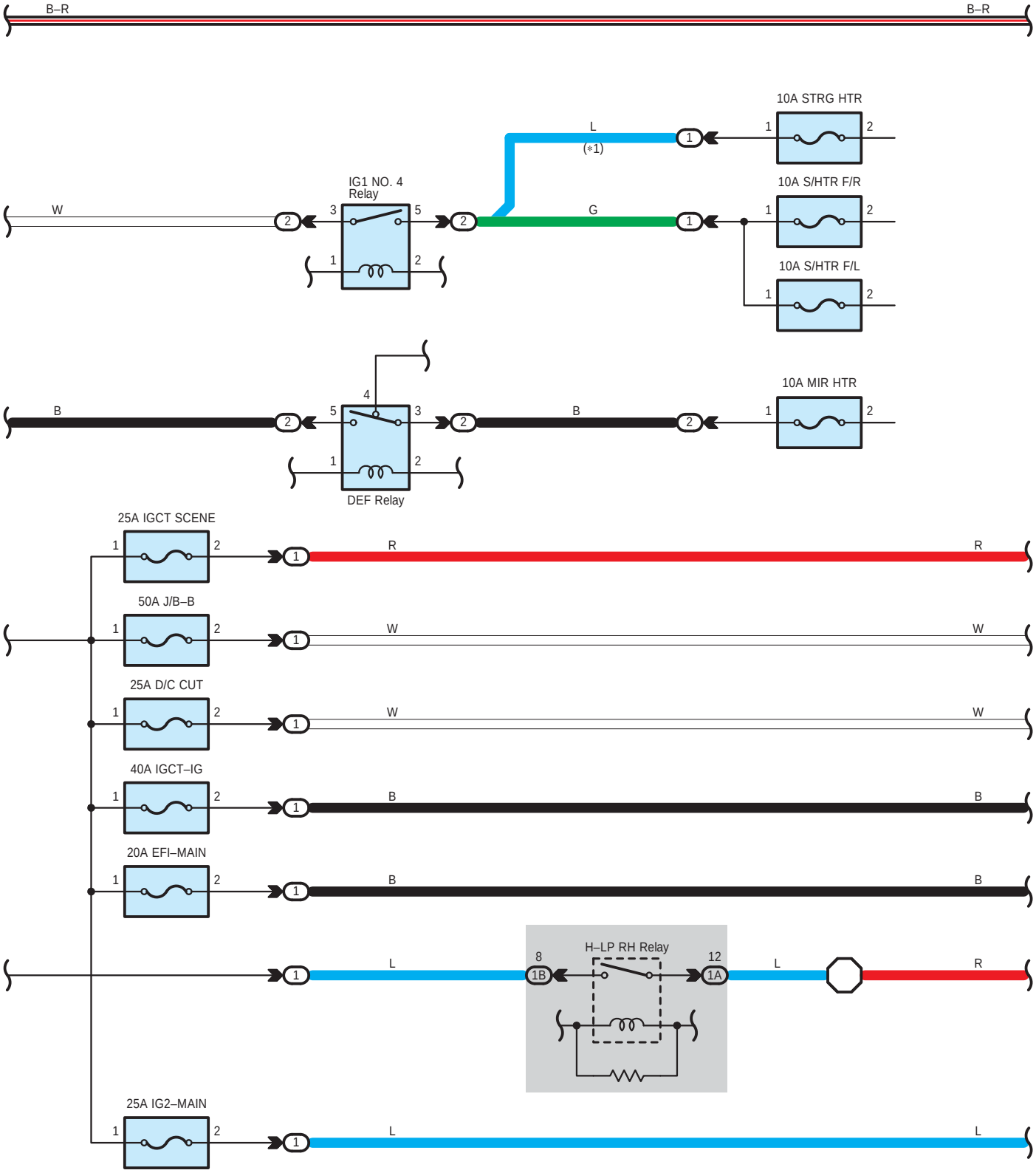
B–R
B–R
10A STRG HTR
L
(∗1)
IG1 NO. 4
Relay
W
G
10A S/HTR F/R
10A S/HTR F/L
B
B
10A MIR HTR
DEF Relay
25A IGCT SCENE
R
R
50A J/B–B
W
W
25A D/C CUT
W
W
40A IGCT–IG
B
B
20A EFI–MAIN
B
B
H–LP RH Relay
L
L
R
25A IG2–MAIN
L
L

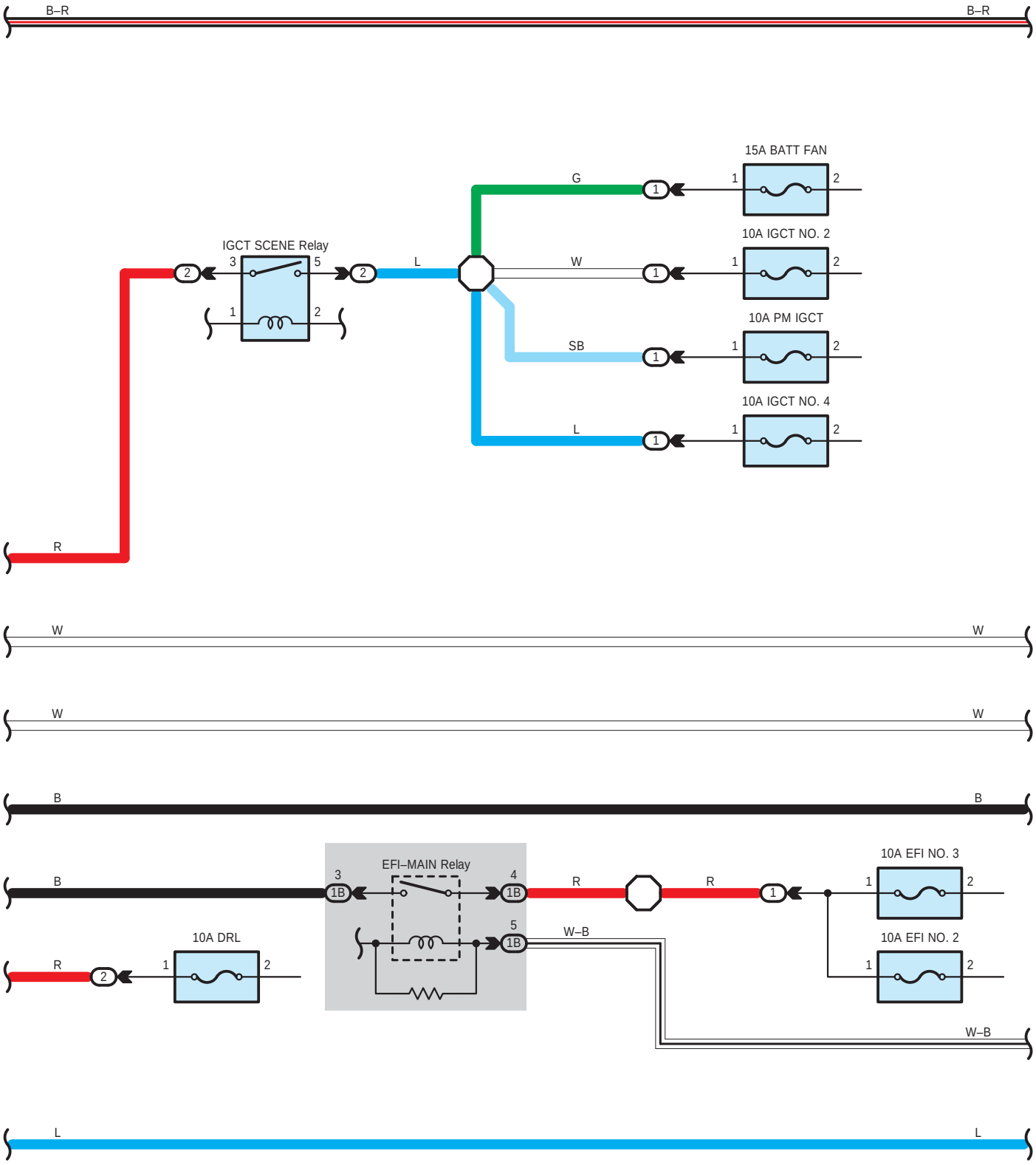
B–R
B–R
15A BATT FAN
G
1
2
IGCT SCENE Relay
3
5
2
L
W
10A IGCT NO. 2
1
2
10A PM IGCT
SB
10A IGCT NO. 4
L
R
W
W
W
W
B
B
B
EFI–MAIN Relay
3
1B
4
1B
R
R
10A EFI NO. 3
5
1B
W–B
10A DRL
R
10A EFI NO. 2
W–B
L
L

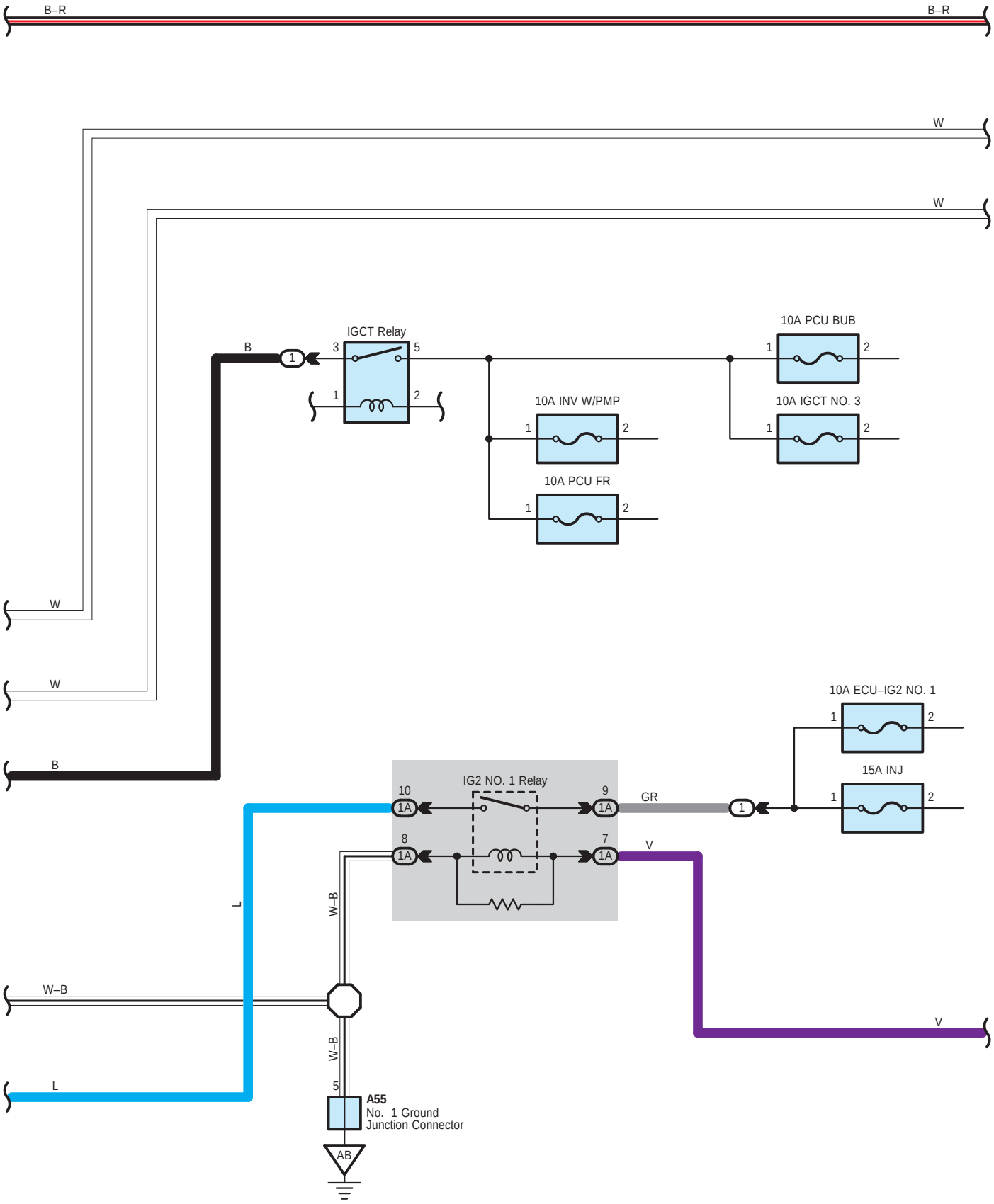
B–R
B–R
W
W
IGCT Relay
B
1
3
5
1
2
10A PCU BUB
1
2
10A INV W/PMP
1
2
10A IGCT NO. 3
1
2
10A PCU FR
1
2
W
W
B
10A ECU–IG2 NO. 1
1
2
15A INJ
1
2
IG2 NO. 1 Relay
10
1A
9
1A
GR
1
8
1A
7
1A
V
L
W–B
W–B
W–B
V
L
5
A55
No. 1 Ground
Junction Connector
AB

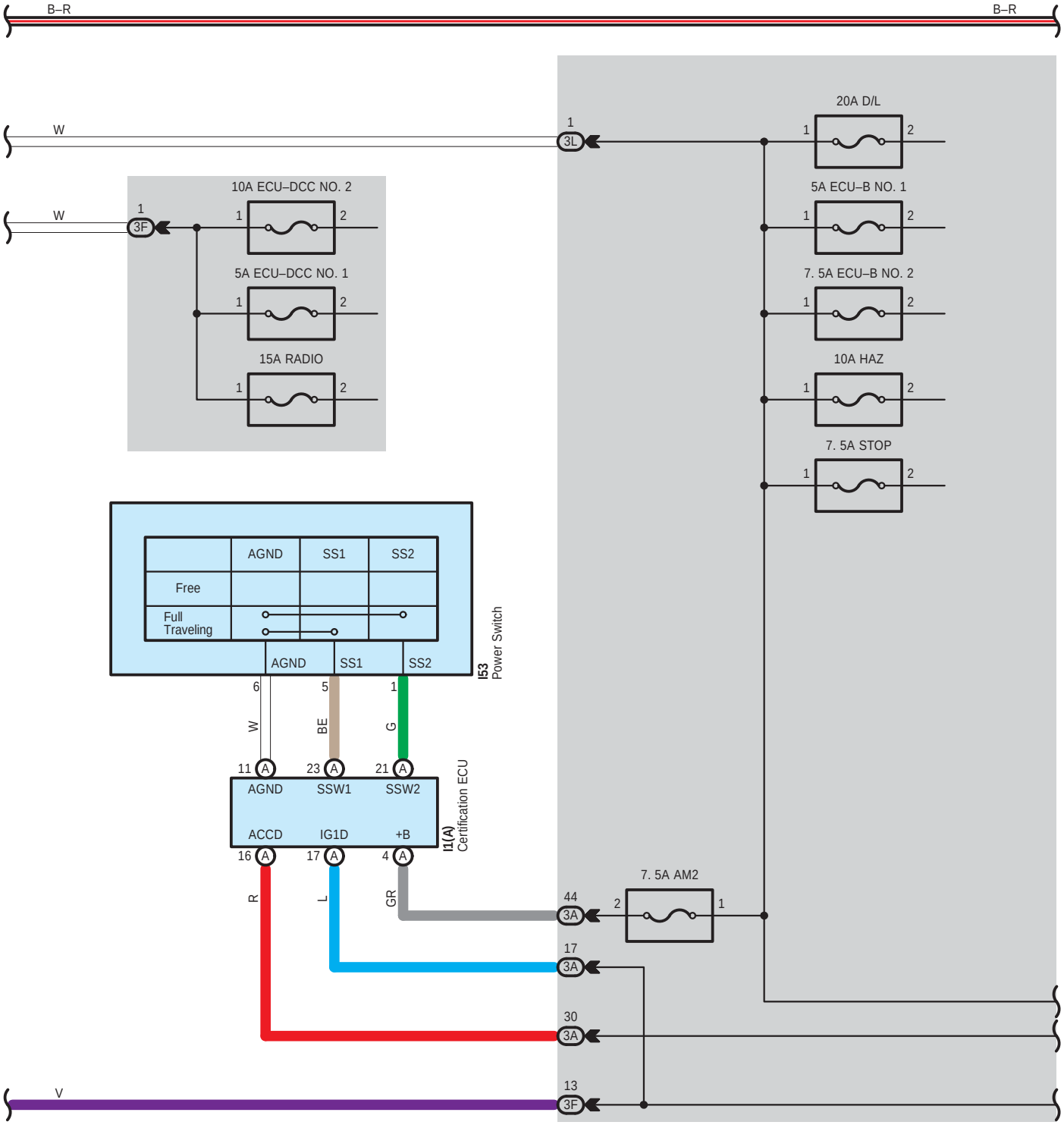
B–R
B–R
W
1
3L
20A D/L
1
2
W
1
3F
10A ECU–DCC NO. 2
1
2
5A ECU–DCC NO. 1
1
2
15A RADIO
1
2
5A ECU–B NO. 1
1
2
7. 5A ECU–B NO. 2
1
2
10A HAZ
1
2
7. 5A STOP
1
2
AGND
SS1
SS2
Free
Full Traveling
AGND
SS1
SS2
I53
Power Switch
6
5
1
W
BE
G
11 A
23 A
21 A
AGND
SSW1
SSW2
ACCD
IG1D
+B
I1(A)
Certification ECU
16 A
17 A
4 A
R
L
GR
7. 5A AM2
2
1
44
3A
17
3A
30
3A
V
13
3F

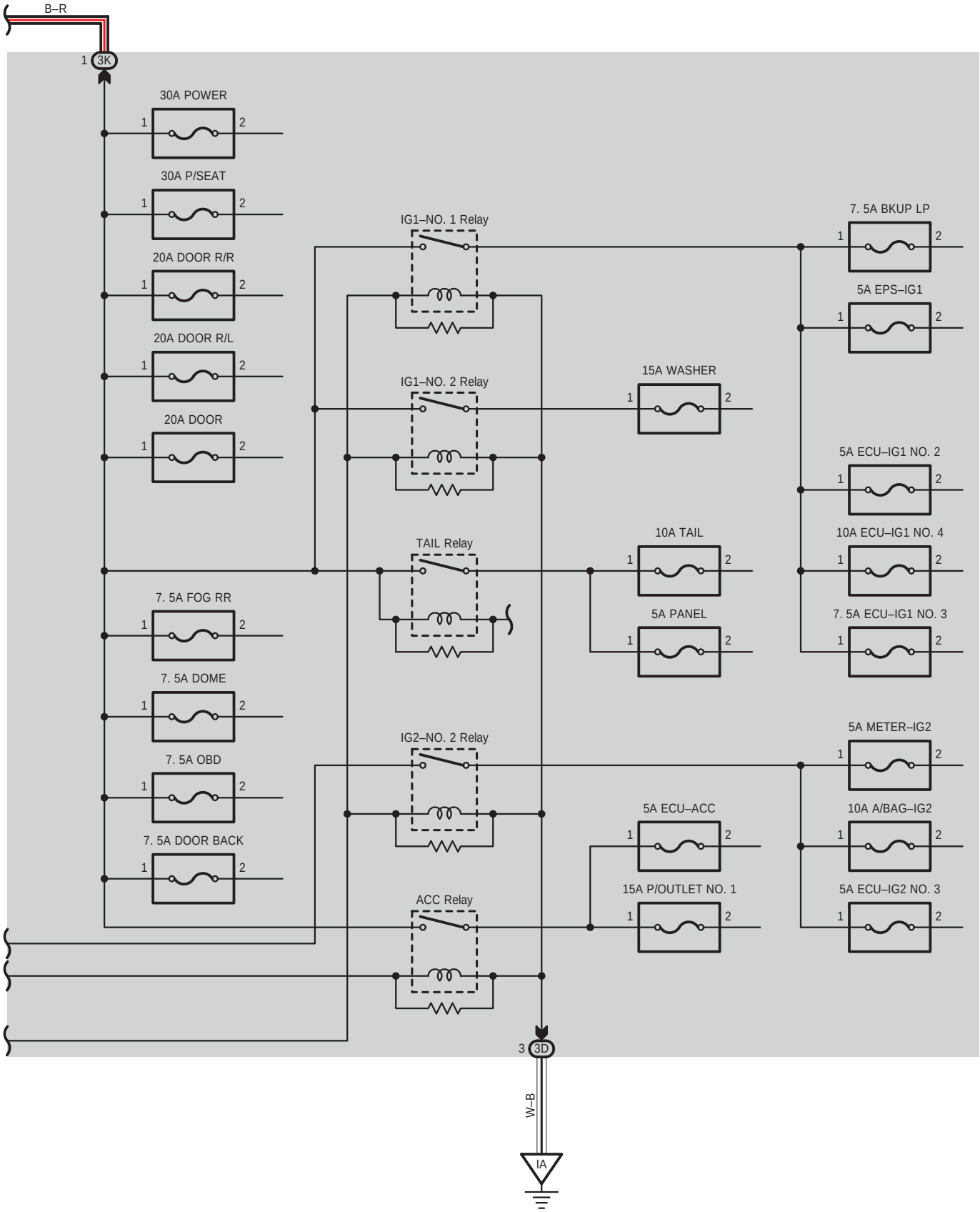
B–R
1 3K
30A POWER
30A P/SEAT
20A DOOR R/R
20A DOOR R/L
20A DOOR
7. 5A FOG RR
7. 5A DOME
7. 5A OBD
7. 5A DOOR BACK
IG1–NO. 1 Relay
IG1–NO. 2 Relay
TAIL Relay
IG2–NO. 2 Relay
ACC Relay
7. 5A BKUP LP
5A EPS–IG1
15A WASHER
5A ECU–IG1 NO. 2
10A TAIL
10A ECU–IG1 NO. 4
5A PANEL
7. 5A ECU–IG1 NO. 3
5A METER–IG2
5A ECU–ACC
10A A/BAG–IG2
15A P/OUTLET NO. 1
5A ECU–IG2 NO. 3
3 3D
W–B
IA

A55
Black

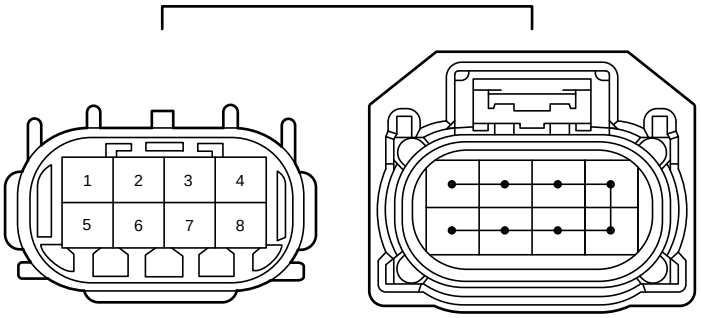

90980-12B56

A58

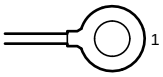

A59

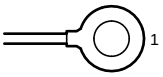

A60

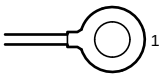

D1

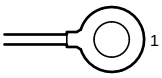

I1
White

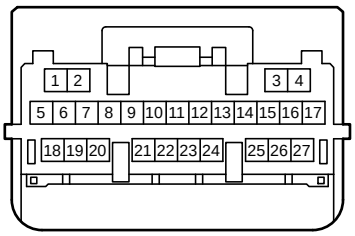

90980-12B78

I53
Black

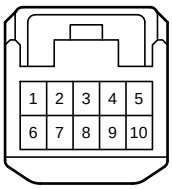

90980-12368

1A
Gray

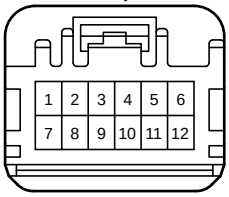

90980-12862

1B
White

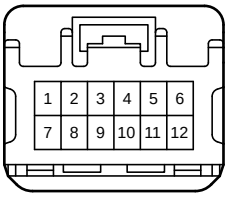

90980-12737

1C
Gray

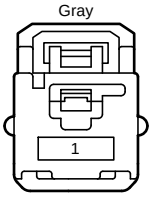

90980-12756

1D
White

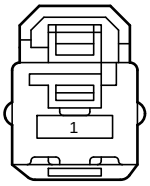

90980-12796

3A
White

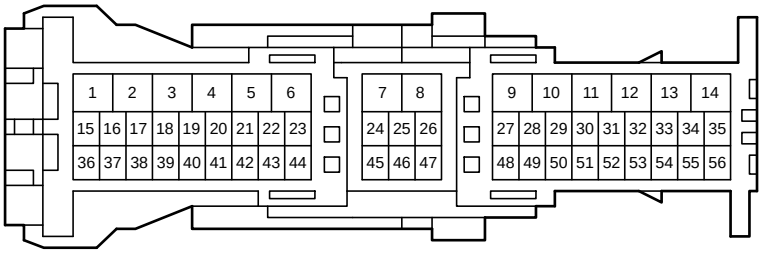

90980-12943

3D
White

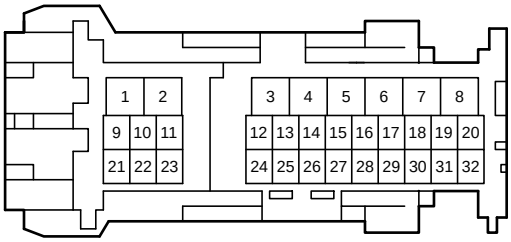

90980-12A48

3F
White

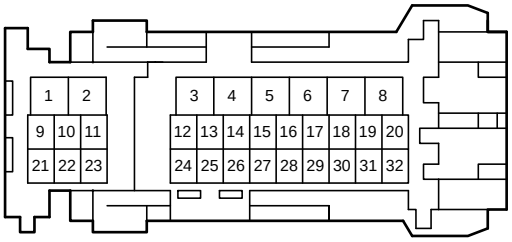

90980-12A47

3K
White

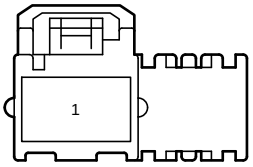

82824-74010

3L
White

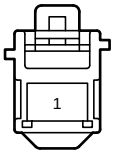

90980-10995