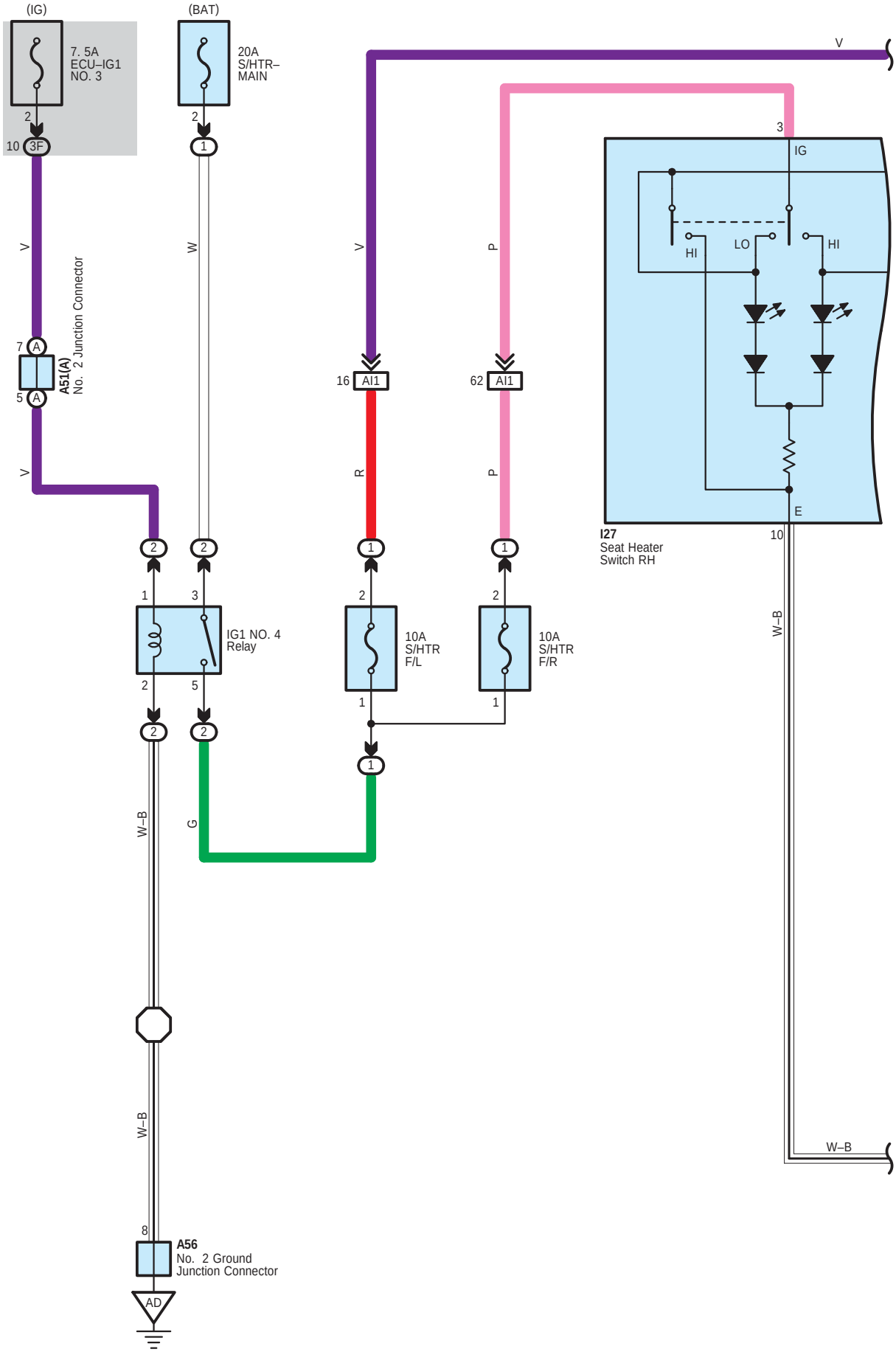
(IG)
7. 5A
ECU–IG1
NO. 3
(BAT)
20A
S/HTR–
MAIN
V
3
IG
HI
LO
HI
E
I27
Seat Heater
Switch RH
10
W–B
V
W
V
P
16
AI1
62
AI1
R
P
A51(A)
No. 2 Junction Connector
IG1 NO. 4
Relay
10A
S/HTR
F/L
10A
S/HTR
F/R
W–B
G
W–B
W–B
A56
No. 2 Ground
Junction Connector
AD

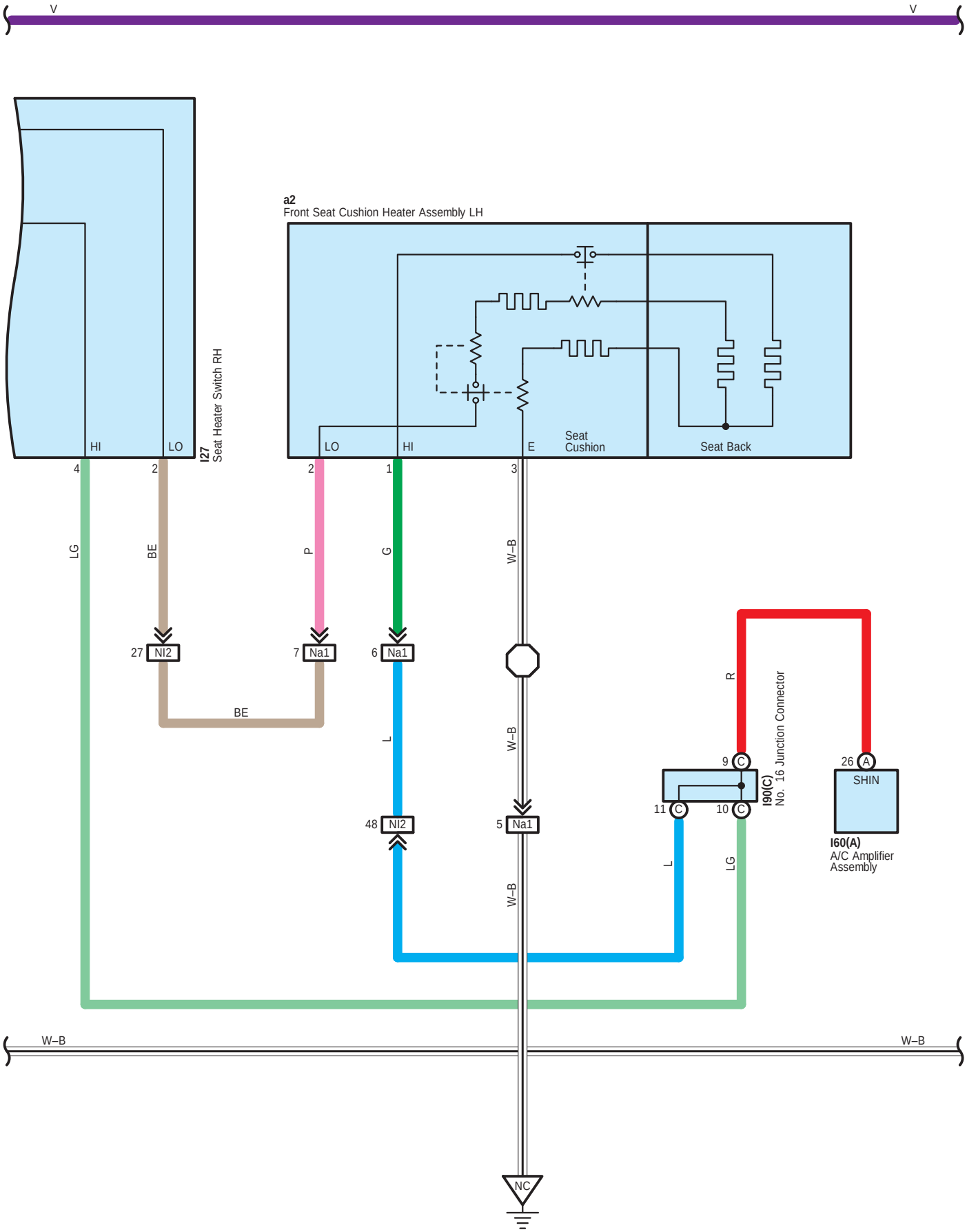
V
V
a2
Front Seat Cushion Heater Assembly LH
HI
LO
I27
Seat Heater Switch RH
LO
HI
E
Seat Cushion
Seat Back
4
2
2
1
3
LG
BE
P
G
W–B
27
NI2
7
Na1
6
Na1
BE
L
W–B
48
NI2
5
Na1
W–B
R
9
C
11
C
10
C
I90(C)
No. 16 Junction Connector
26
A
SHIN
I60(A)
A/C Amplifier
Assembly
L
LG
W–B
W–B
NC

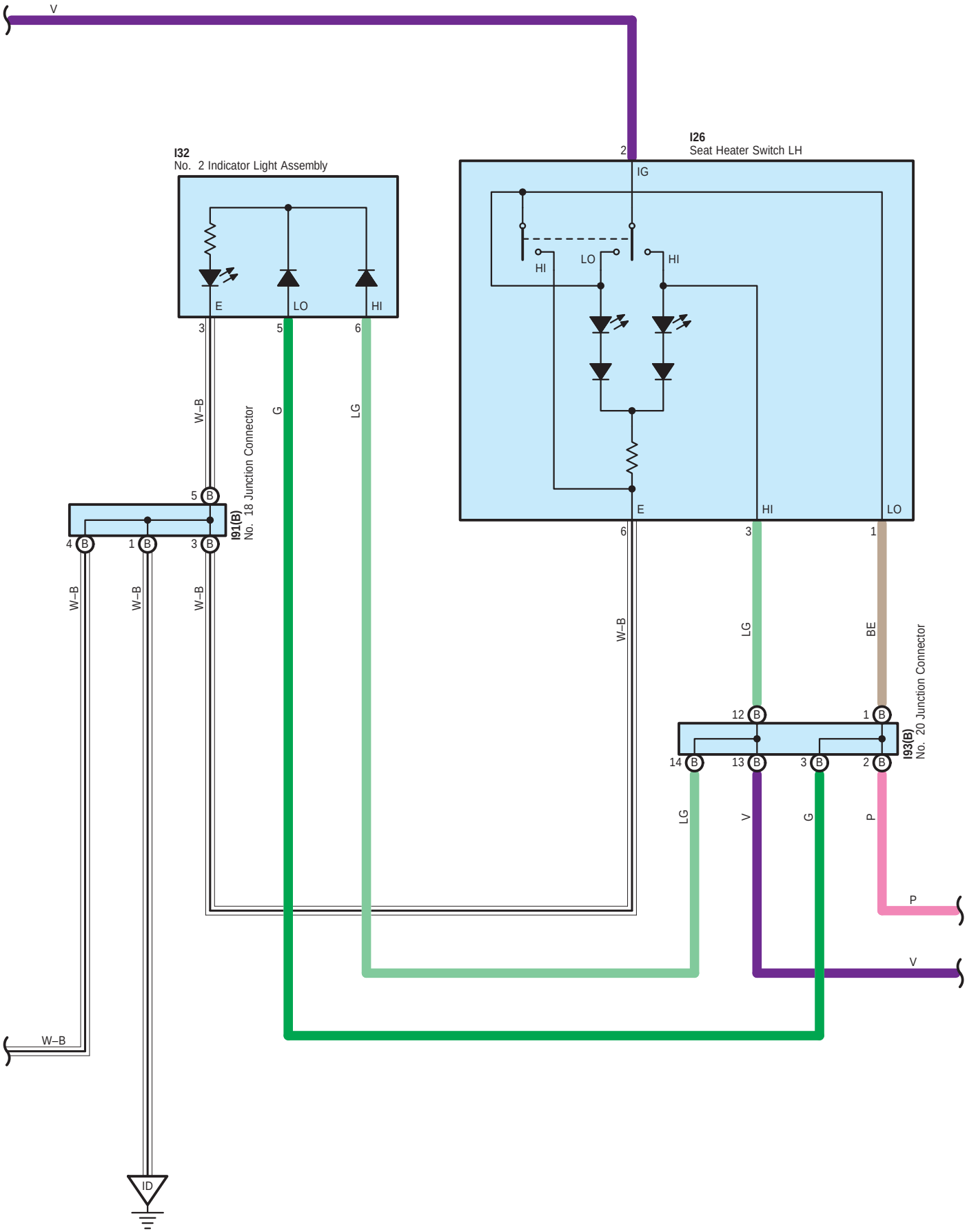
V
I32
No. 2 Indicator Light Assembly
E
LO
HI
3
5
6
I26
Seat Heater Switch LH
2
IG
HI
LO
HI
E
HI
LO
6
3
1
W–B
G
LG
I91(B)
No. 18 Junction Connector
5 B
4 B
1 B
3 B
W–B
W–B
W–B
W–B
LG
BE
I93(B)
No. 20 Junction Connector
12 B
1 B
14 B
13 B
3 B
2 B
LG
V
G
P
P
V
W–B
ID

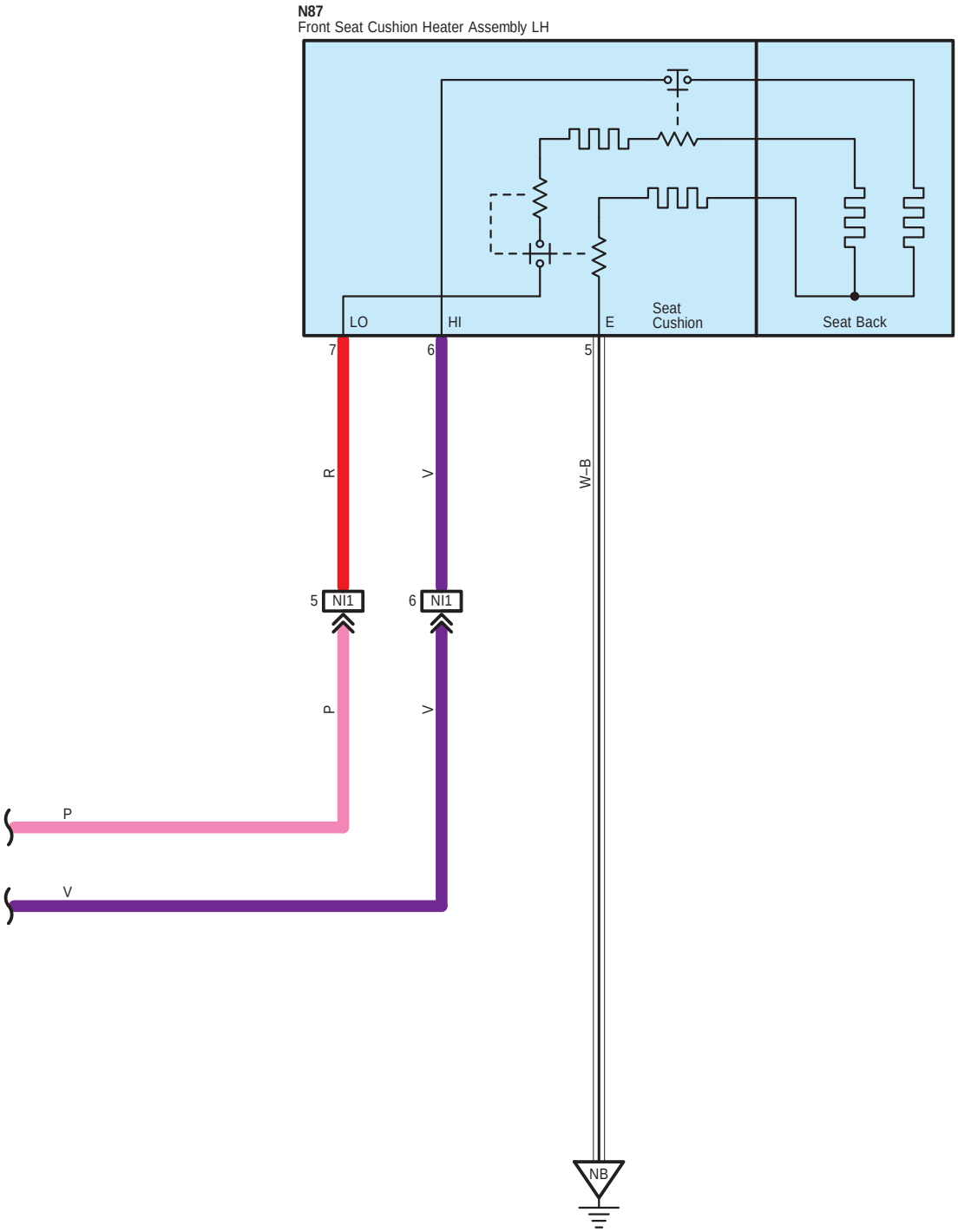
N87
Front Seat Cushion Heater Assembly LH
LO
HI
E
Seat Cushion
Seat Back
7
6
5
R
V
W–B
5
NI1
6
NI1
P
V
P
V
NB

A51
Black

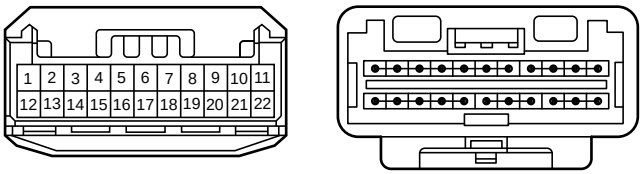

90980-12B54

A56
Black

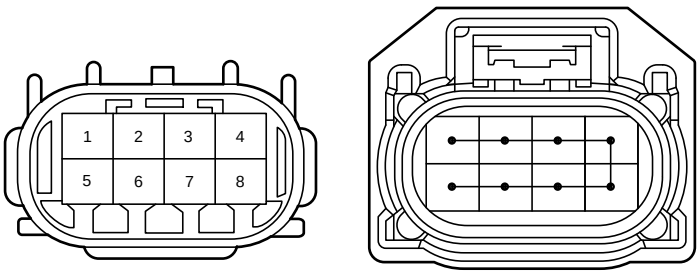

90980-12B56

I26
Blue

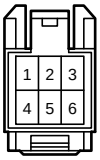

90980-12012

I27
White

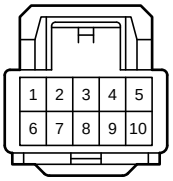

90980-12135

I32
Black

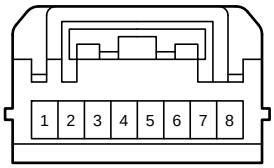

90980-12550

I60
Black

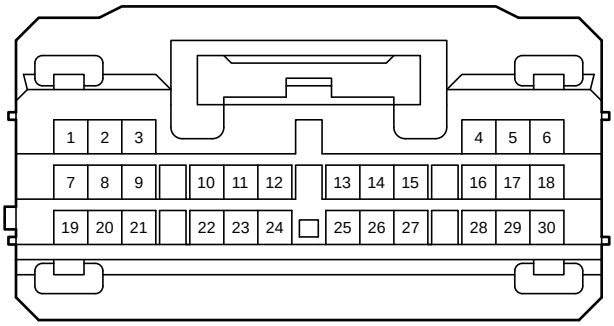

90980-12761

I90
White

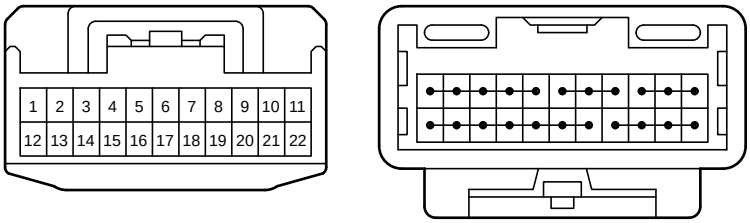

90980-12372

I91
Blue

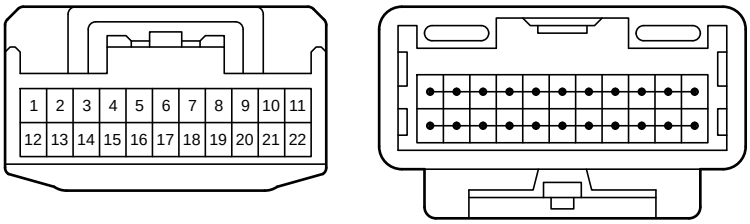

90980-12372

I93
White

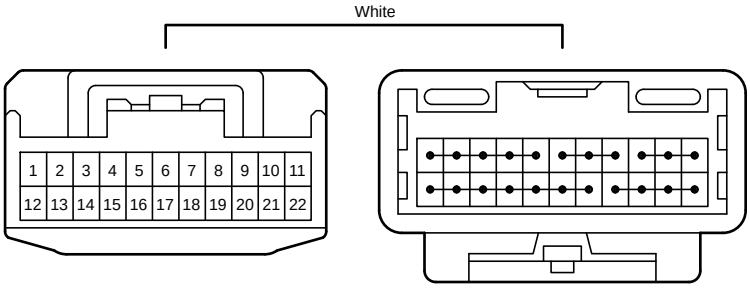

90980-12372

N87
White

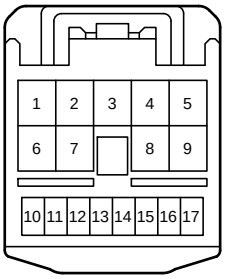

90980-12374

a2
White

90980-11763

3F
White

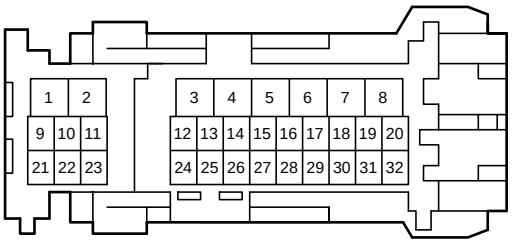

90980-12A47

AI1
Gray

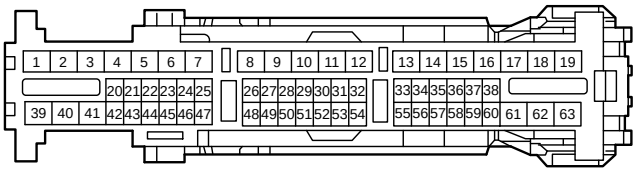

90980-12B20

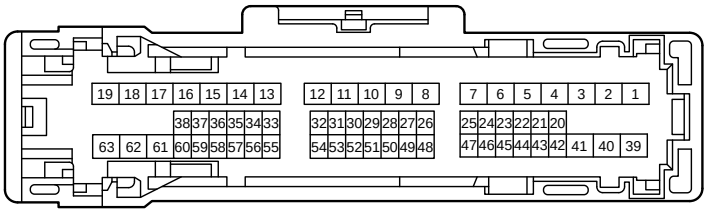

90980-12B19

NI1
White

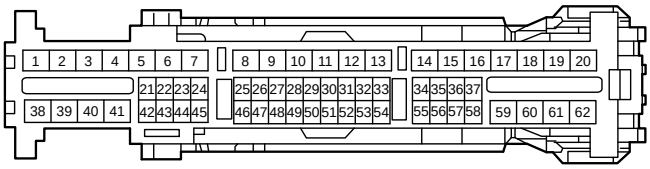

90980-12B22

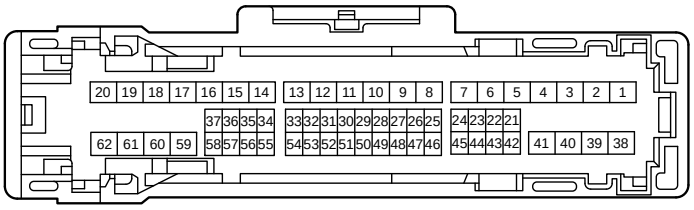

90980-12B21

NI2
White

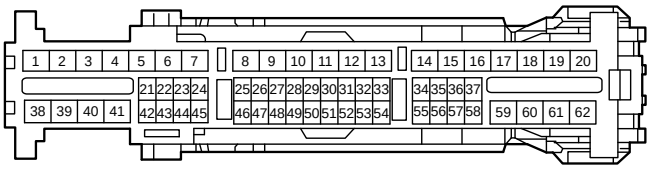

90980-12B22

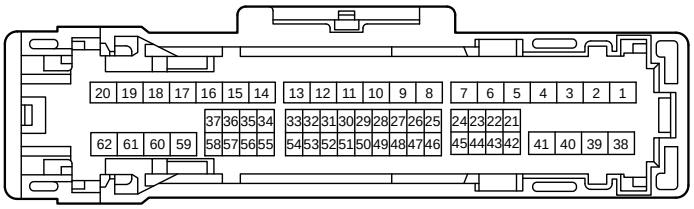

90980-12B21

Na1
White

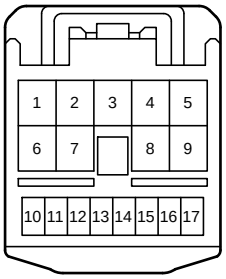

90980-12374

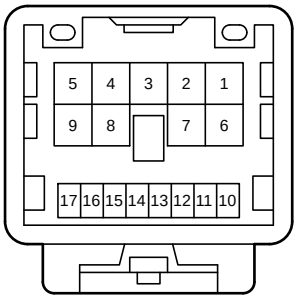

90980-12373