(Cont. next page)

Engine Control (3ZR–FE, 3ZR–FAE) (Before Oct. 2015 Production)

∗1 : 3ZR–FE
∗2 : 3ZR–FAE
∗18 : Before Apr. 2015 Production
∗19 : From Apr. 2015 Production

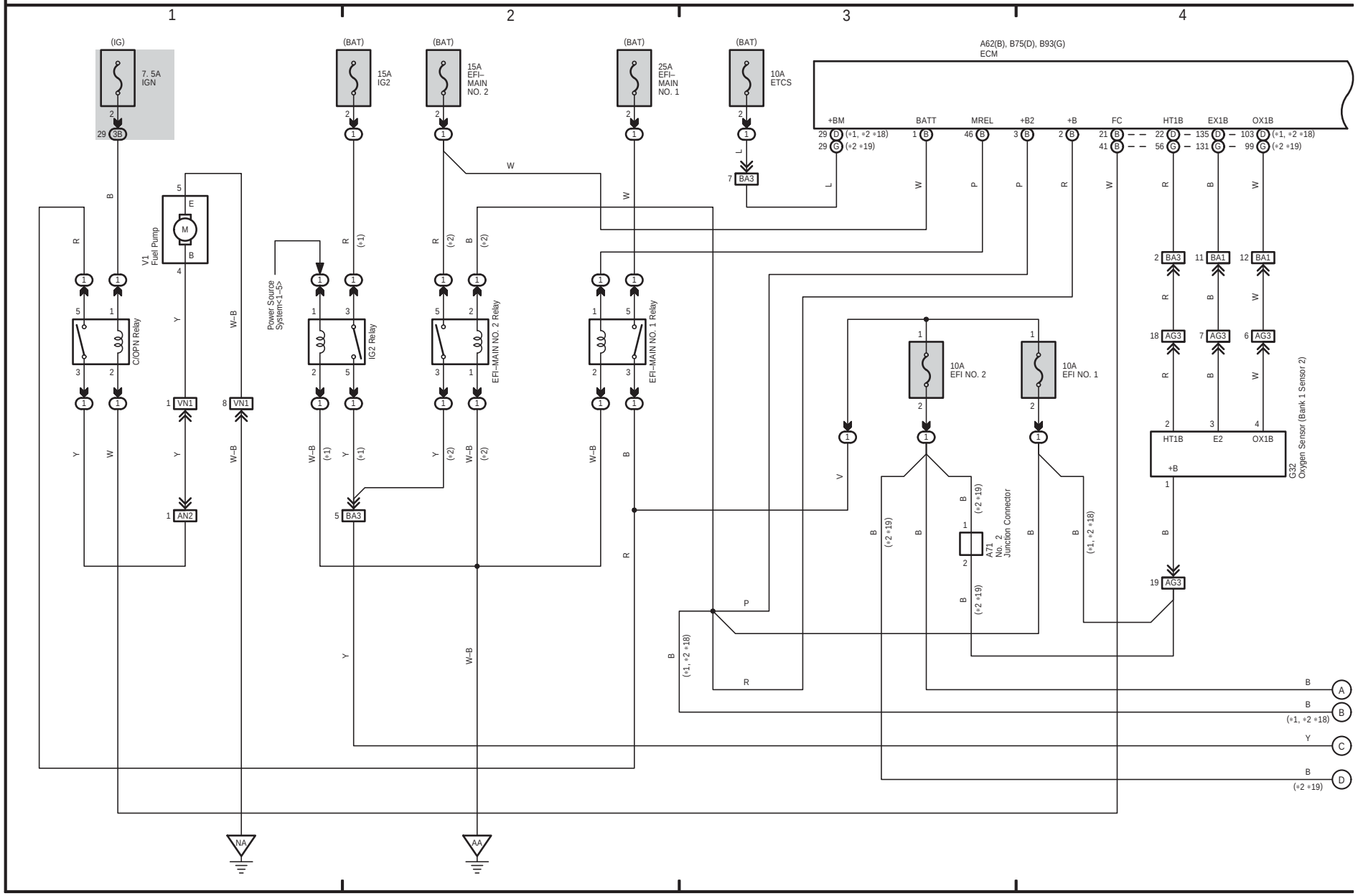

(Cont. next page)

Engine Control (3ZR–FE, 3ZR–FAE) (Before Oct. 2015 Production)

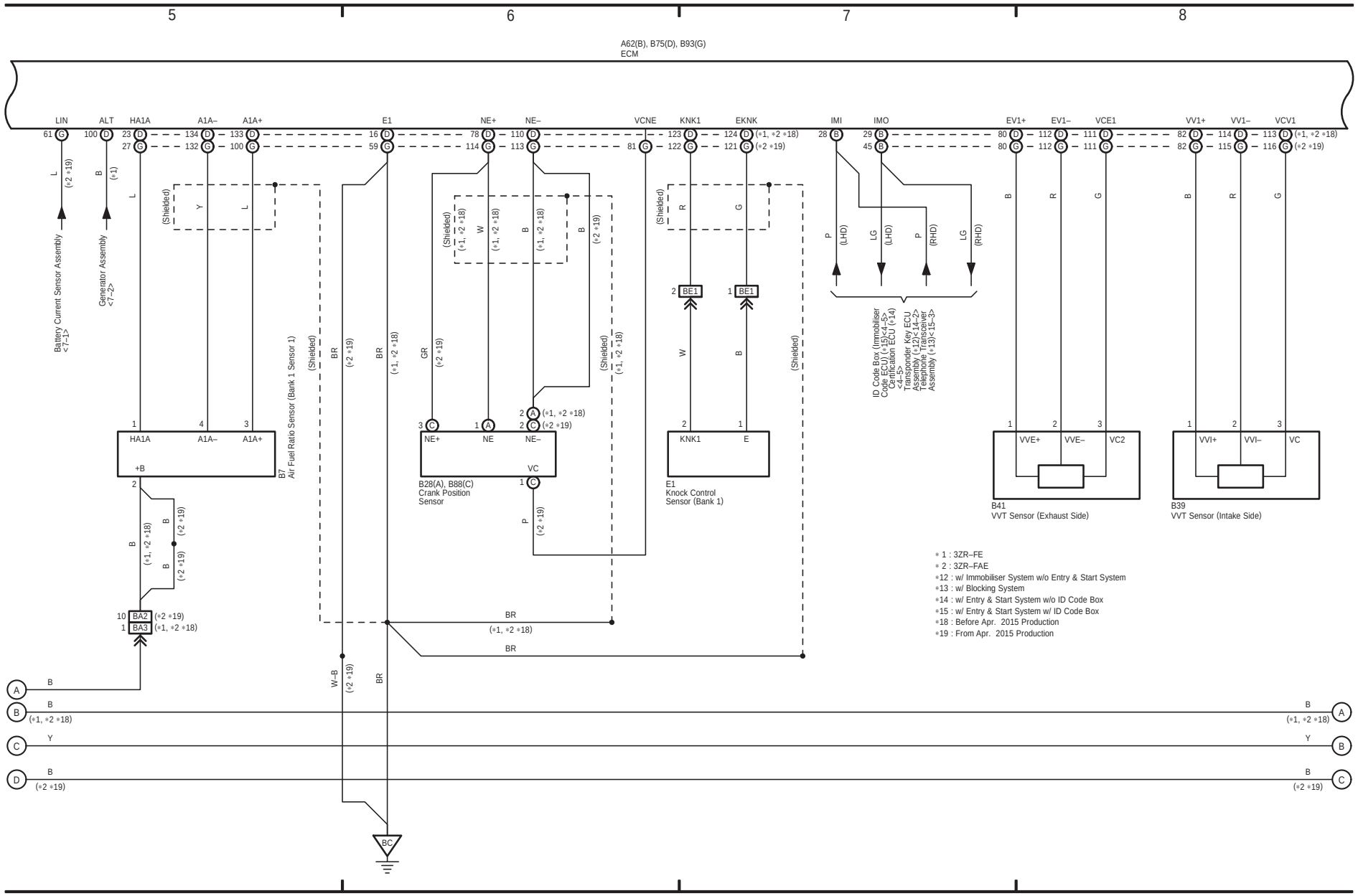

(Cont. next page)

Engine Control (3ZR–FE, 3ZR–FAE) (Before Oct. 2015 Production)

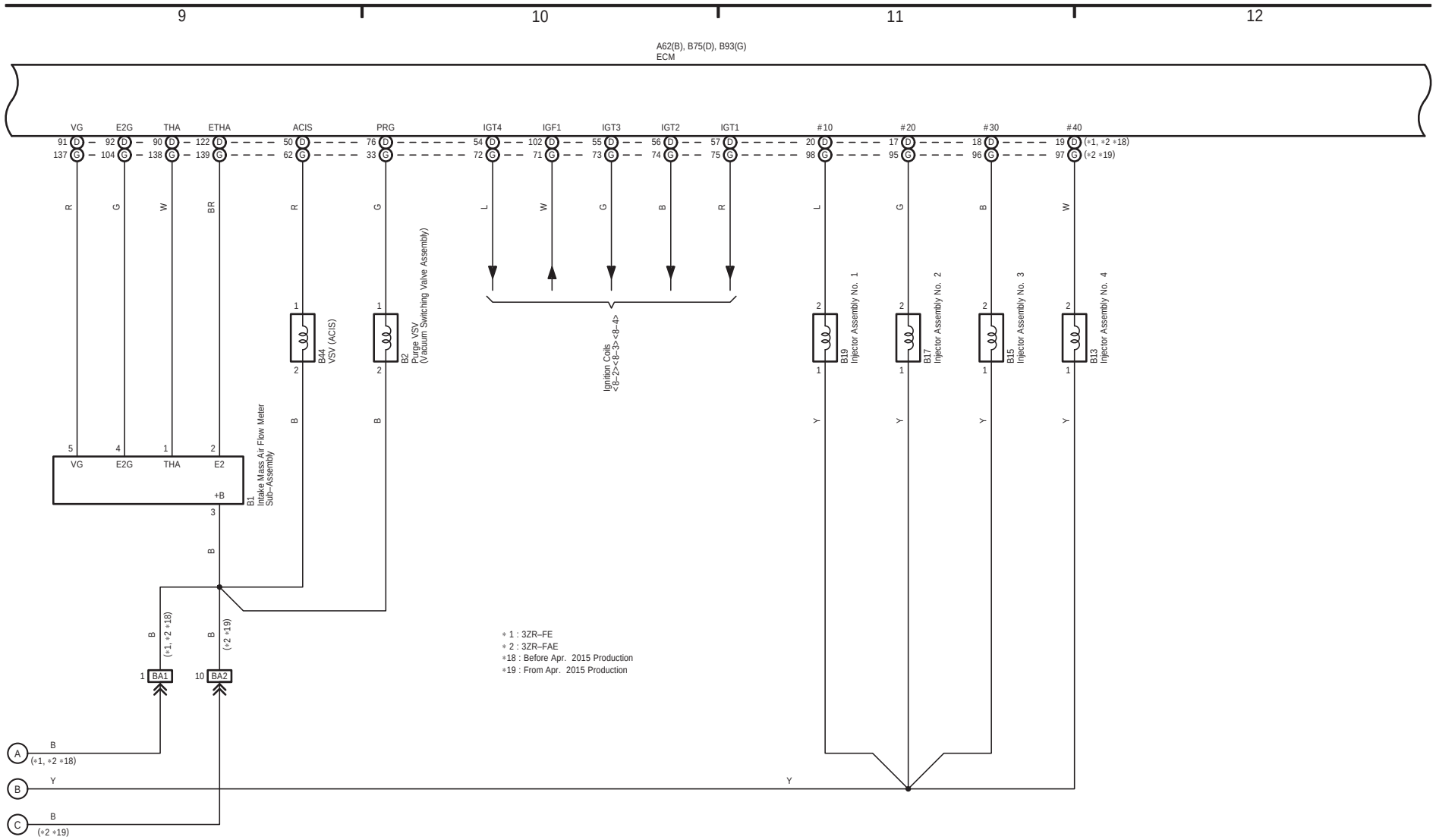

(Cont. next page)

Engine Control (3ZR–FE, 3ZR–FAE) (Before Oct. 2015 Production)

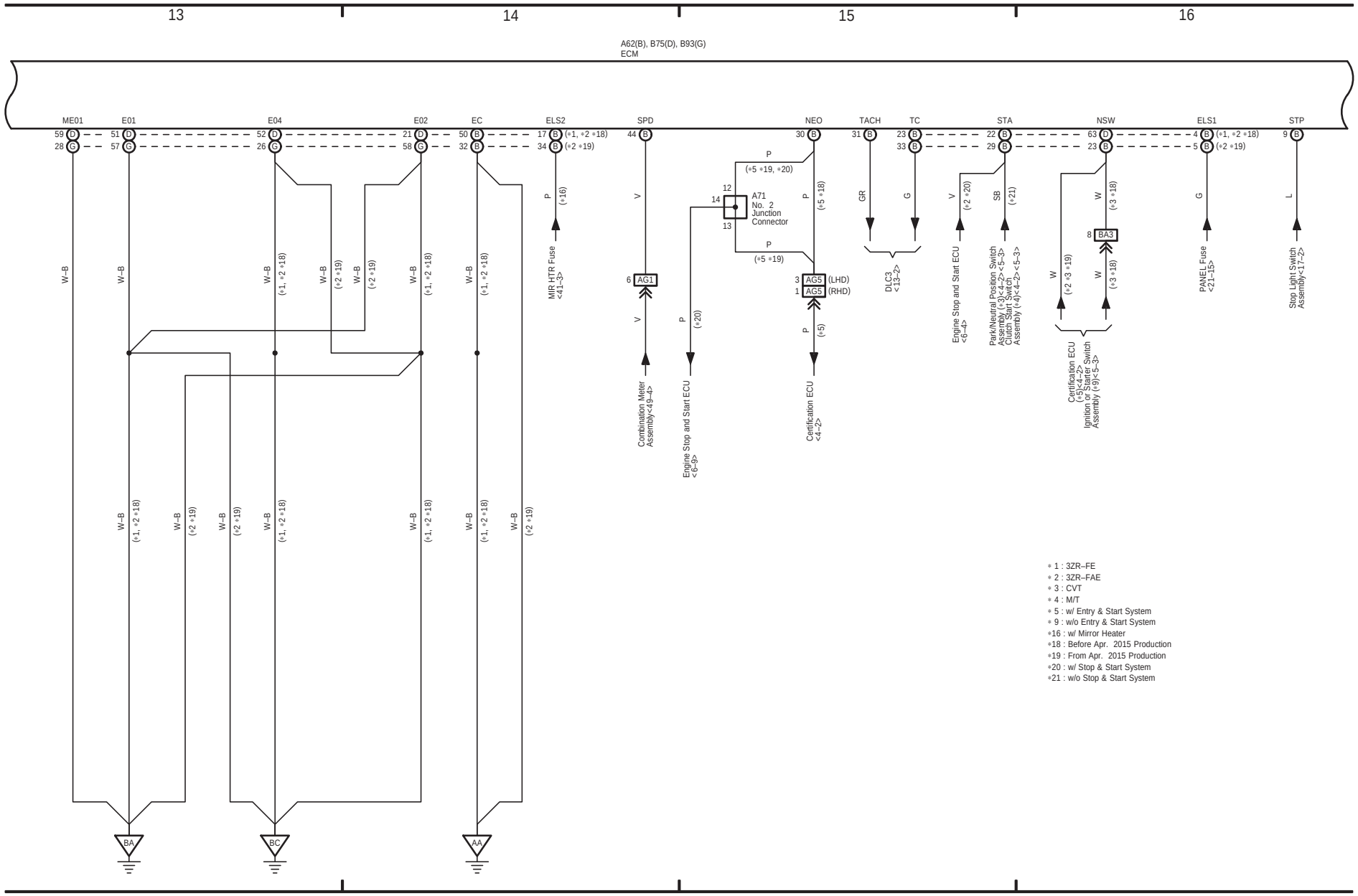

(Cont. next page)

Engine Control (3ZR–FE, 3ZR–FAE) (Before Oct. 2015 Production)

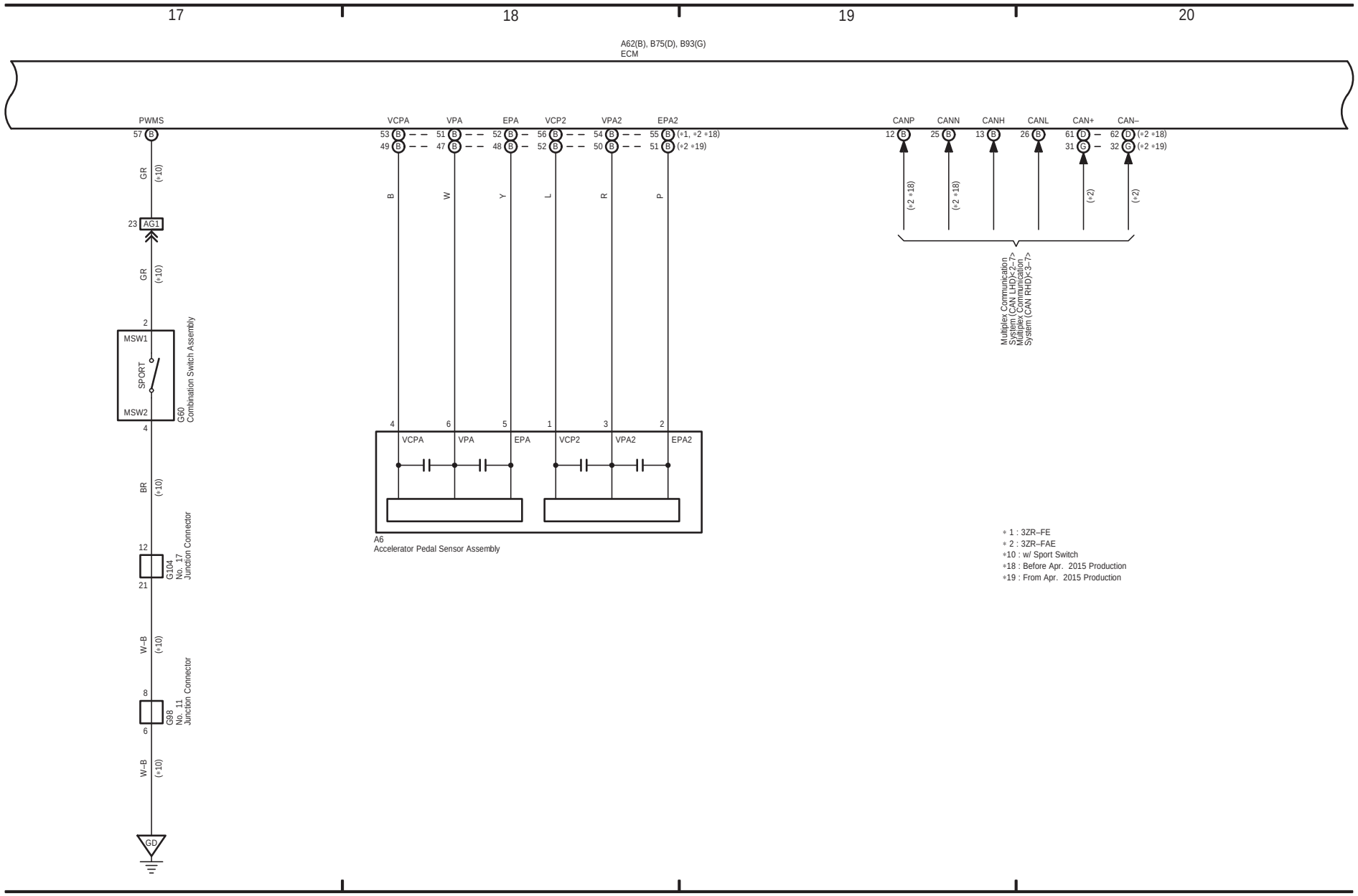

(Cont. next page)

Engine Control (3ZR–FE, 3ZR–FAE) (Before Oct. 2015 Production)

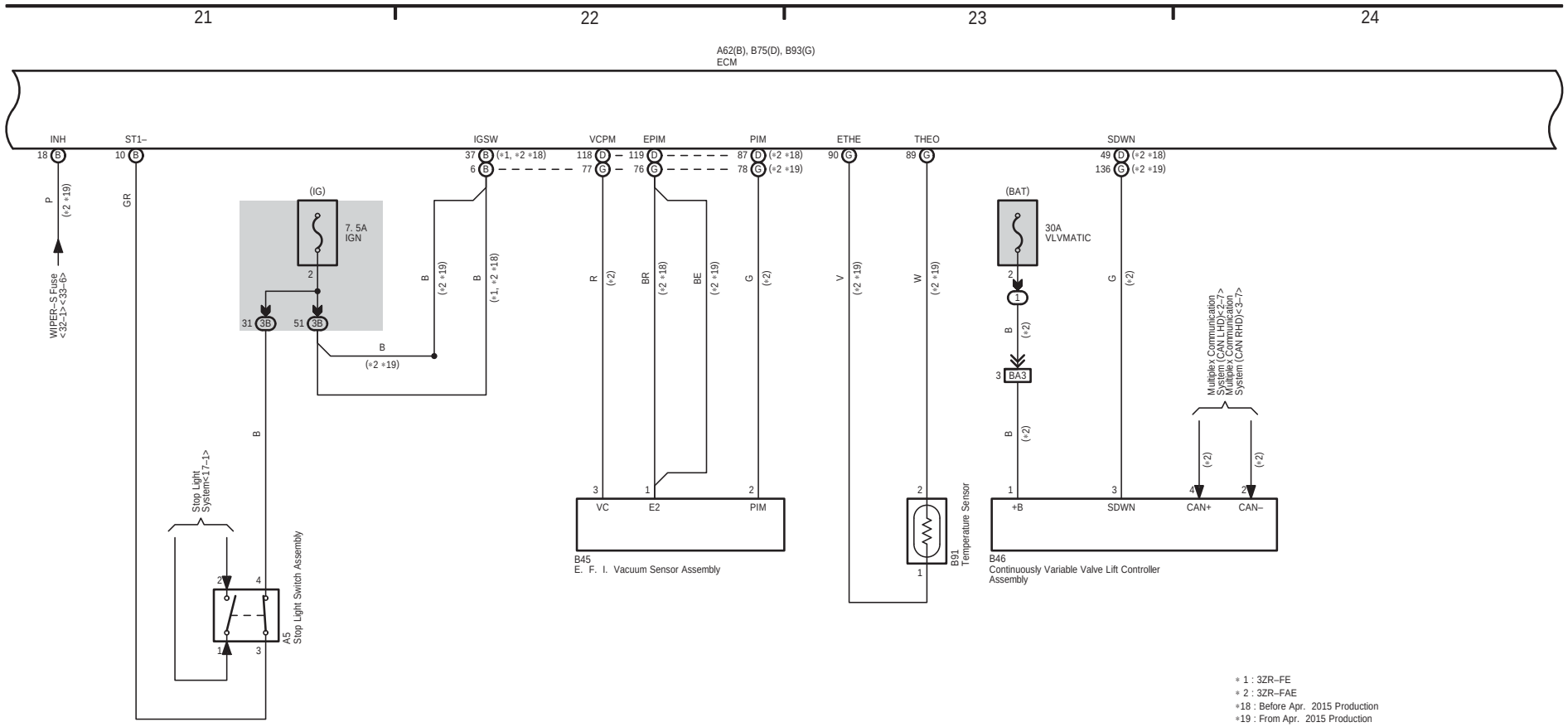

* 1 : 3ZR–FE
* 2 : 3ZR–FAE
*18 : Before Apr. 2015 Production
*19 : From Apr. 2015 Production

(Cont. next page)

Engine Control (3ZR–FE, 3ZR–FAE) (Before Oct. 2015 Production)

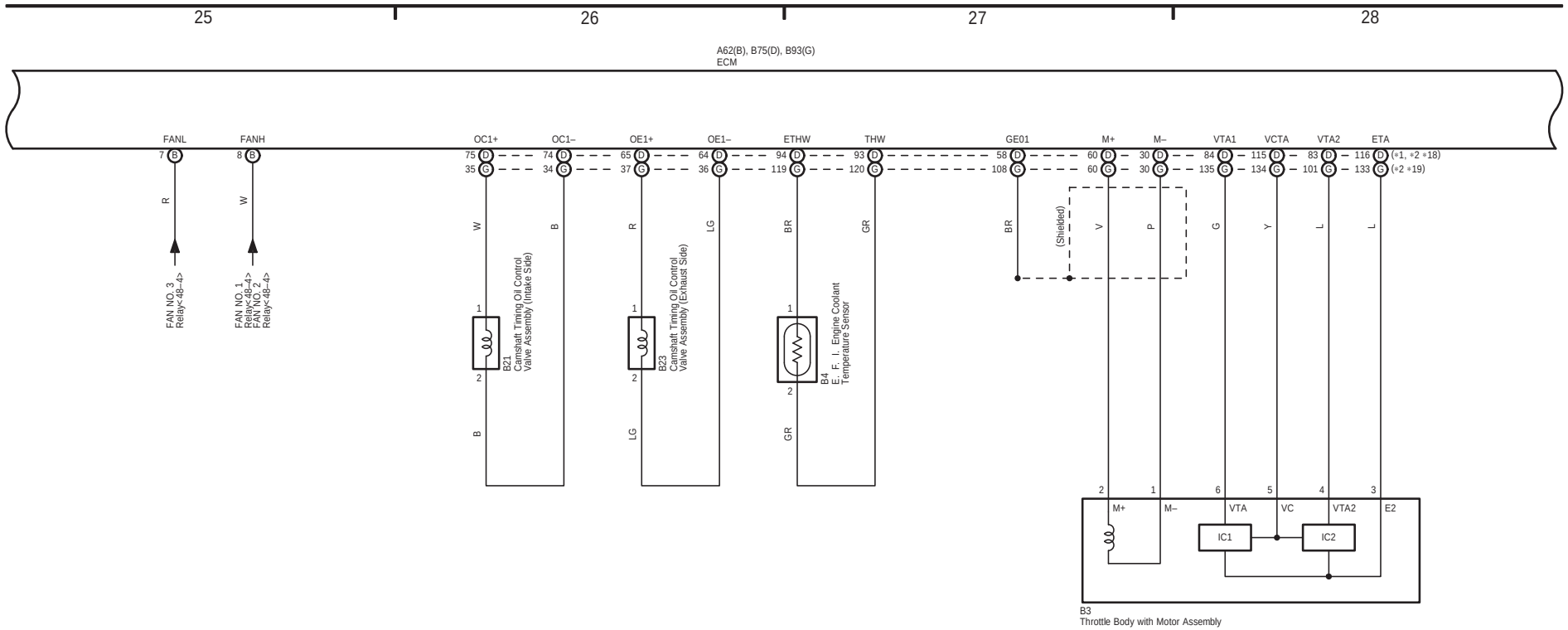

* 1 : 3ZR–FE
* 2 : 3ZR–FAE
*18 : Before Apr. 2015 Production
*19 : From Apr. 2015 Production

(Cont. next page)

Cruise Control (3ZR–FE, 3ZR–FAE) (Before Oct. 2015 Production)

CVT and Shift Indicator (3ZR–FE, 3ZR–FAE) (Before Oct. 2015 Production)

29 30 31 32

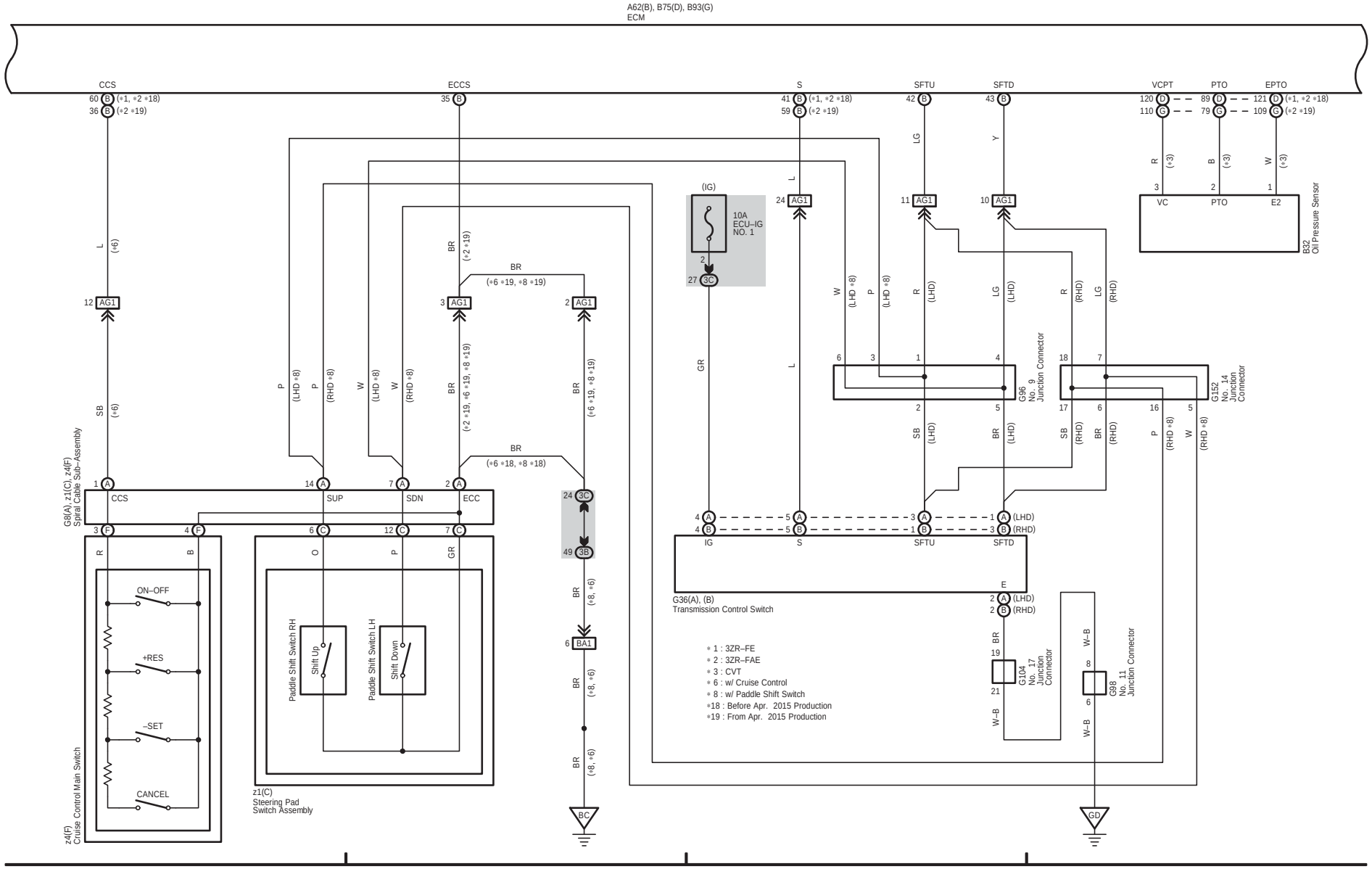

(Cont. next page)

CVT and Shift Indicator (3ZR–FE, 3ZR–FAE) (Before Oct. 2015 Production)

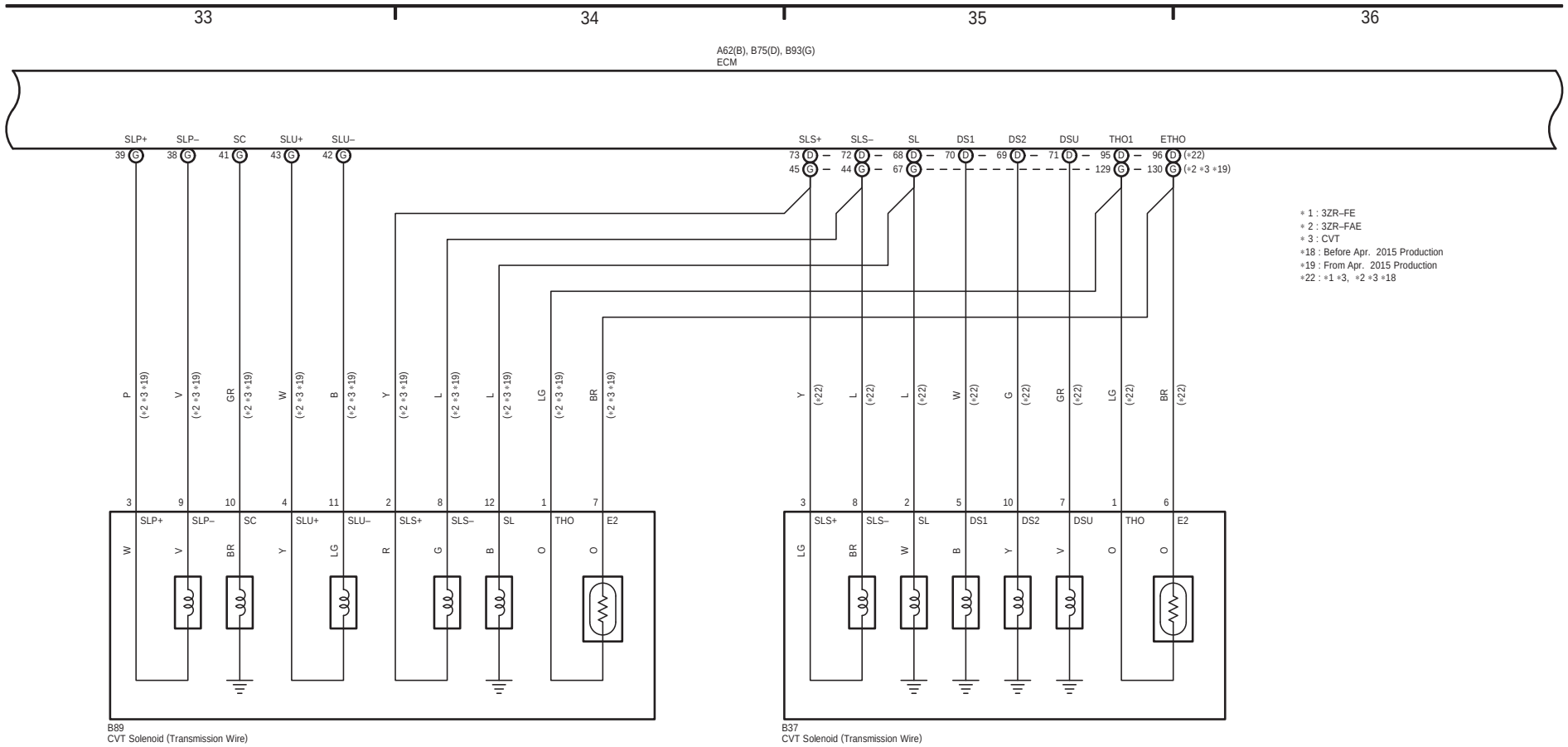

(Cont. next page)

CVT and Shift Indicator (3ZR–FE, 3ZR–FAE) (Before Oct. 2015 Production)

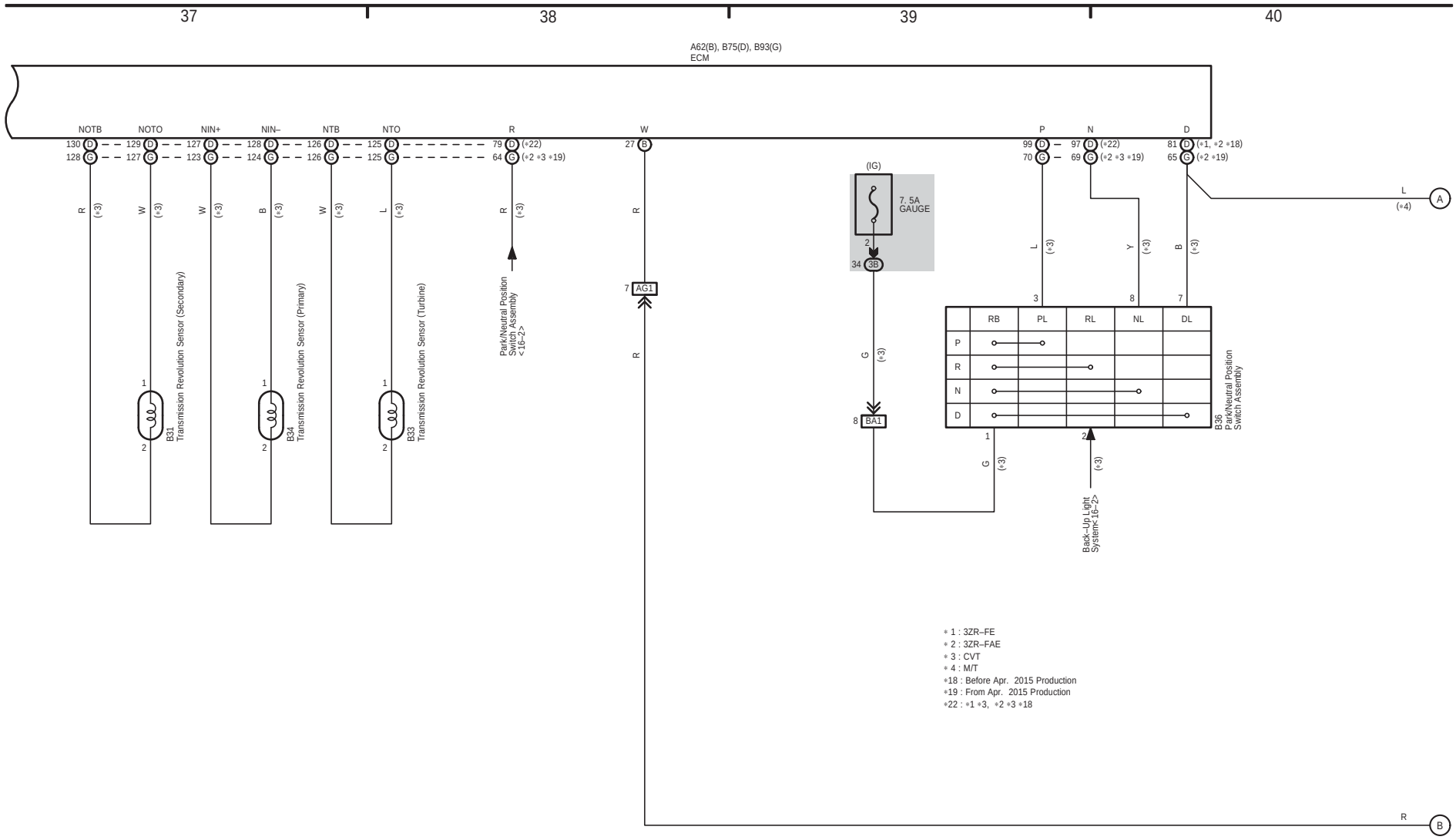

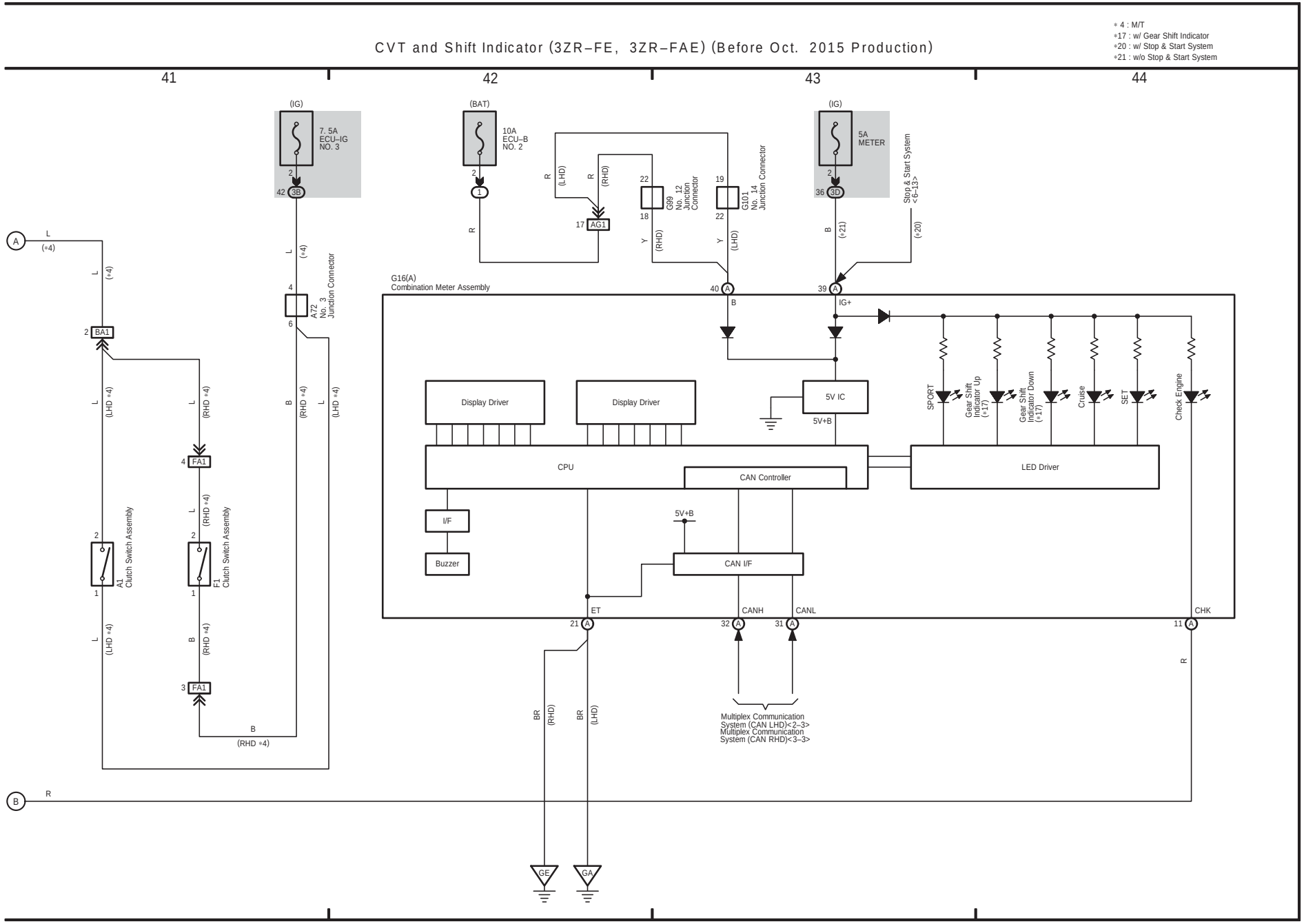
CVT and Shift Indicator (3ZR–FE, 3ZR–FAE) (Before Oct. 2015 Production)
* 4 : M/T
*17 : w/ Gear Shift Indicator
*20 : w/ Stop & Start System
*21 : w/o Stop & Start System
41
42
43
44
(IG)
7. 5A
ECU–IG
NO. 3
(BAT)
10A
ECU–B
NO. 2
(IG)
5A
METER
Stop & Start System
<6–13>
G99
No. 12
Junction
Connector
G101
No. 14
Junction Connector
A72
No. 3
Junction Connector
BA1
FA1
A1
Clutch Switch Assembly
F1
Clutch Switch Assembly
AG1
G16(A)
Combination Meter Assembly
Display Driver
Display Driver
5V IC
5V+B
CPU
CAN Controller
LED Driver
I/F
Buzzer
CAN I/F
SPORT
Gear Shift
Indicator Up
(*17)
Gear Shift
Indicator Down
(*17)
Cruise
SET
Check Engine
IG+
ET
CANH
CANL
CHK
Multiplex Communication
System (CAN LHD)<2–3>
Multiplex Communication
System (CAN RHD)<3–3>
GE
GA