(Cont. next page)

Manual Air Conditioner (From Oct. 2015 Production)

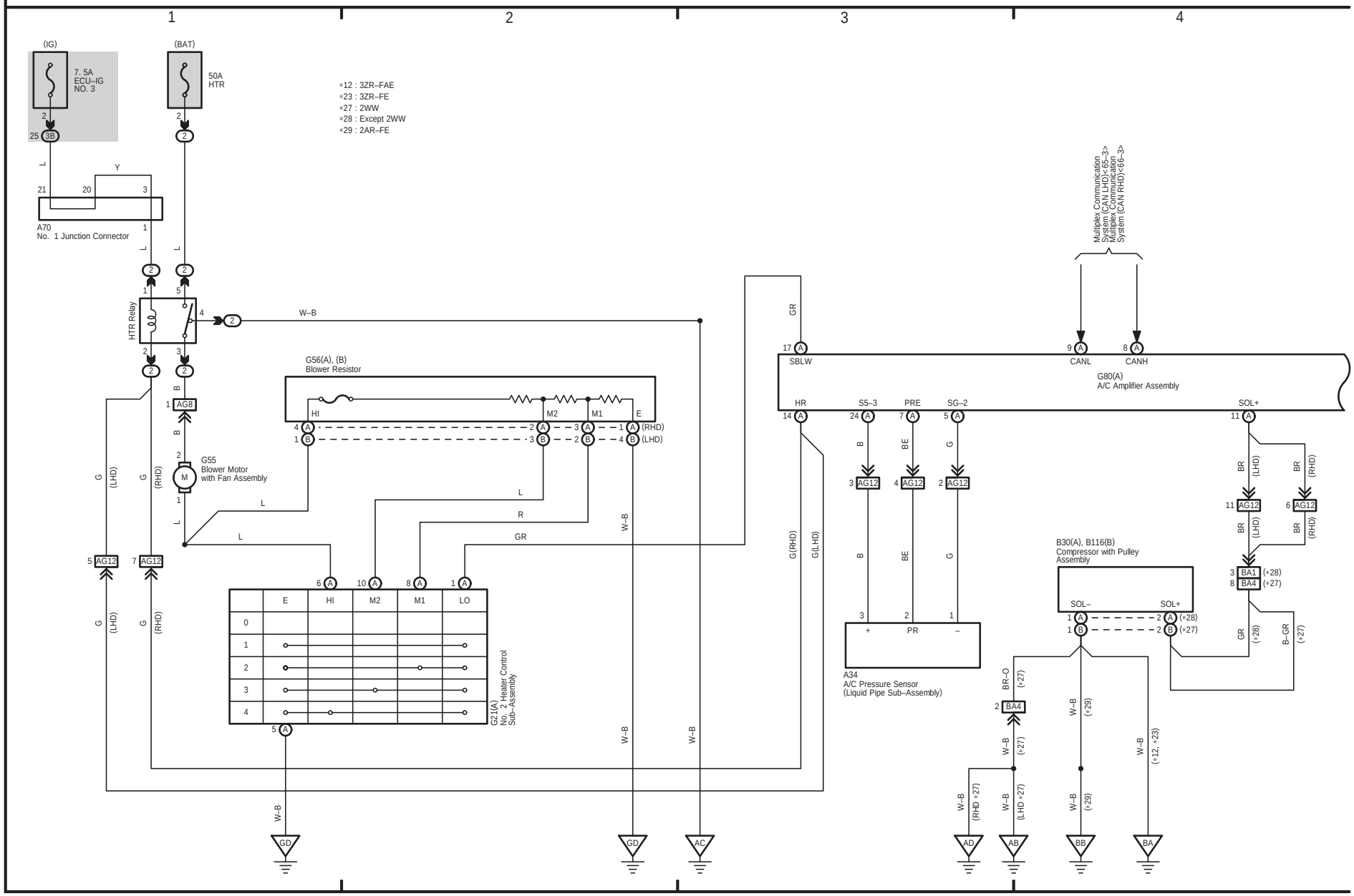

(Cont. next page)

Manual Air Conditioner (From Oct. 2015 Production)

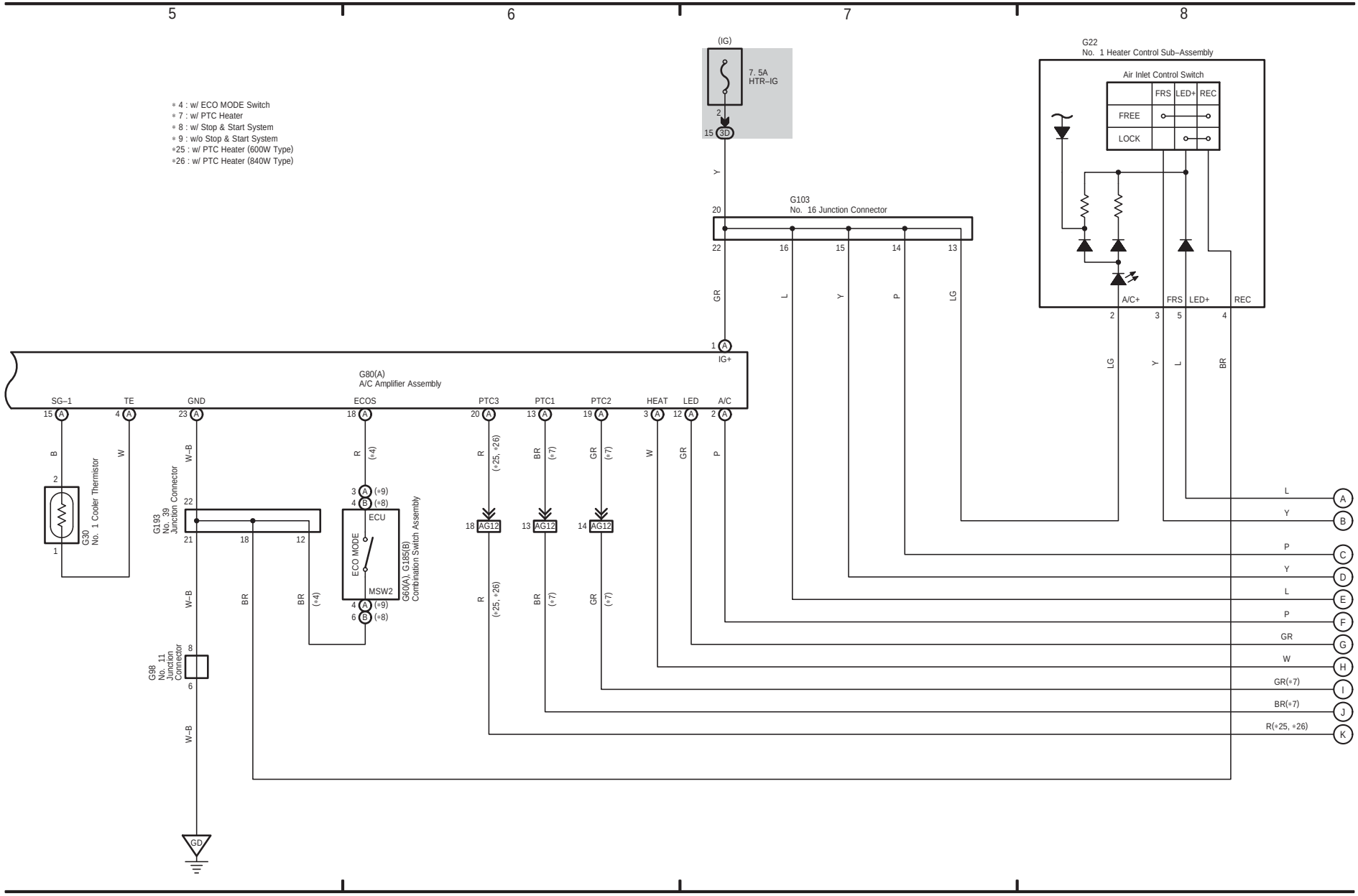

(Cont. next page)

Manual Air Conditioner (From Oct. 2015 Production)

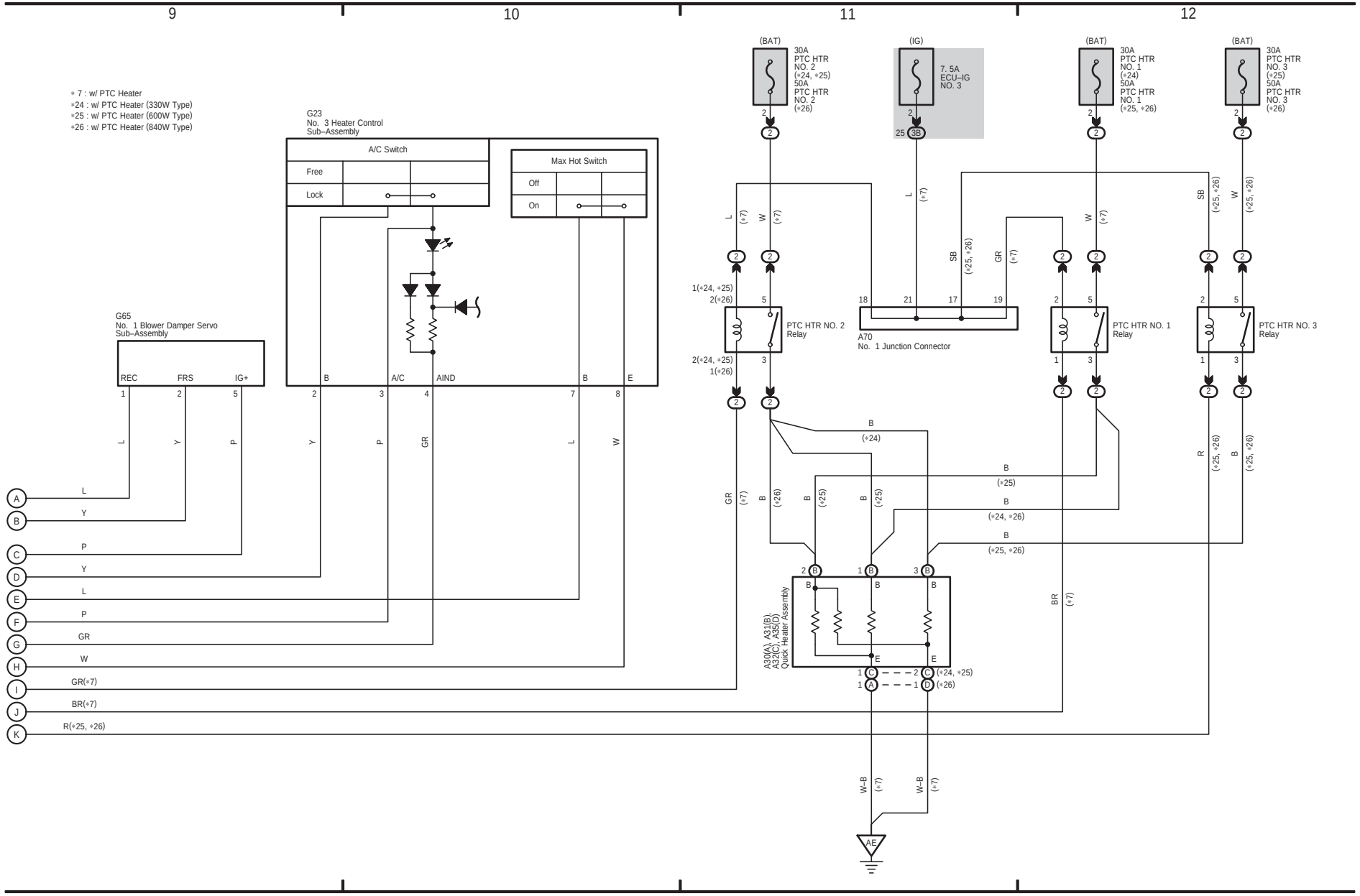

Manual Air Conditioner (From Oct. 2015 Production)
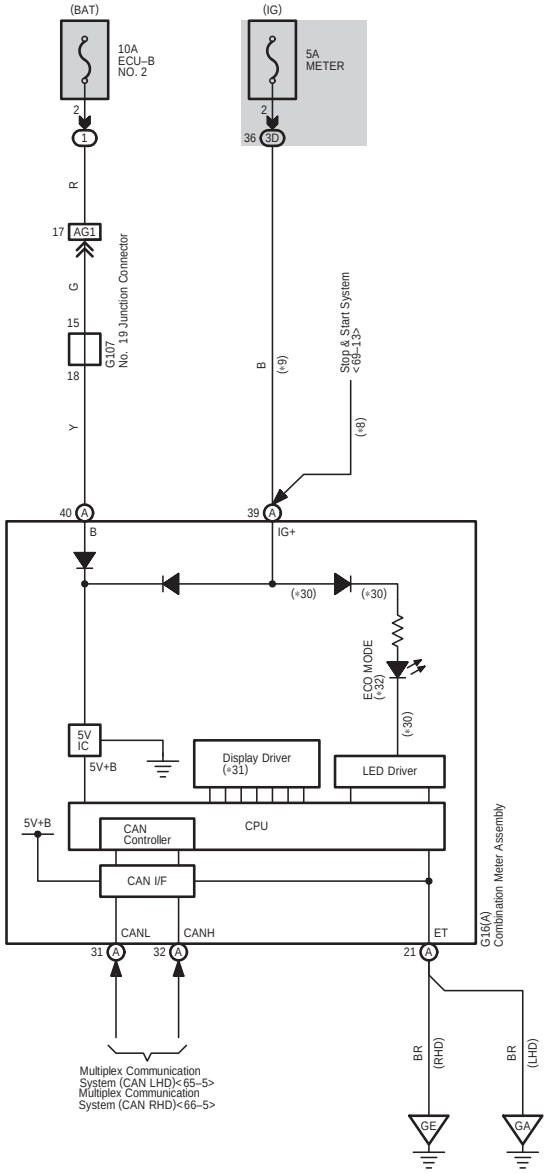
∗ 8 : w/ Stop & Start System
∗ 9 : w/o Stop & Start System
∗30 : Segment Display Type
∗31 : TFT Display Type
∗32 : LED Type Indicator