(Cont. next page)

SRS (Korea) (Before Oct. 2015 Production)

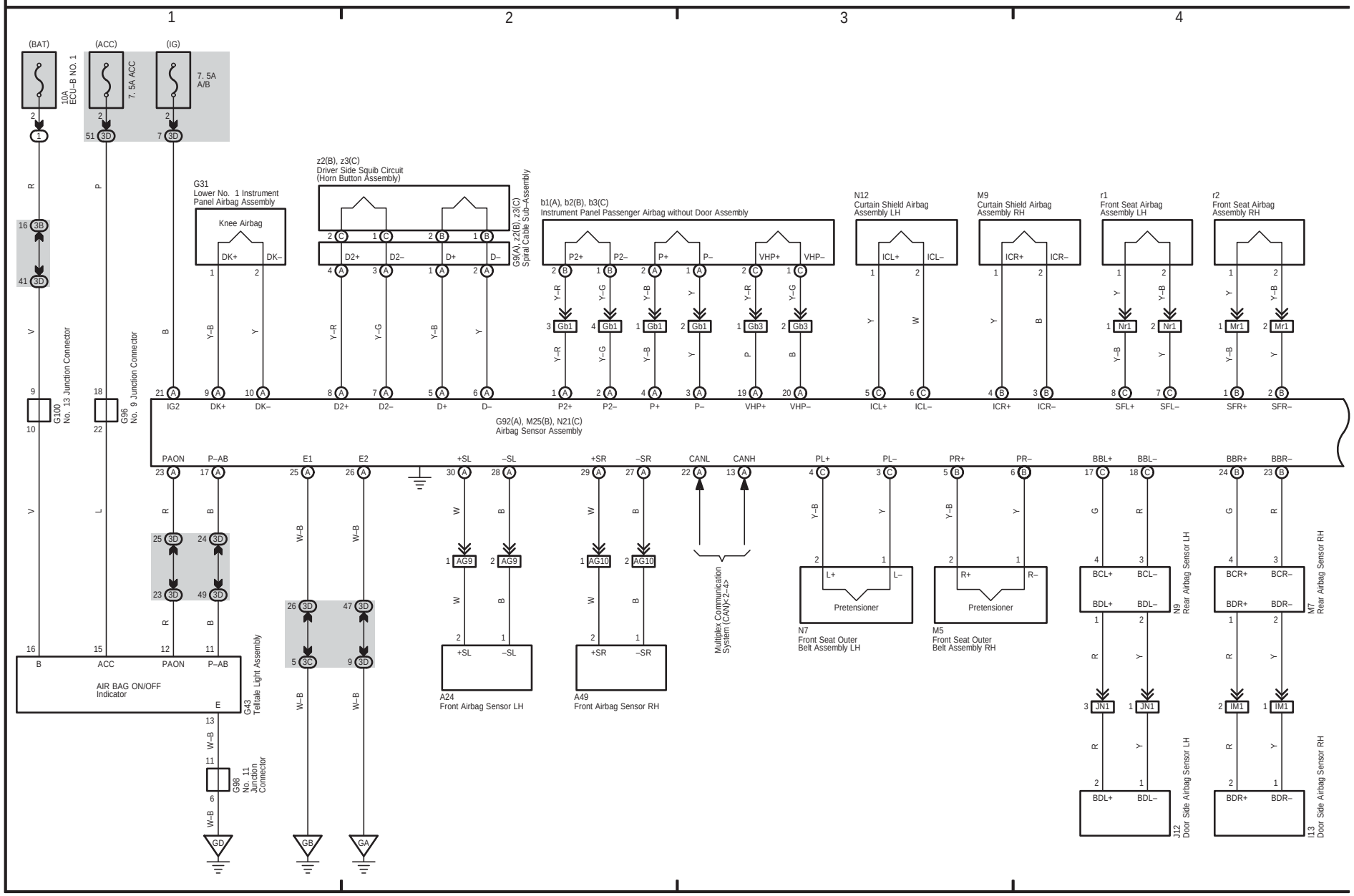

(Cont. next page)

SRS (Korea)
(Before Oct. 2015 Production)

Seat Belt Warning (Korea) (Before Oct. 2015 Production)

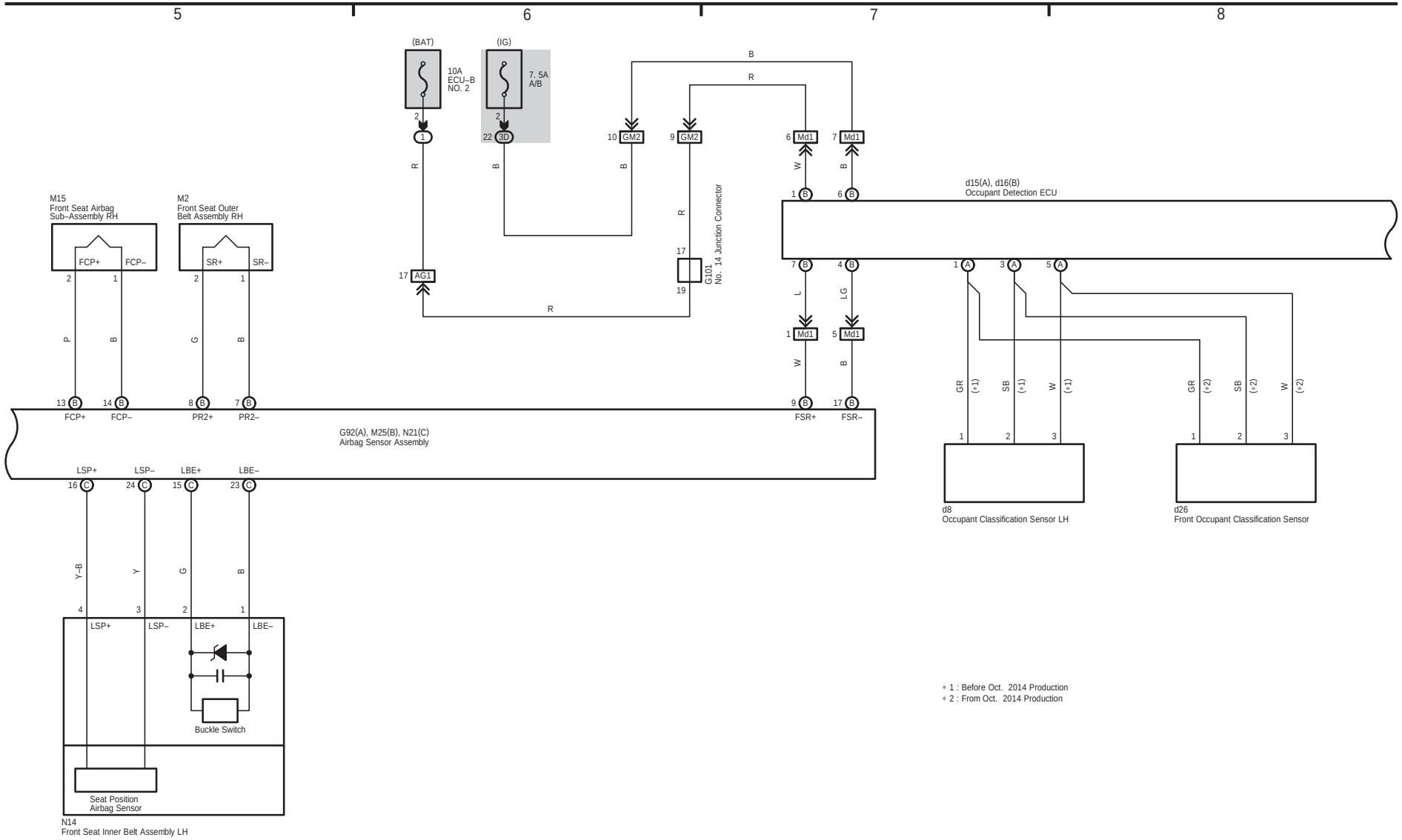

* 1 : Before Oct. 2014 Production
* 2 : From Oct. 2014 Production

(Cont. next page)

Seat Belt Warning (Korea) (Before Oct. 2015 Production)

* 1 : Before Oct. 2014 Production
* 2 : From Oct. 2014 Production

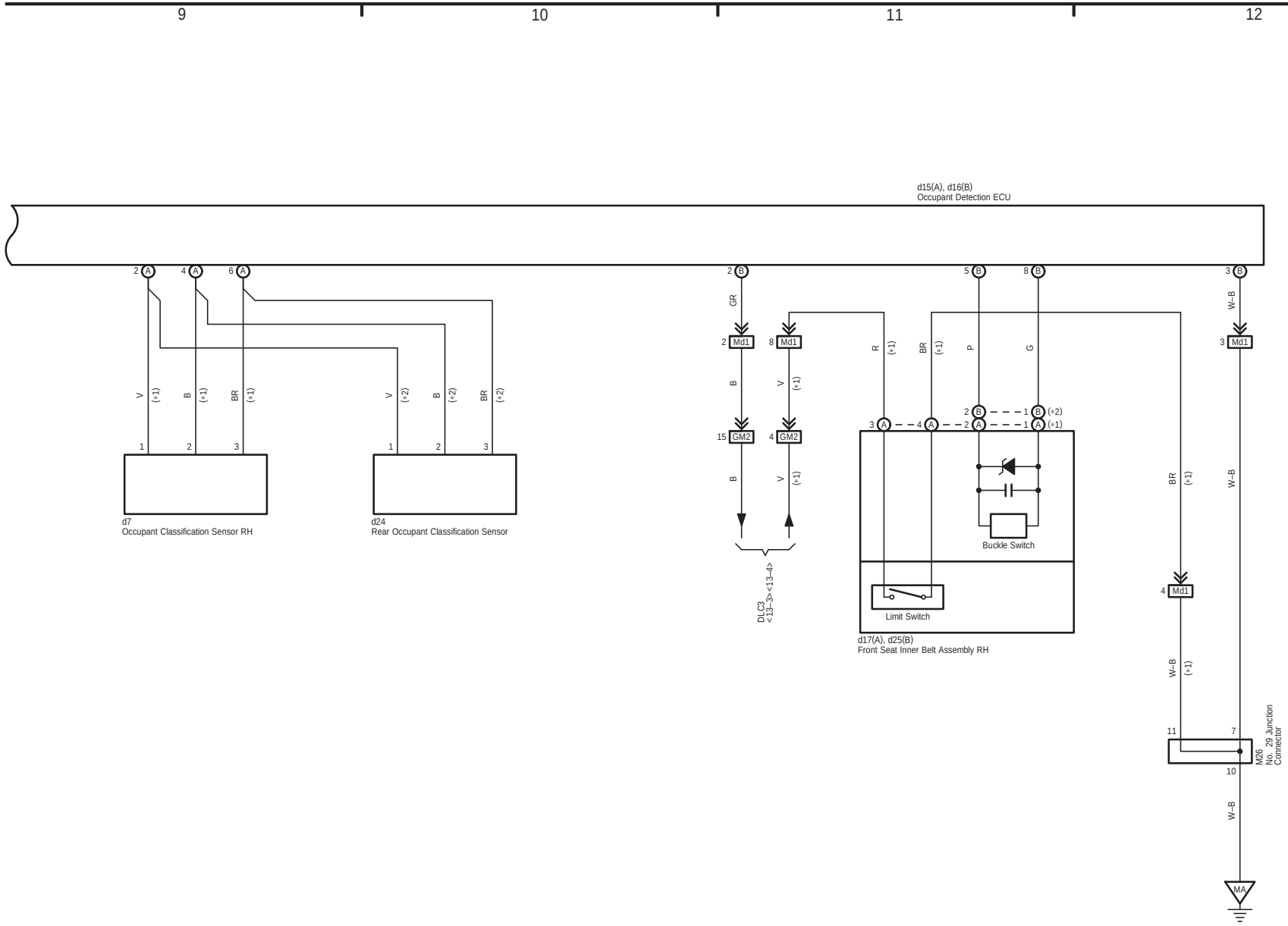
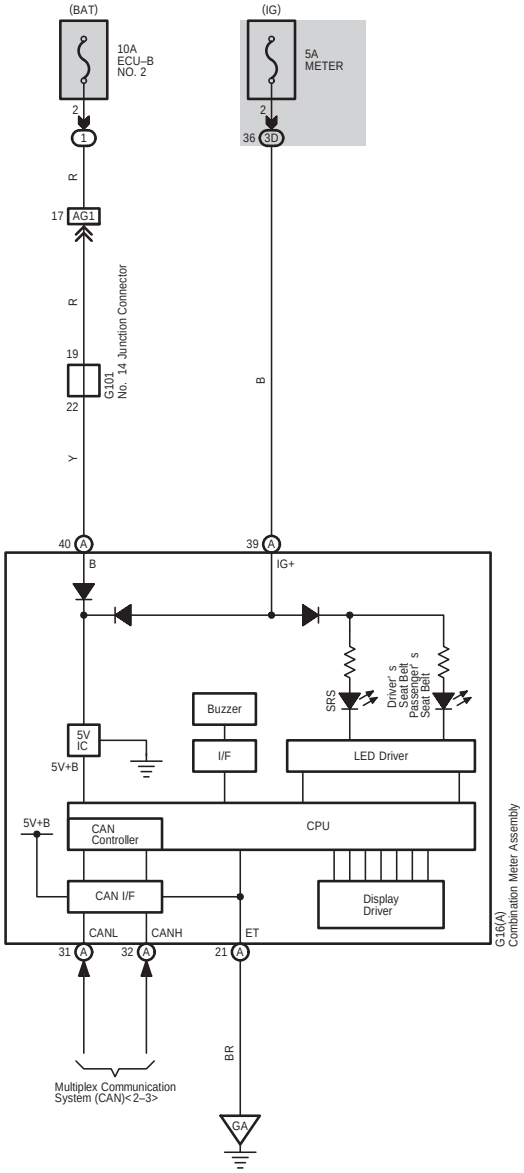
Seat Belt Warning (Korea) (Before Oct. 2015 Production)