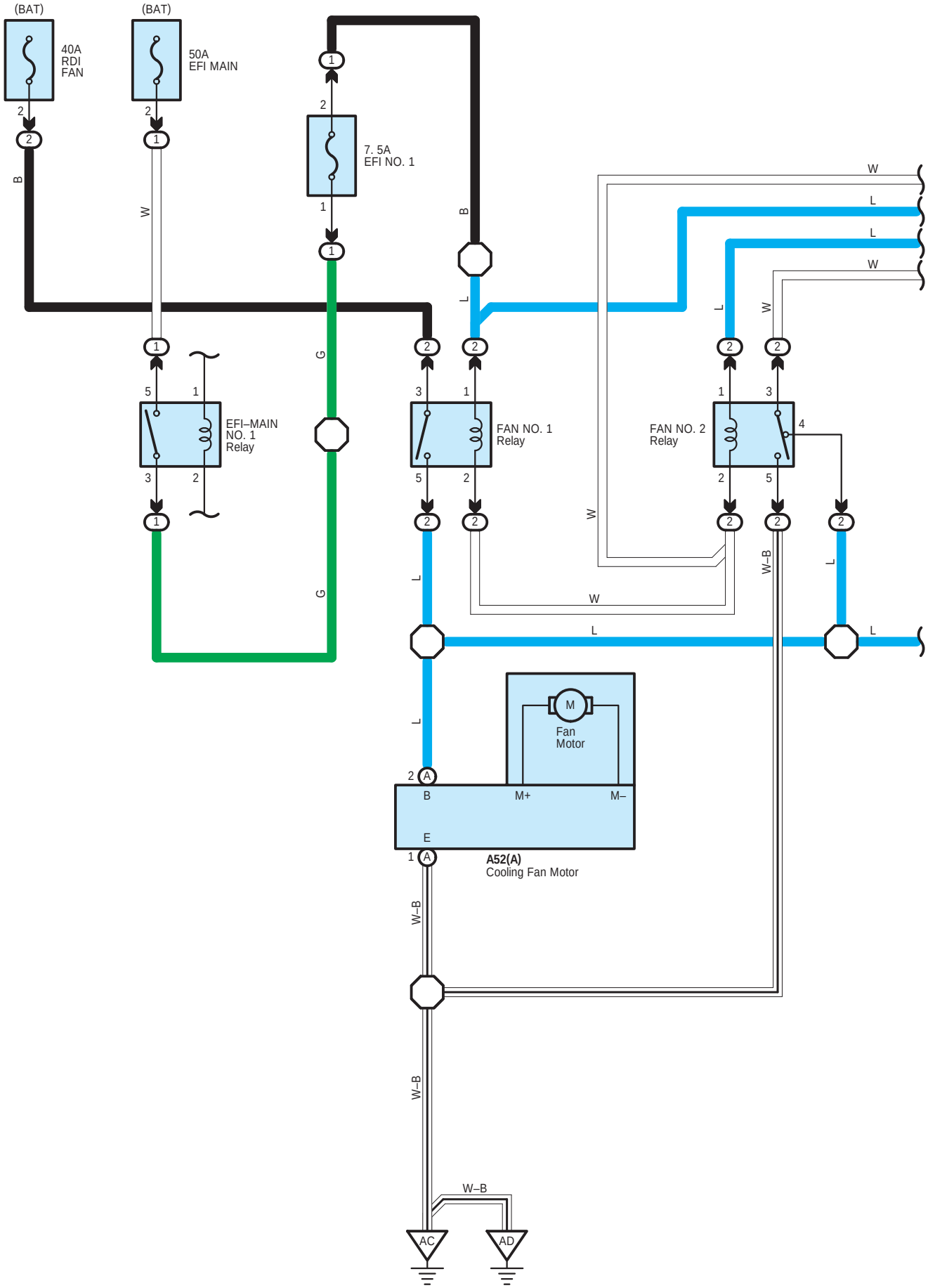
(BAT)
40A
RDI
FAN
(BAT)
50A
EFI MAIN
7. 5A
EFI NO. 1
EFI–MAIN
NO. 1
Relay
FAN NO. 1
Relay
FAN NO. 2
Relay
Fan
Motor
M+
M–
B
E
A52(A)
Cooling Fan Motor
AC
AD
W
L
B
G
W–B

Cooling Fan (2WW) (From Oct. 2015 Production)

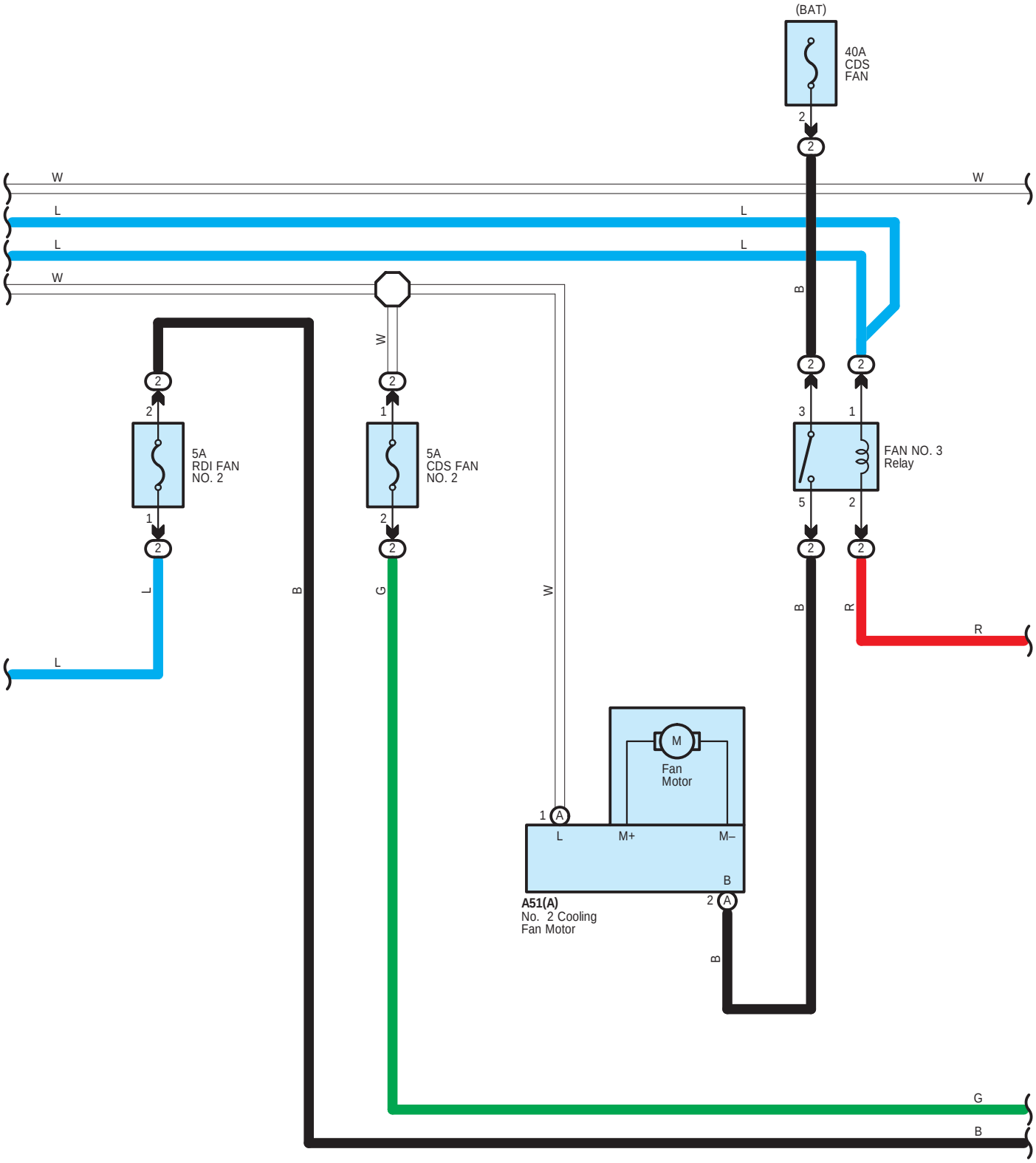

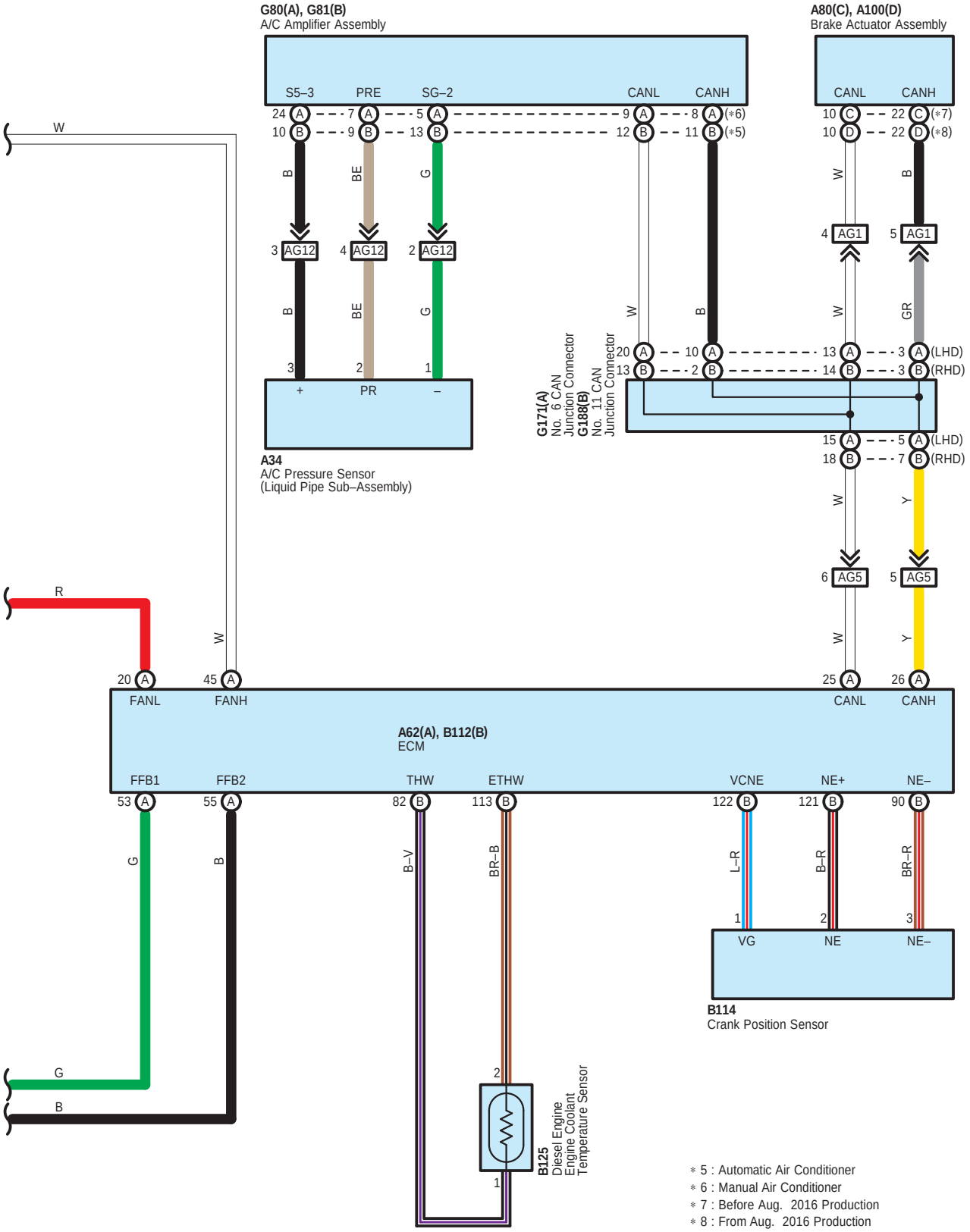
G80(A), G81(B)
A/C Amplifier Assembly
S5–3
PRE
SG–2
CANL
CANH
A80(C), A100(D)
Brake Actuator Assembly
CANL
CANH
24 A
10 B
7 A
9 B
5 A
13 B
9 A
12 B
8 A (*6)
11 B (*5)
10 C
10 D
22 C (*7)
22 D (*8)
W
B
BE
G
3 AG12
4 AG12
2 AG12
4 AG1
5 AG1
GR
3
2
1
+
PR
–
A34
A/C Pressure Sensor
(Liquid Pipe Sub–Assembly)
G171(A)
No. 6 CAN
Junction Connector
G188(B)
No. 11 CAN
Junction Connector
20 A
13 B
10 A
2 B
13 A
14 B
3 A (LHD)
3 B (RHD)
15 A
18 B
5 A (LHD)
7 B (RHD)
Y
6 AG5
5 AG5
R
20 A
45 A
25 A
26 A
FANL
FANH
CANL
CANH
A62(A), B112(B)
ECM
FFB1
FFB2
THW
ETHW
VCNE
NE+
NE–
53 A
55 A
82 B
113 B
122 B
121 B
90 B
B–V
BR–B
L–R
B–R
BR–R
1
2
3
VG
NE
NE–
B114
Crank Position Sensor
B125
Diesel Engine
Engine Coolant
Temperature Sensor
* 5 : Automatic Air Conditioner
* 6 : Manual Air Conditioner
* 7 : Before Aug. 2016 Production
* 8 : From Aug. 2016 Production

A34
Black

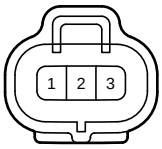

90980-10845

A51
Black

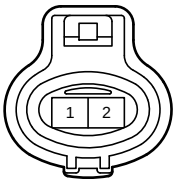

90980-10928

A52
Gray

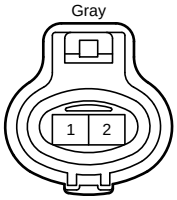

90980-10928

A62
Black

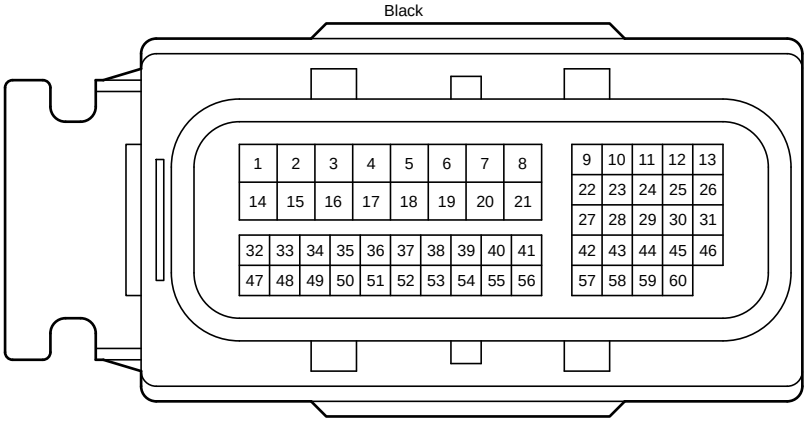

90980-12931

A80
Black

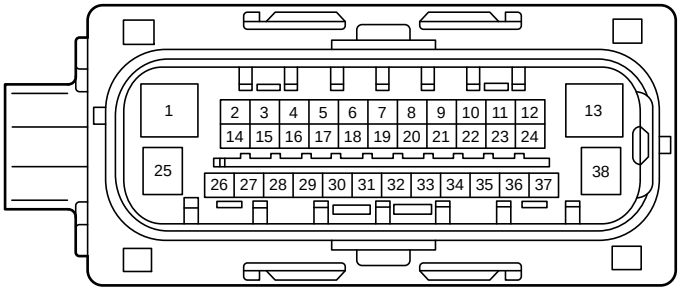

90980-12A95

A100
Black

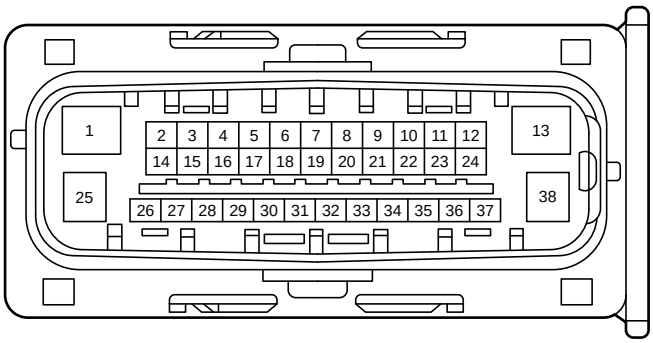

90980-12B01

B112
Black

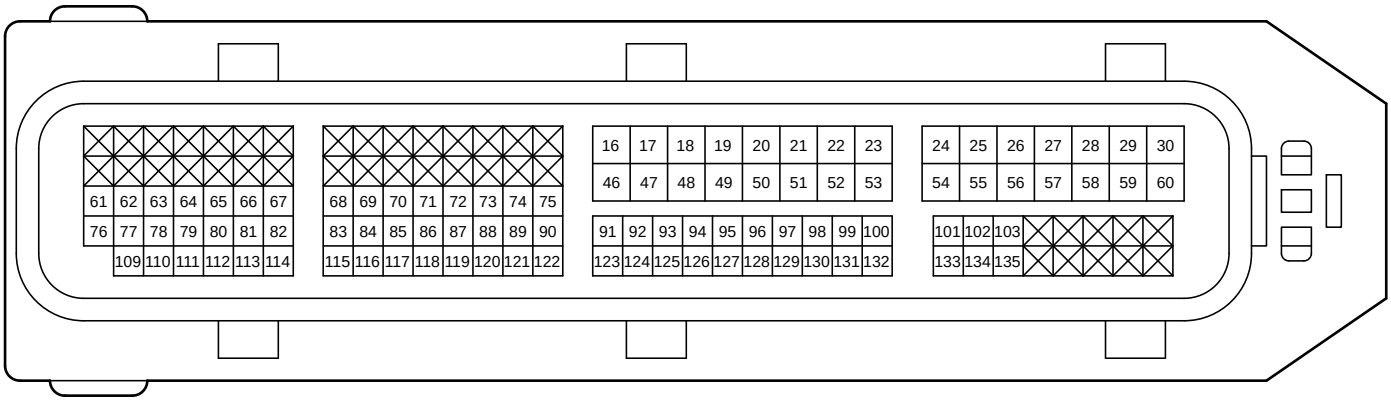

B114
Black

B125
Black

G80
Black

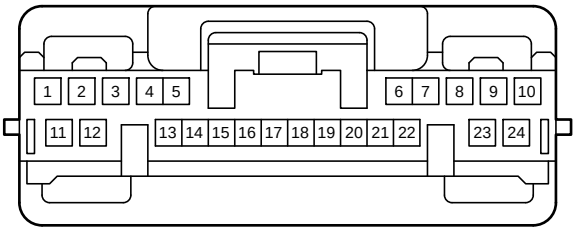

90980-12912

G81
White

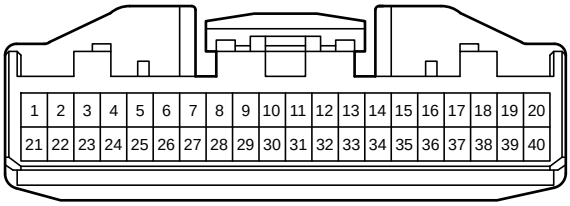

90980-12557

G171
White

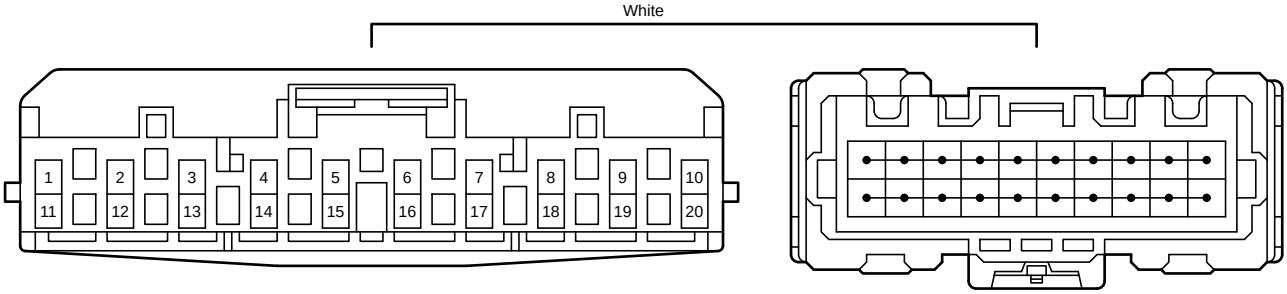

90980-12A58

G188
Gray

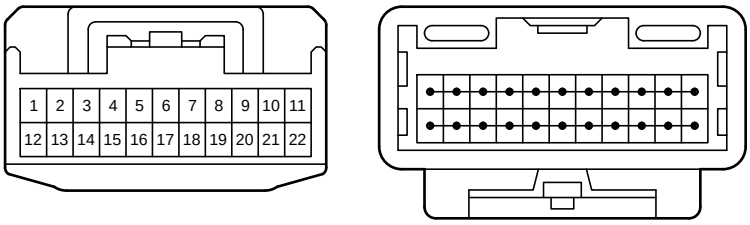

90980-12372

AG1
Blue

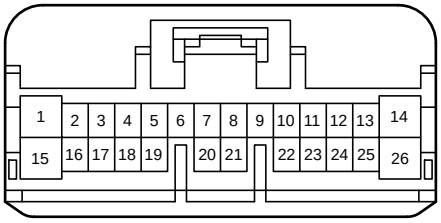

90980-12771

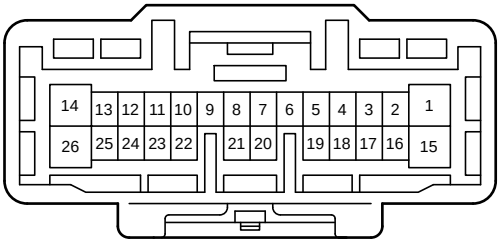

90980-12770

AG5
White

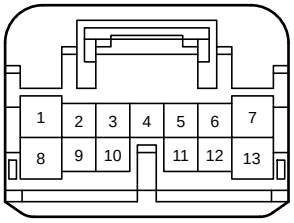

90980-12767

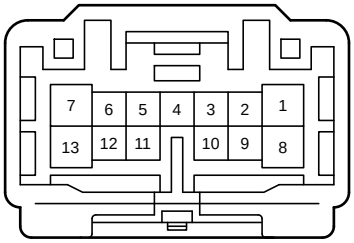

90980-12766

AG12
Blue

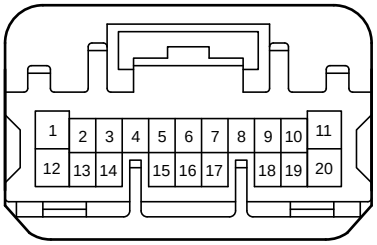

90980-12741

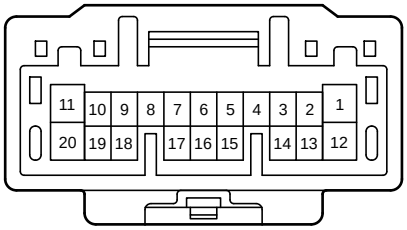

90980-12740