(Cont. next page)

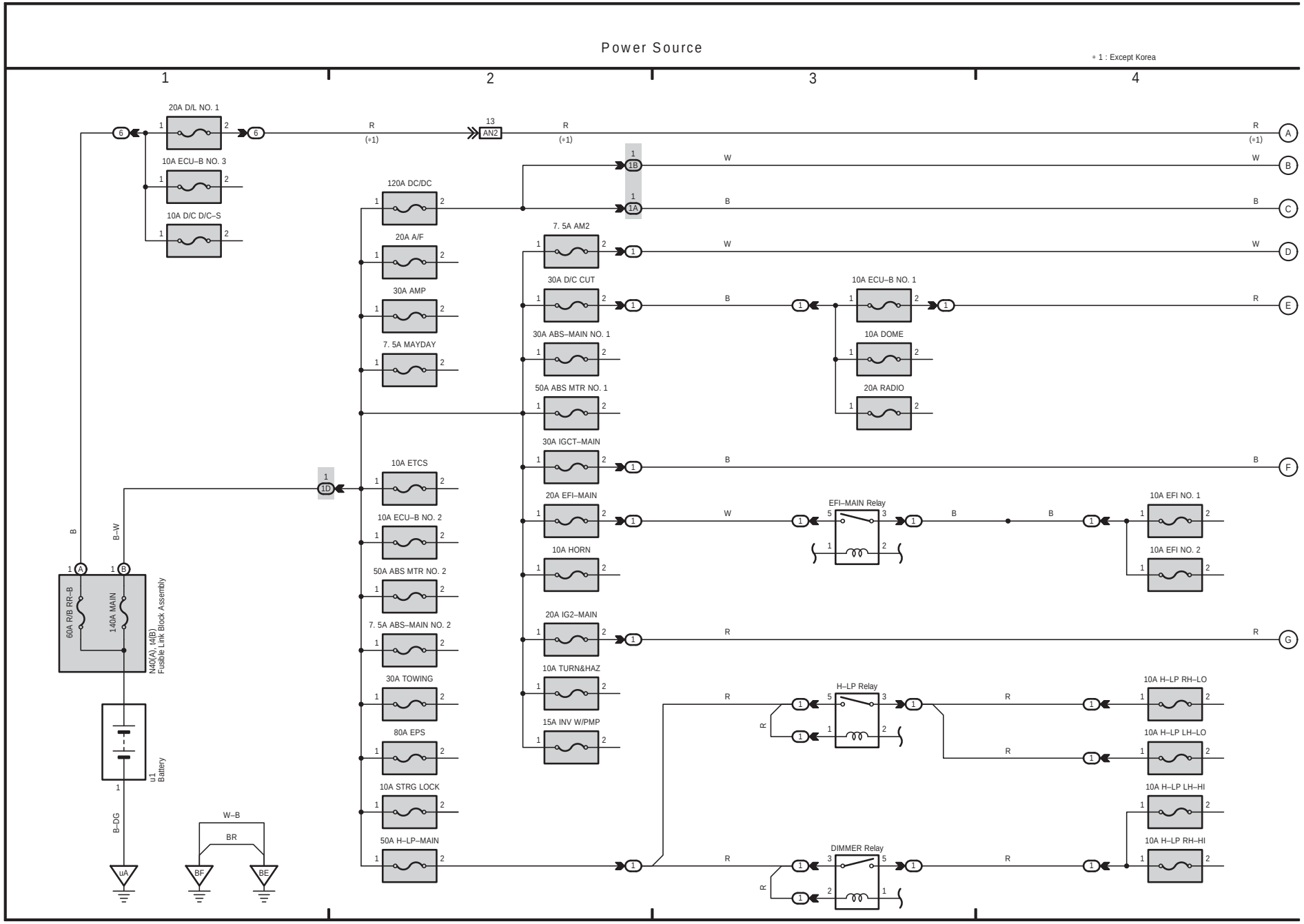

(Cont. next page)

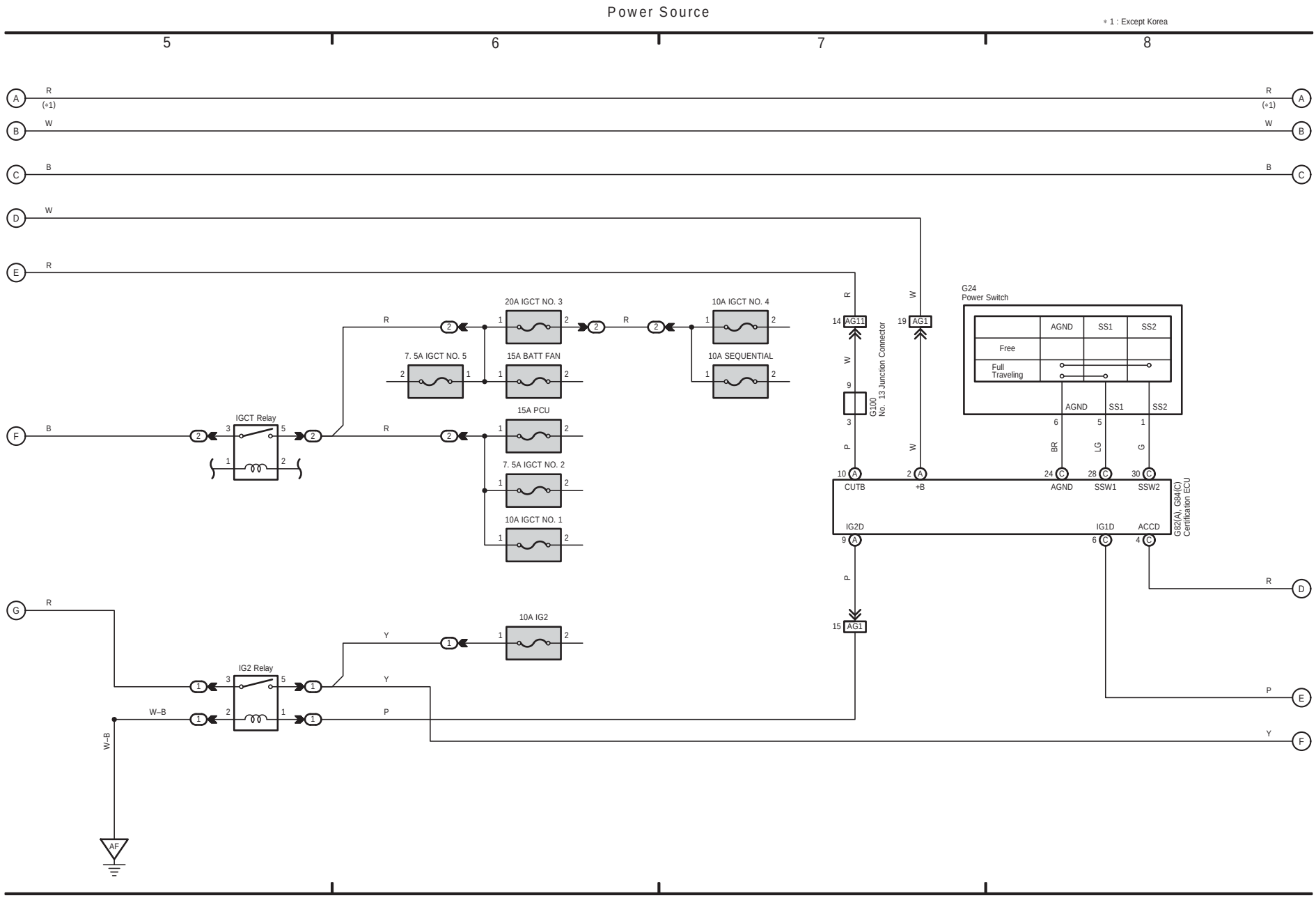

(Cont. next page)

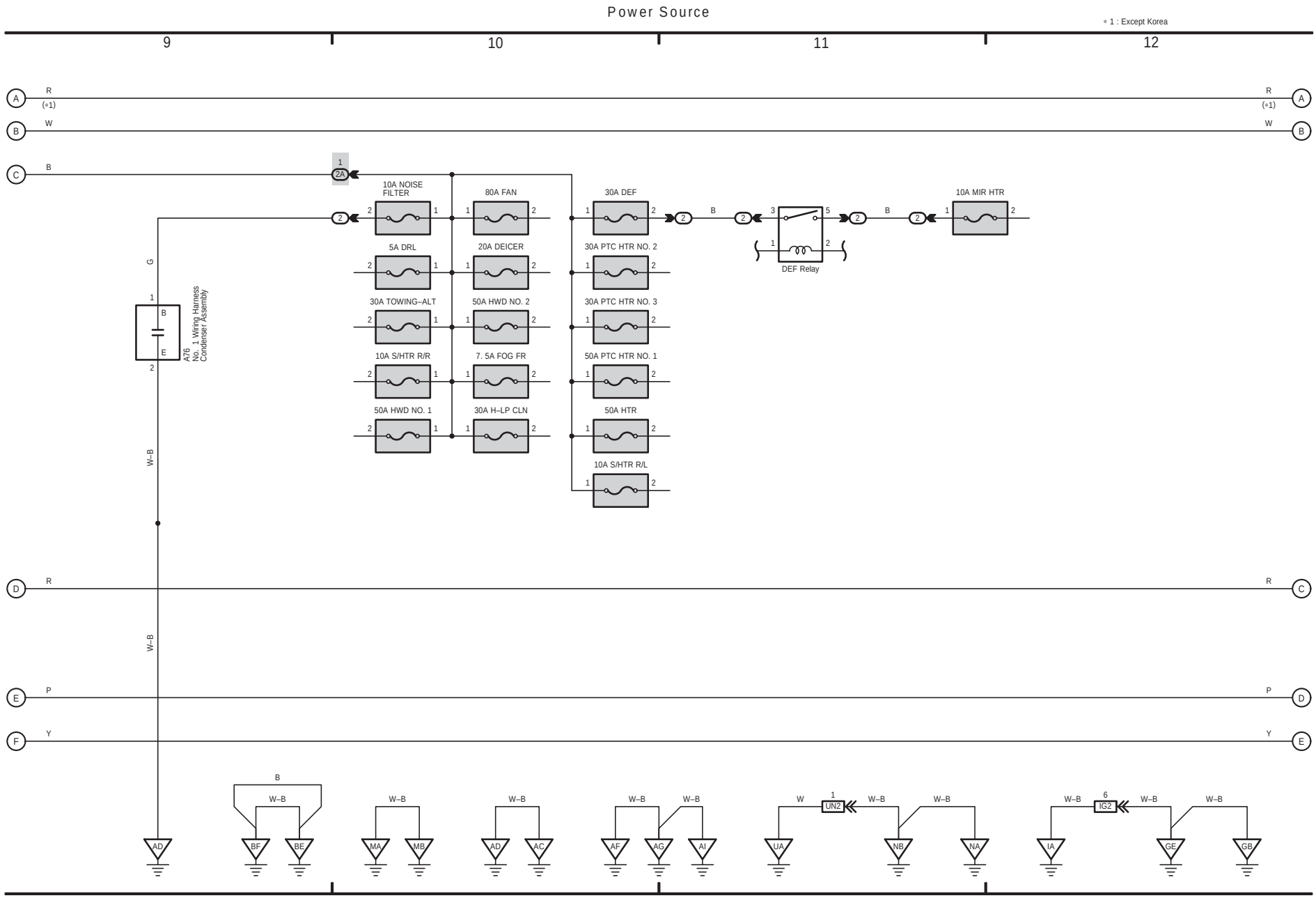

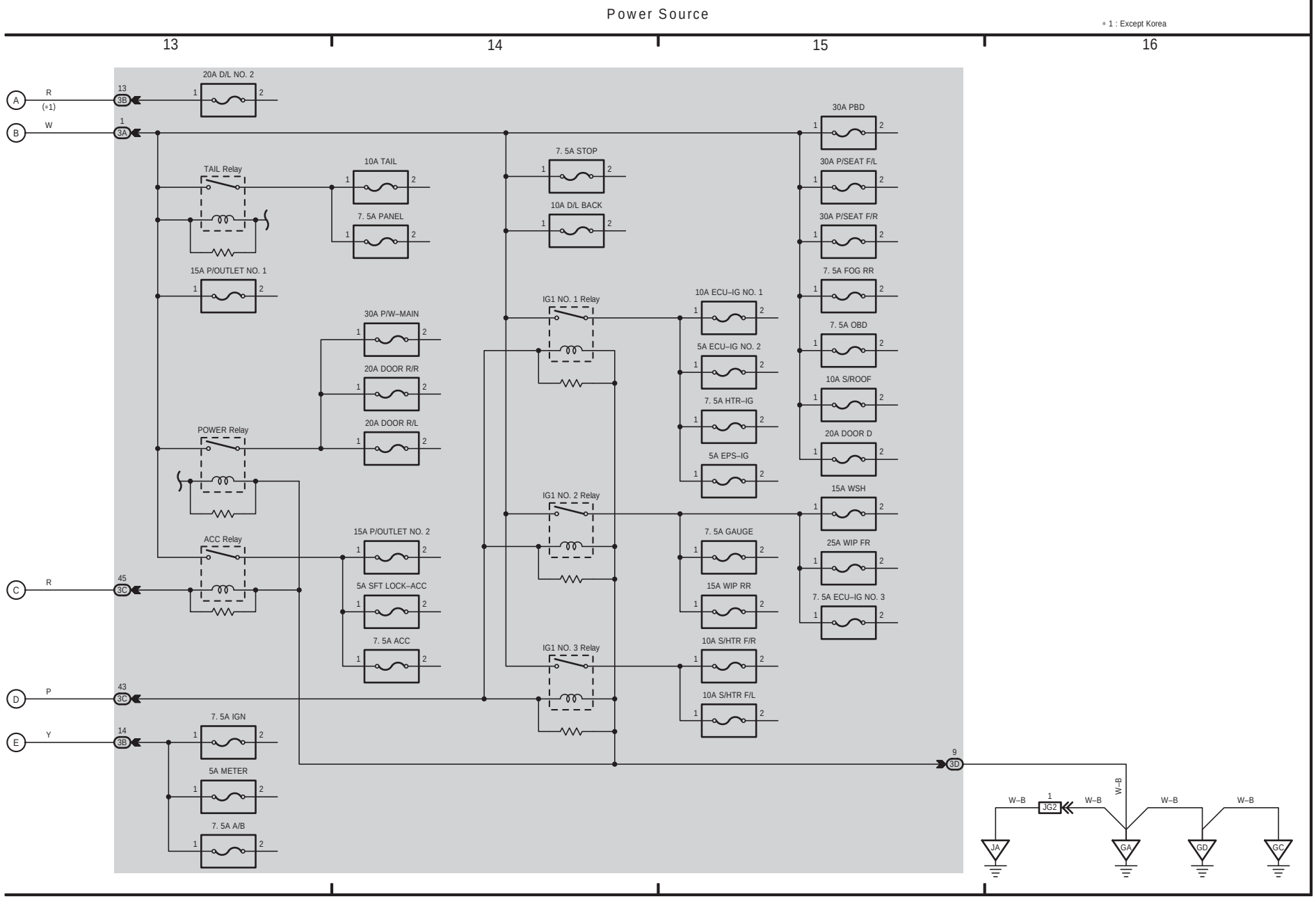
Power Source
* 1 : Except Korea
13
14
15
16
A
R
(*1)
B
W
C
R
D
P
E
Y
13
3B
1
3A
45
3C
43
3C
14
3B
9
3D
20A D/L NO. 2
TAIL Relay
10A TAIL
7. 5A PANEL
15A P/OUTLET NO. 1
30A P/W–MAIN
20A DOOR R/R
20A DOOR R/L
POWER Relay
ACC Relay
15A P/OUTLET NO. 2
5A SFT LOCK–ACC
7. 5A ACC
7. 5A IGN
5A METER
7. 5A A/B
7. 5A STOP
10A D/L BACK
IG1 NO. 1 Relay
IG1 NO. 2 Relay
IG1 NO. 3 Relay
10A ECU–IG NO. 1
5A ECU–IG NO. 2
7. 5A HTR–IG
5A EPS–IG
7. 5A GAUGE
15A WIP RR
10A S/HTR F/R
10A S/HTR F/L
30A PBD
30A P/SEAT F/L
30A P/SEAT F/R
7. 5A FOG RR
7. 5A OBD
10A S/ROOF
20A DOOR D
15A WSH
25A WIP FR
7. 5A ECU–IG NO. 3
W–B
1
JG2
W–B
W–B
W–B
W–B
JA
GA
GD
GC