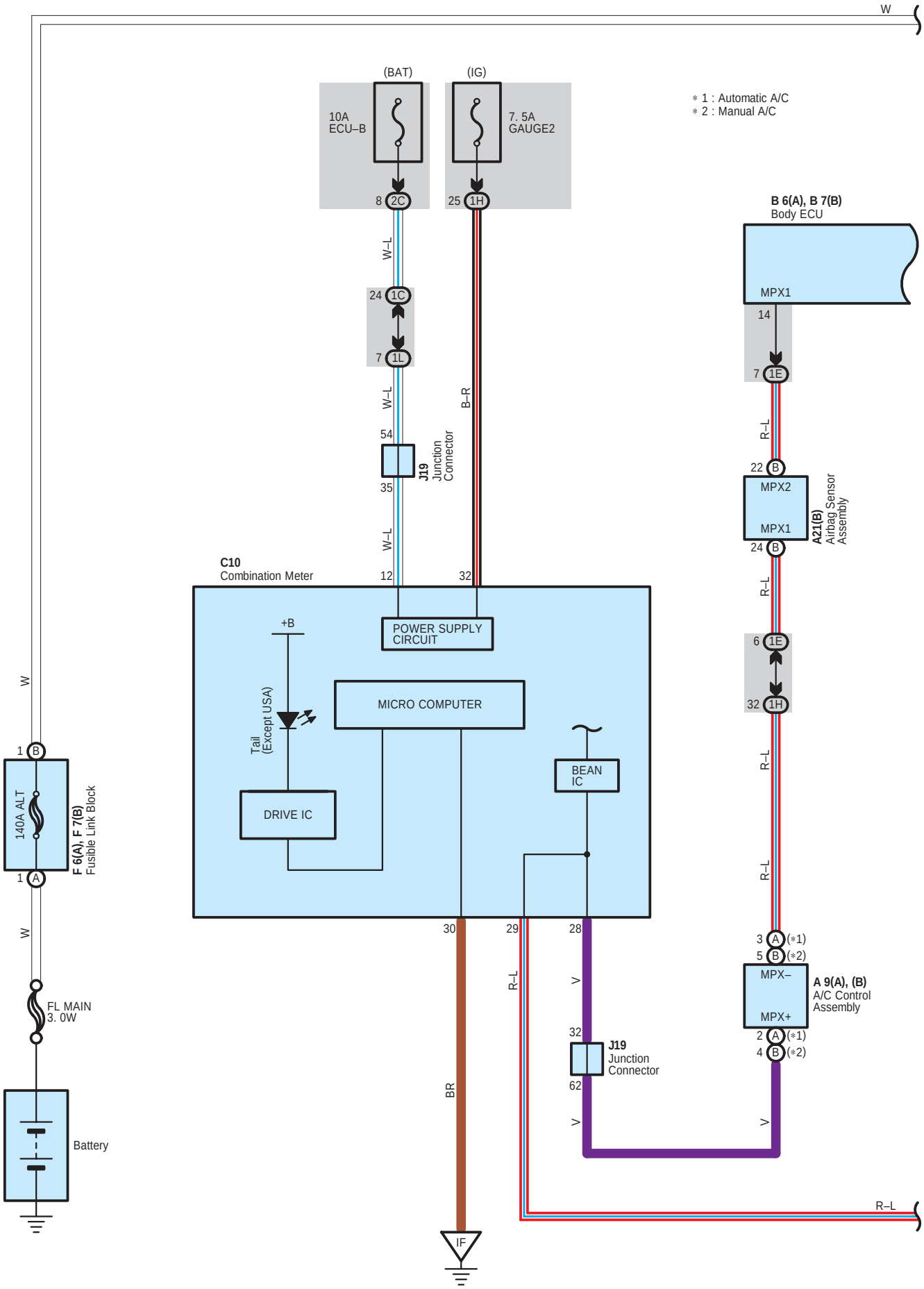
W
(BAT)
(IG)
10A
ECU–B
7. 5A
GAUGE2
8 2C
25 1H
∗ 1 : Automatic A/C
∗ 2 : Manual A/C
B 6(A), B 7(B)
Body ECU
MPX1
14
7 1E
W–L
24 1C
7 1L
W–L
B–R
54
J19
Junction
Connector
35
W–L
R–L
22 B
MPX2
MPX1
A21(B)
Airbag Sensor
Assembly
24 B
R–L
C10
Combination Meter
12
32
+B
POWER SUPPLY
CIRCUIT
6 1E
32 1H
Tail
(Except USA)
MICRO COMPUTER
BEAN
IC
DRIVE IC
R–L
R–L
W
1 B
140A ALT
F 6(A), F 7(B)
Fusible Link Block
1 A
30
29
28
3 A (∗1)
5 B (∗2)
MPX–
MPX+
A 9(A), (B)
A/C Control
Assembly
W
R–L
V
32
J19
Junction
Connector
62
2 A (∗1)
4 B (∗2)
FL MAIN
3. 0W
BR
V
V
Battery
R–L
IF

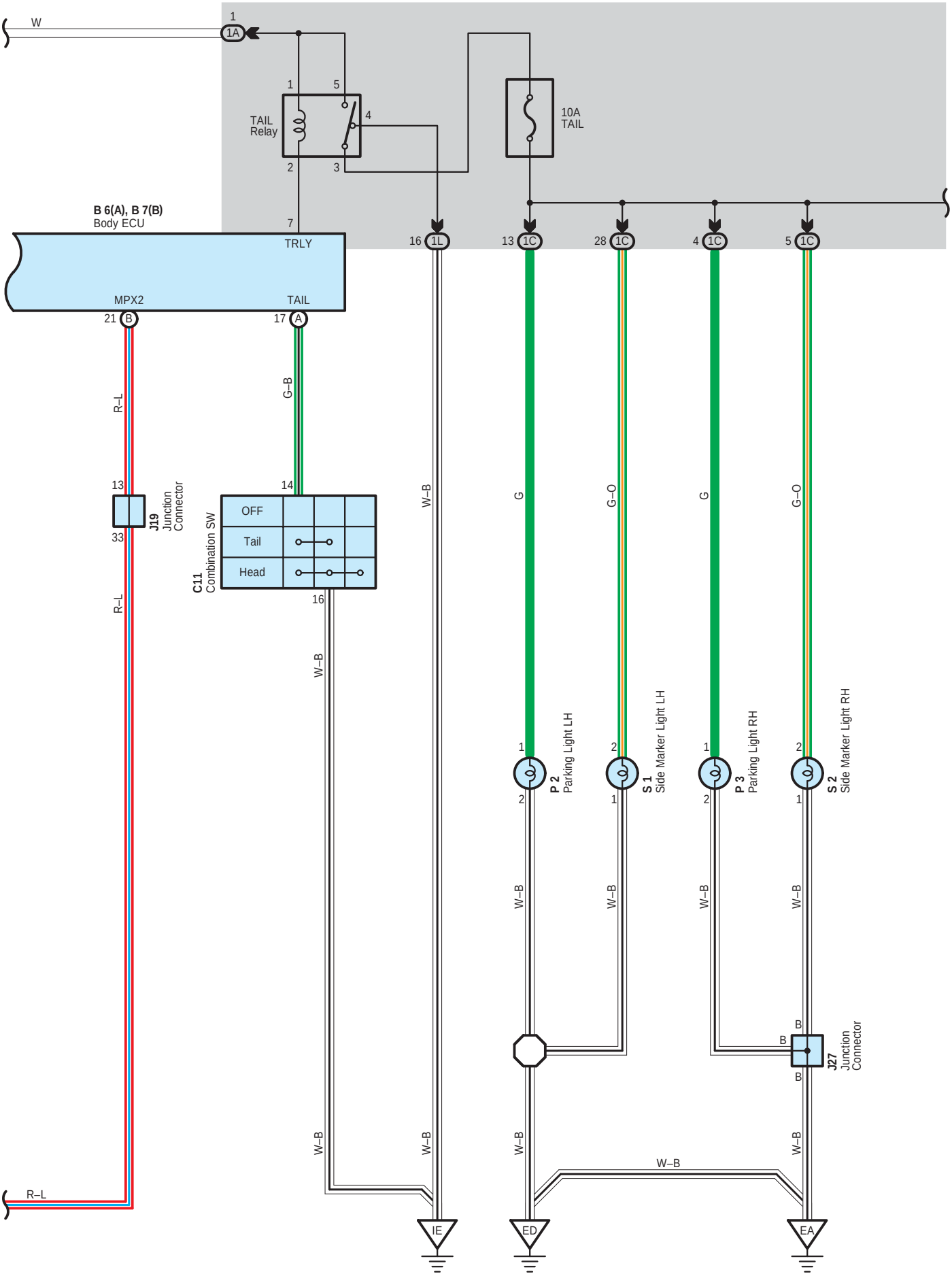
W
1
1A
TAIL
Relay
1
5
4
2
3
10A
TAIL
B 6(A), B 7(B)
Body ECU
7
TRLY
MPX2
TAIL
21 B
17 A
16 1L
13 1C
28 1C
4 1C
5 1C
R–L
G–B
13
J19
Junction
Connector
33
14
C11
Combination SW
OFF
Tail
Head
16
W–B
G
G–O
G
G–O
P 2
Parking Light LH
S 1
Side Marker Light LH
P 3
Parking Light RH
S 2
Side Marker Light RH
B
J27
Junction
Connector
IE
ED
EA

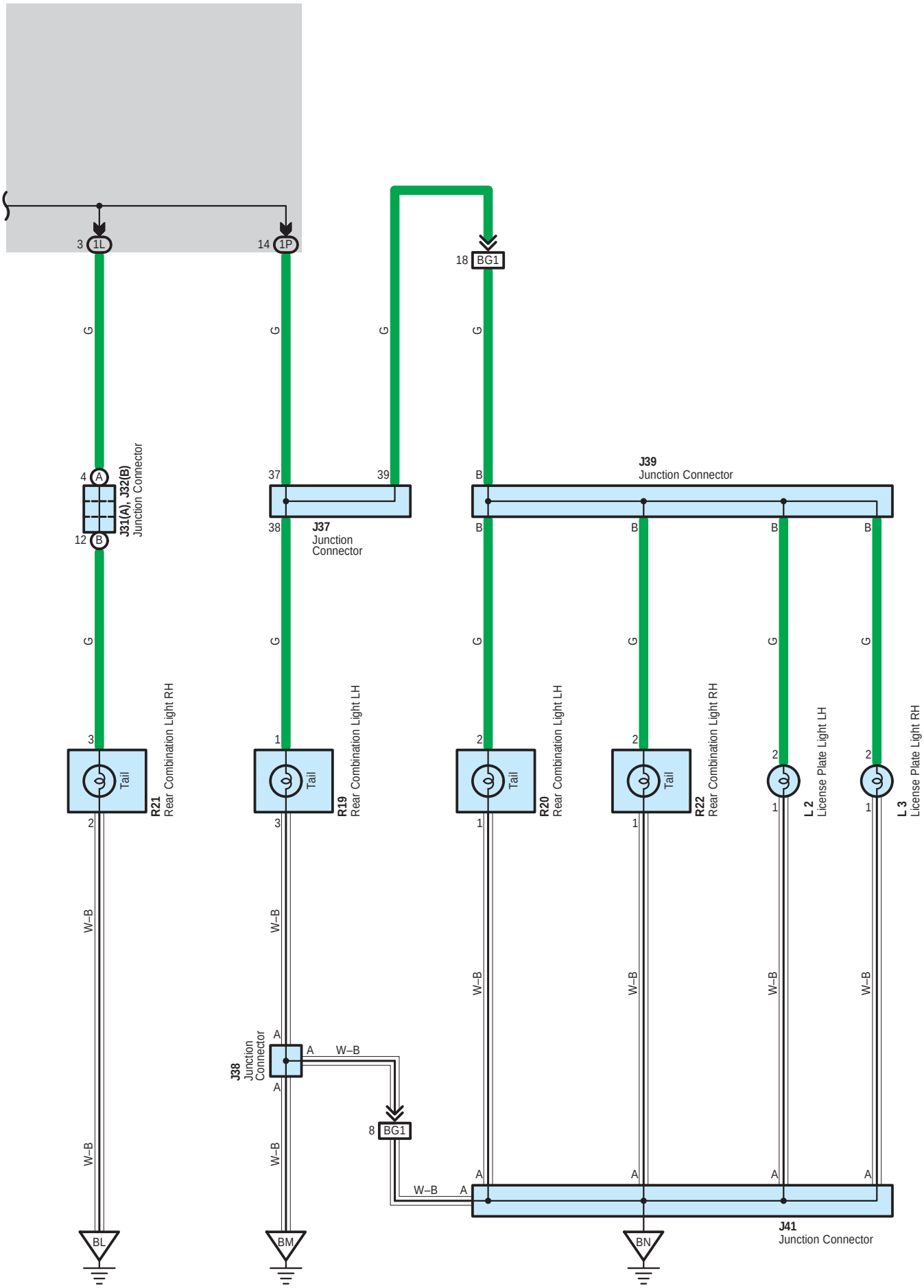
3 1L
14 1P
18 BG1
G
4 A
12 B
J31(A), J32(B)
Junction Connector
37
39
38
J37
Junction
Connector
B
J39
Junction Connector
3
R21
Rear Combination Light RH
Tail
2
1
R19
Rear Combination Light LH
3
2
R20
Rear Combination Light LH
1
2
R22
Rear Combination Light RH
1
2
L 2
License Plate Light LH
1
2
L 3
License Plate Light RH
1
W–B
A
J38
Junction
Connector
8 BG1
J41
Junction Connector
BL
BM
BN

: Parts Location

Code		See Page	Code		See Page	Code	See Page
A9	A	38	J19		40	L3	43
	B	38	J27		40	P2	37
A21	B	38	J31	A	40	P3	37
B6	A	38	J32	B	40	R19	45
B7	B	38	J37		43	R20	45
C10		39	J38		43	R21	45
C11		39	J39		43	R22	45
F6	A	36	J41		43	S1	37
F7	B	36	L2		43	S2	37

: Junction Block and Wire Harness Connector

Code	See Page	Junction Block and Wire Harness (Connector Location)
1A	31	Engine Room Main Wire and Driver Side J/B (Lower Finish Panel)
1C		
1E	31	Instrument Panel Wire and Driver Side J/B (Lower Finish Panel)
1H	30	
1L	31	
1P	31	Floor No.1 Wire and Driver Side J/B (Lower Finish Panel)
2C	24	Engine Room Main Wire and Engine Room J/B (Engine Compartment Left)

: Connector Joining Wire Harness and Wire Harness

Code	See Page	Joining Wire Harness and Wire Harness (Connector Location)
BG1	55	Back Door No.1 Wire and Floor No.1 Wire (Left Rear Quarter Panel)

: Ground Points

Code	See Page	Ground Points Location
EA	50	Front Side of the Right Fender Apron
ED	50	Front Side of the Left Fender Apron
IE	52	Left Kick Panel
IF	52	Instrument Panel Brace LH
BL	54	Right Rear Quarter Panel
BM	54	Left Rear Quarter Panel
BN	54	Left Side of the Back Door