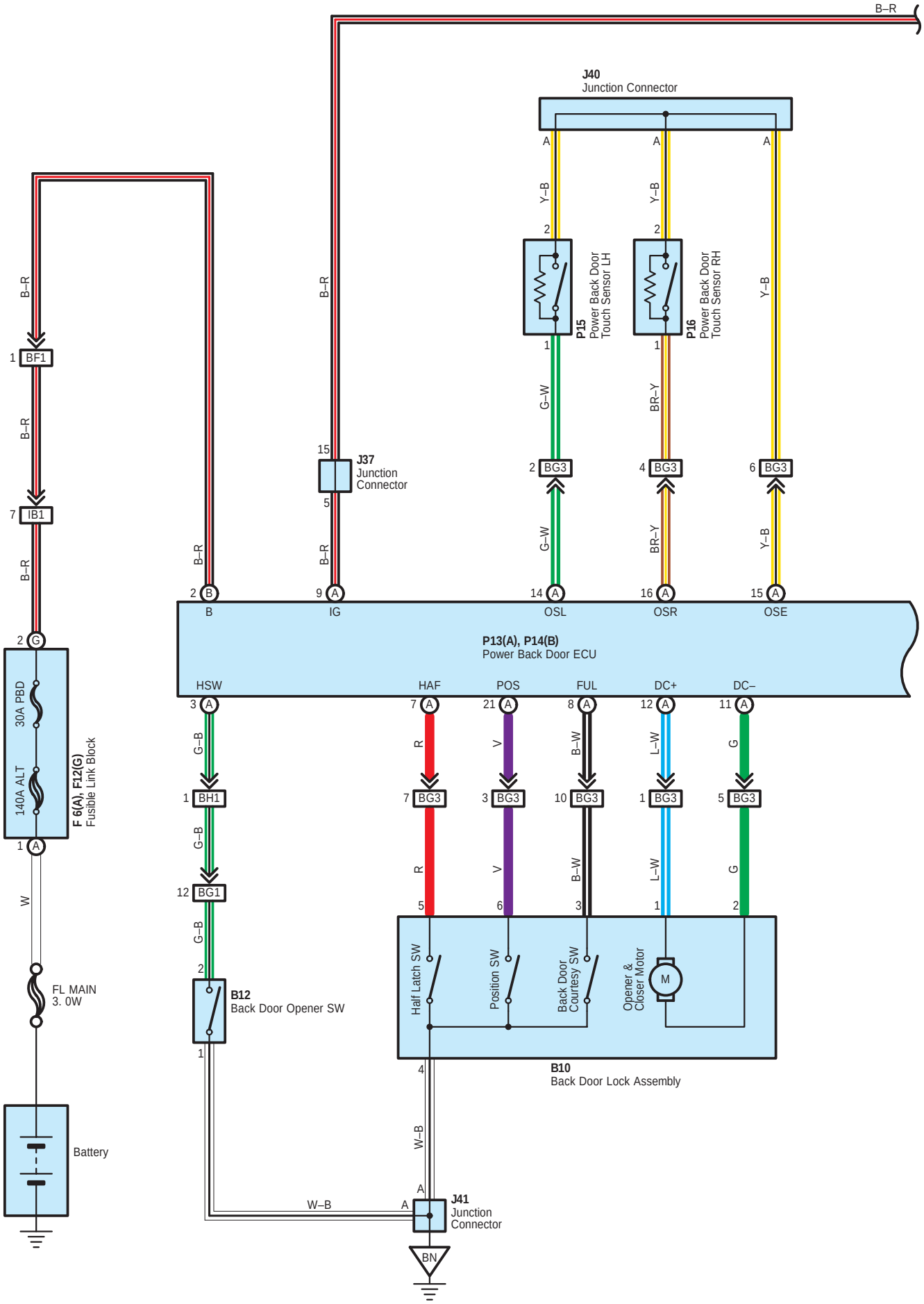
B–R
J40
Junction Connector
A
Y–B
2
P15
Power Back Door
Touch Sensor LH
P16
Power Back Door
Touch Sensor RH
1
G–W
BR–Y
BG3
2
4
6
14
16
15
OSL
OSR
OSE
J37
Junction
Connector
15
5
9
IG
1
BF1
7
IB1
2
G
B
P13(A), P14(B)
Power Back Door ECU
HSW
HAF
POS
FUL
DC+
DC–
3
7
21
8
12
11
G–B
R
V
B–W
L–W
G
BH1
BG1
10
F 6(A), F12(G)
Fusible Link Block
30A PBD
140A ALT
W
FL MAIN
3. 0W
B12
Back Door Opener SW
Half Latch SW
Position SW
Back Door
Courtesy SW
Opener &
Closer Motor
M
B10
Back Door Lock Assembly
W–B
J41
Junction
Connector
BN
Battery

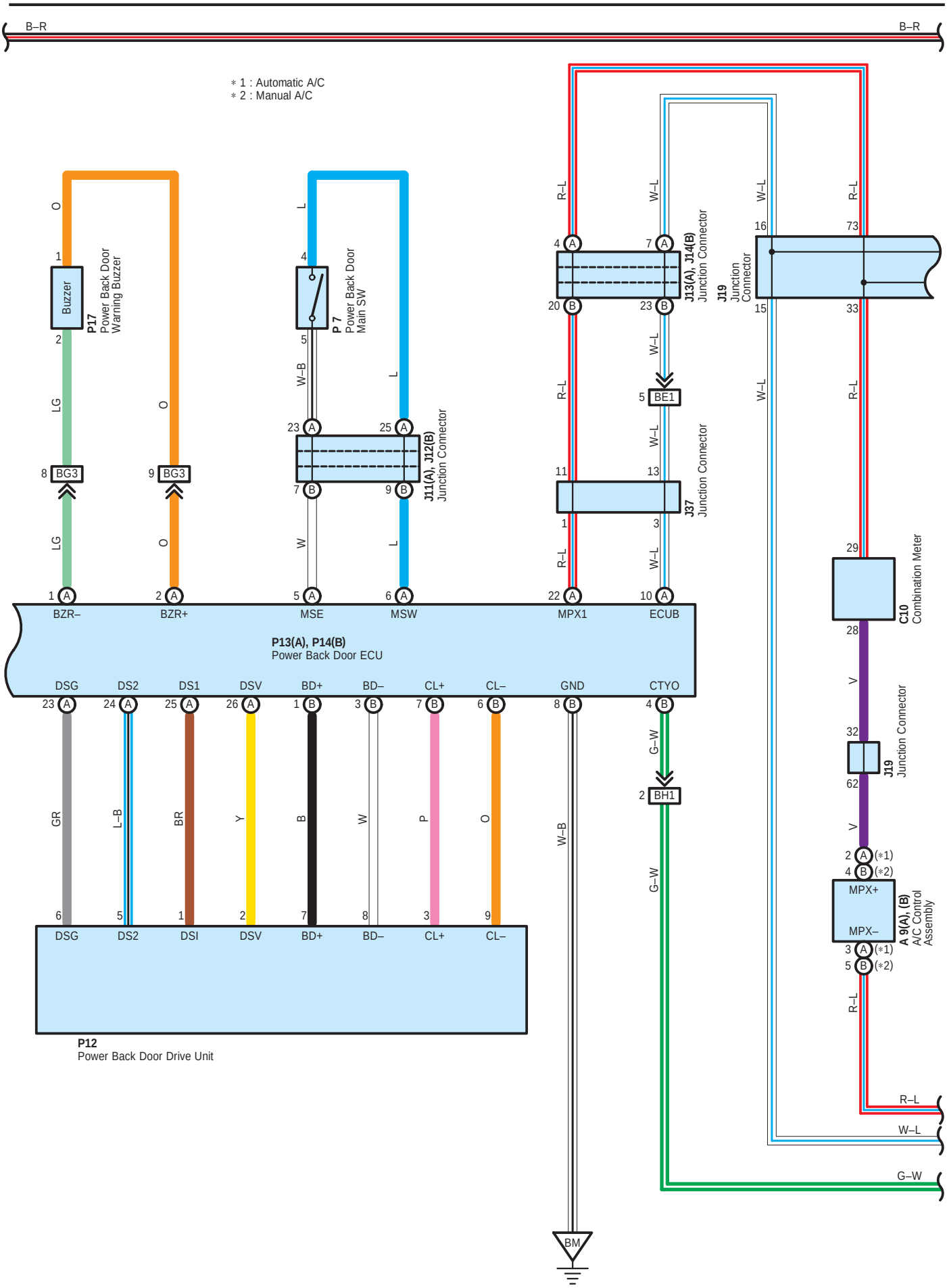
B–R
B–R
* 1 : Automatic A/C
* 2 : Manual A/C
Buzzer
P17
Power Back Door
Warning Buzzer
P 7
Power Back Door
Main SW
J11(A), J12(B)
Junction Connector
J13(A), J14(B)
Junction Connector
J19
Junction
Connector
J37
Junction Connector
C10
Combination Meter
J19
Junction Connector
A 9(A), (B)
A/C Control
Assembly
P13(A), P14(B)
Power Back Door ECU
P12
Power Back Door Drive Unit
BZR–
BZR+
MSE
MSW
MPX1
ECUB
DSG
DS2
DS1
DSV
BD+
BD–
CL+
CL–
GND
CTYO
BG3
BE1
BH1
BM
MPX+
MPX–

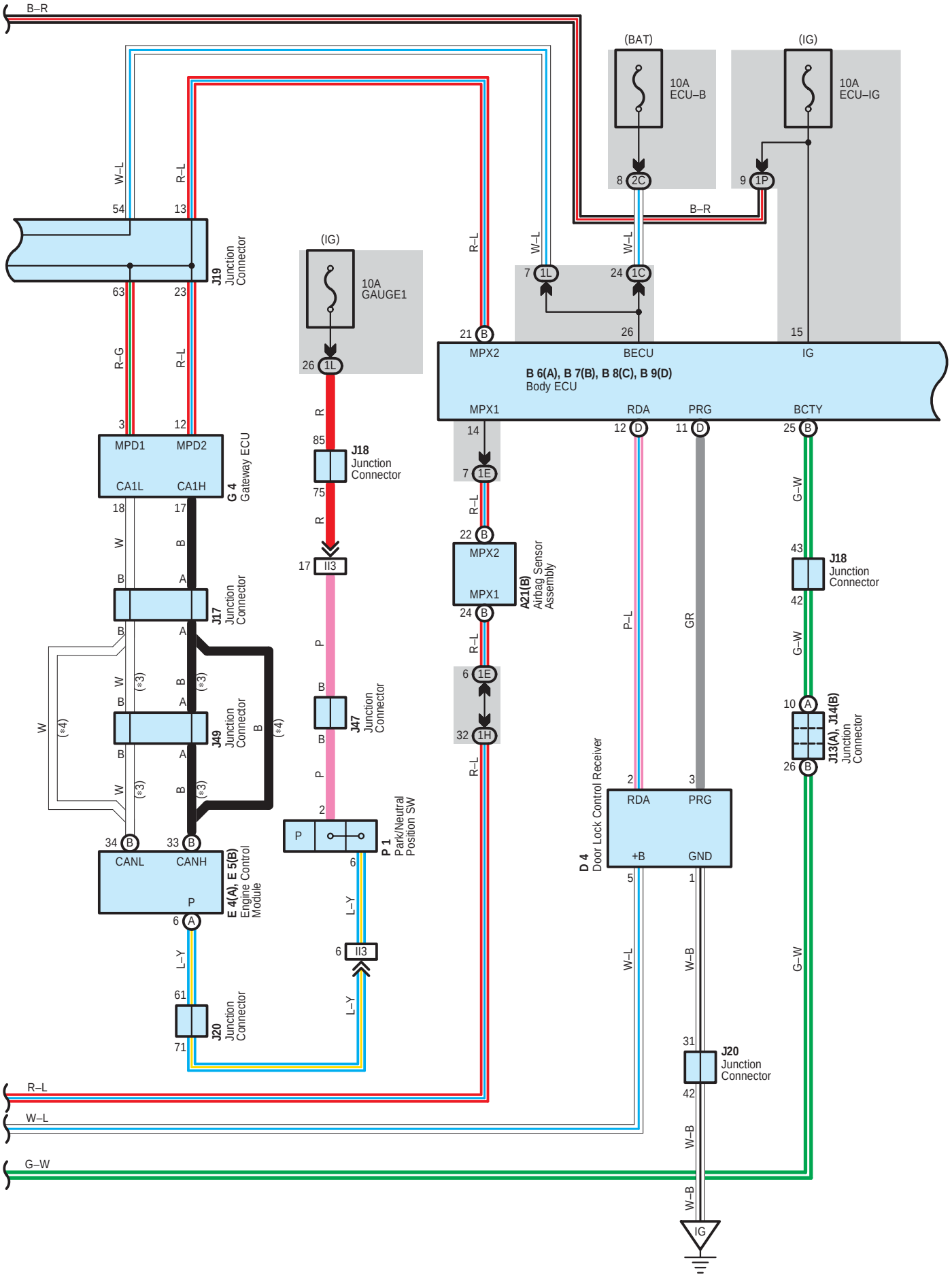
B–R
(BAT)
10A
ECU–B
(IG)
10A
ECU–IG
8 2C
9 1P
B–R
W–L
R–L
54
13
J19
Junction
Connector
63
23
R–G
R–L
(IG)
10A
GAUGE1
26 1L
R
85
J18
Junction
Connector
75
R
17 II3
P
B
J47
Junction
Connector
B
P
2
P
P 1
Park/Neutral
Position SW
6
L–Y
6 II3
L–Y
3
12
MPD1
MPD2
CA1L
CA1H
G 4
Gateway ECU
18
17
W
B
B
A
J17
Junction
Connector
B
A
W
(*3)
B
(*3)
B
A
W
(*4)
J49
Junction
Connector
B
(*4)
B
A
W
(*3)
B
(*3)
34 B
33 B
CANL
CANH
P
E 4(A), E 5(B)
Engine Control
Module
6 A
L–Y
61
J20
Junction
Connector
71
R–L
W–L
G–W
21 B
MPX2
BECU
IG
B 6(A), B 7(B), B 8(C), B 9(D)
Body ECU
MPX1
RDA
PRG
BCTY
14
12 D
11 D
25 B
7 1E
R–L
22 B
MPX2
MPX1
A21(B)
Airbag Sensor
Assembly
24 B
R–L
6 1E
32 1H
R–L
P–L
GR
2
3
RDA
PRG
+B
GND
D 4
Door Lock Control Receiver
5
1
W–L
W–B
31
J20
Junction
Connector
42
W–B
W–B
IG
G–W
43
J18
Junction
Connector
42
G–W
10 A
J13(A), J14(B)
Junction
Connector
26 B
G–W

＊3 : w/ VSC
＊4 : w/o VSC

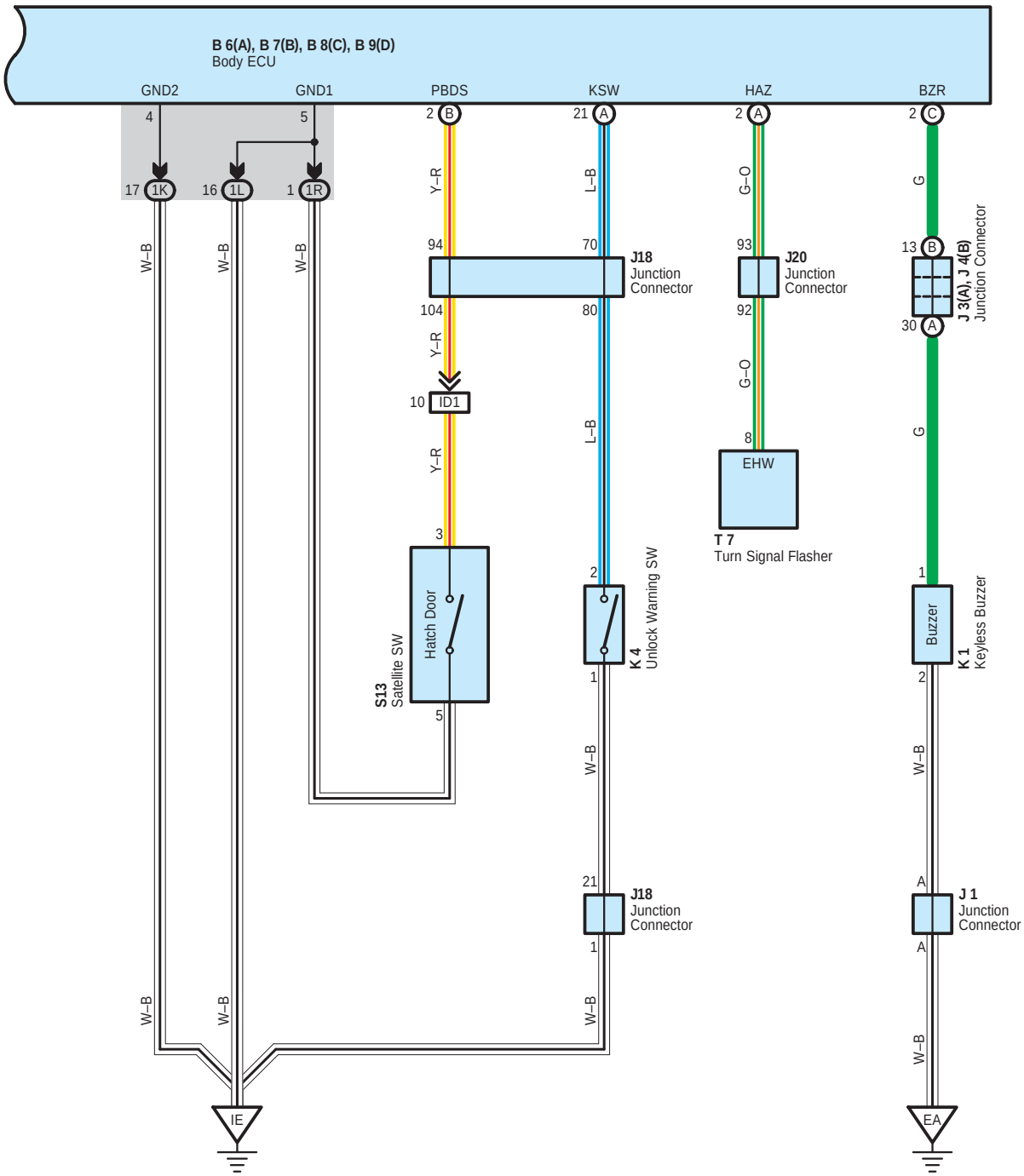

Power Back Door

System Outline

1. The Main Opening–and–Closing Operations

(1) By pushing the remote control SW, the automatic opening and closing of the back door can be carried out.

(2) By pushing the operation SW formed in overhead console, the automatic opening and closing of the back door can be carried out.

(3) Assistant operation:
By pulling the back door from full open position, the automatic closing of the back door can be carried out.

* The automatic opening (Closing) operation of the back door is possible only when the power back door main SW in the instrument panel of driver's seat part in ON.

2. Consideration of Safety

(1) The power back door touch sensor is adopted.
If the power back door touch sensor which is arranged on the end of the back door detect something pinching or obstacle during the automatic operation, the door will be reversed in full open direction.

(2) If something pinching or obstacle in the back door is detected by speed change of the move of the back door during the automatic operation, the door will be reversed in opposite direction of the advance direction.

(3) If the remote control SW or the satellite SW is operated for someone feel danger, etc. during the automatic operation, the door will be reversed in opposite direction of the advance direction.

○ : Parts Location

Code		See Page	Code		See Page	Code		See Page
A9	A	38	G4		39	J47		40
	B	38	J1		37	J49		40
A21	B	38	J3	A	40	K1		37
B6	A	38	J4	B	40	K4		40
B7	B	38	J11	A	40	P1		37
B8	C	38	J12	B	40	P7		41
B9	D	38	J13	A	40	P12		44
B10		42	J14	B	40	P13	A	44
B12		42	J17		40	P14	B	44
C10		39	J18		40	P15		44
D4		39	J19		40	P16		44
E4	A	39	J20		40	P17		44
E5	B	39	J37		43	S13		45
F6	A	36	J40		43	T7		41
F12	G	36	J41		43			

: Junction Block and Wire Harness Connector

Code	See Page	Junction Block and Wire Harness (Connector Location)
1C	31	Engine Room Main Wire and Driver Side J/B (Lower Finish Panel)
1E	31	Instrument Panel Wire and Driver Side J/B (Lower Finish Panel)
1H	30	
1K	31	
1L		
1P	31	Floor No.1 Wire and Driver Side J/B (Lower Finish Panel)
1R	31	Roof Wire and Driver Side J/B (Lower Finish Panel)
2C	24	Engine Room Main Wire and Engine Room J/B (Engine Compartment Left)

: **Connector Joining Wire Harness and Wire Harness**

Code	See Page	Joining Wire Harness and Wire Harness (Connector Location)
IB1	52	Engine Room Main Wire and Floor No.1 Wire (Left Cowl Side Panel)
ID1	52	Roof Wire and Instrument Panel Wire (Near the Driver Side J/B)
II3	53	Engine Wire and Instrument Panel Wire (Right Kick Panel)
BE1	54	Floor No.1 Wire and Floor No.1 Wire (Left Rear Quarter Panel)
BF1		
BG1	55	Back Door No.1 Wire and Floor No.1 Wire (Left Rear Quarter Panel)
BG3		
BH1	55	Floor No.1 Wire and Floor No.1 Wire (Left Rear Quarter Panel)

: **Ground Points**

Code	See Page	Ground Points Location
EA	50	Front Side of the Right Fender Apron
IE	52	Left Kick Panel
IG	52	Right Kick Panel
BM	54	Left Rear Quarter Panel
BN	54	Left Side of the Back Door