# Back Door Closer

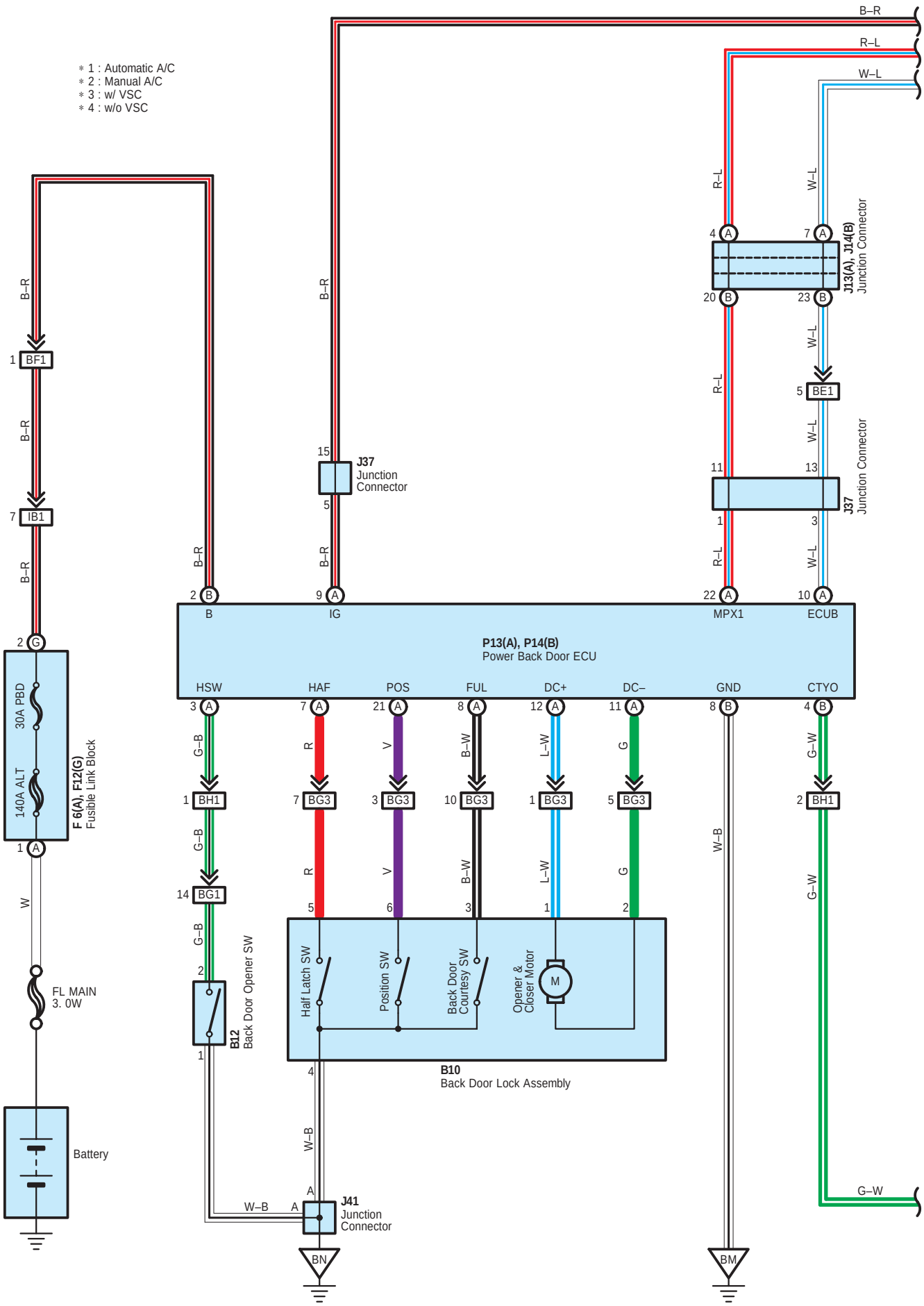

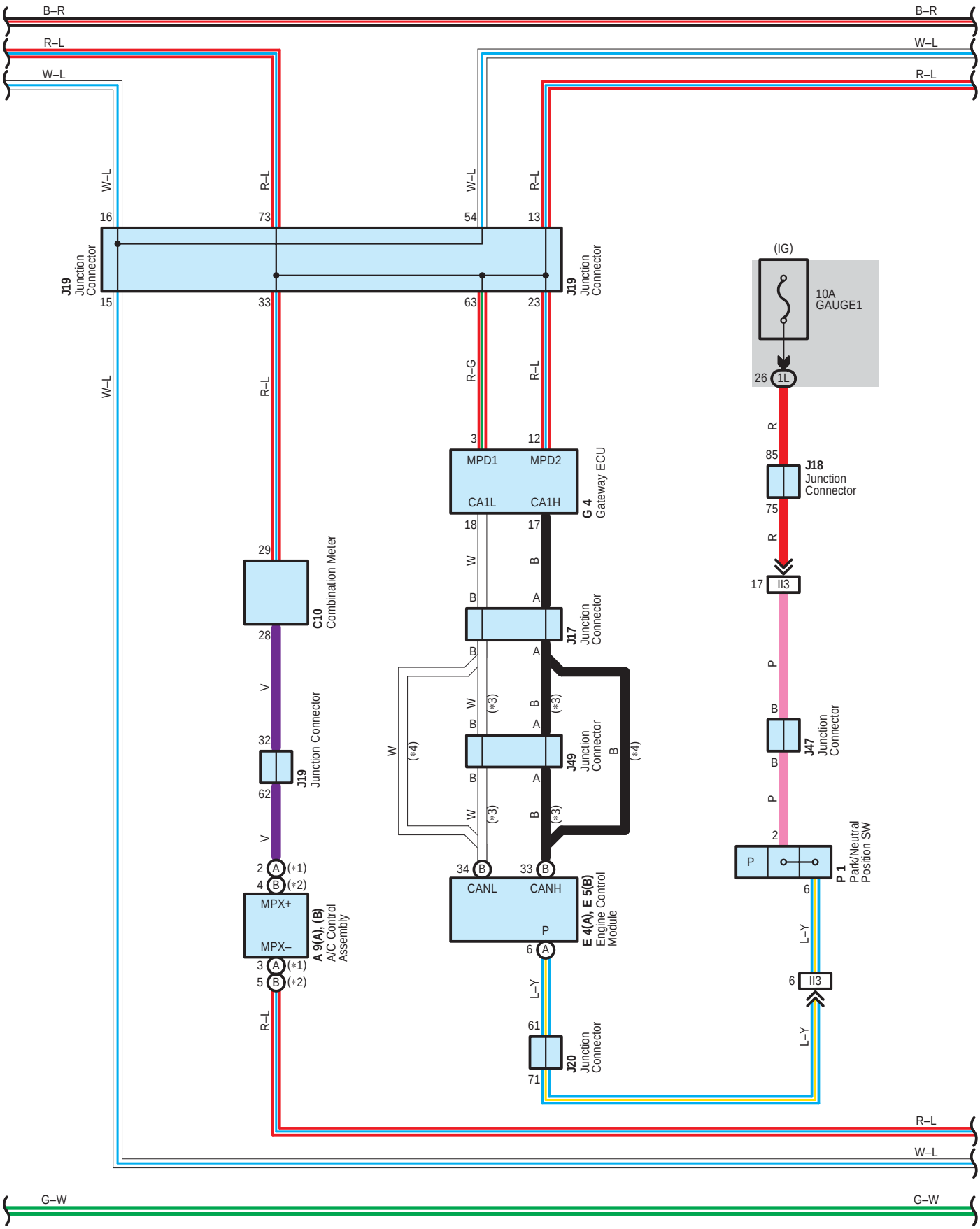
B–R
R–L
W–L
J19 Junction Connector
16
73
54
13
15
33
63
23
(IG)
10A GAUGE1
26 1L
R–G
3
12
MPD1
MPD2
CA1L
CA1H
G 4 Gateway ECU
18
17
85
J18 Junction Connector
75
17 II3
29
C10 Combination Meter
28
J17 Junction Connector
J49 Junction Connector
(*3)
(*4)
32
J19 Junction Connector
62
J47 Junction Connector
2 A (*1)
4 B (*2)
MPX+
MPX–
A 9(A), (B) A/C Control Assembly
3 A (*1)
5 B (*2)
34 B
33 B
CANL
CANH
P
E 4(A), E 5(B) Engine Control Module
6 A
L–Y
61
J20 Junction Connector
71
P 1 Park/Neutral Position SW
6 II3
G–W

# Back Door Closer

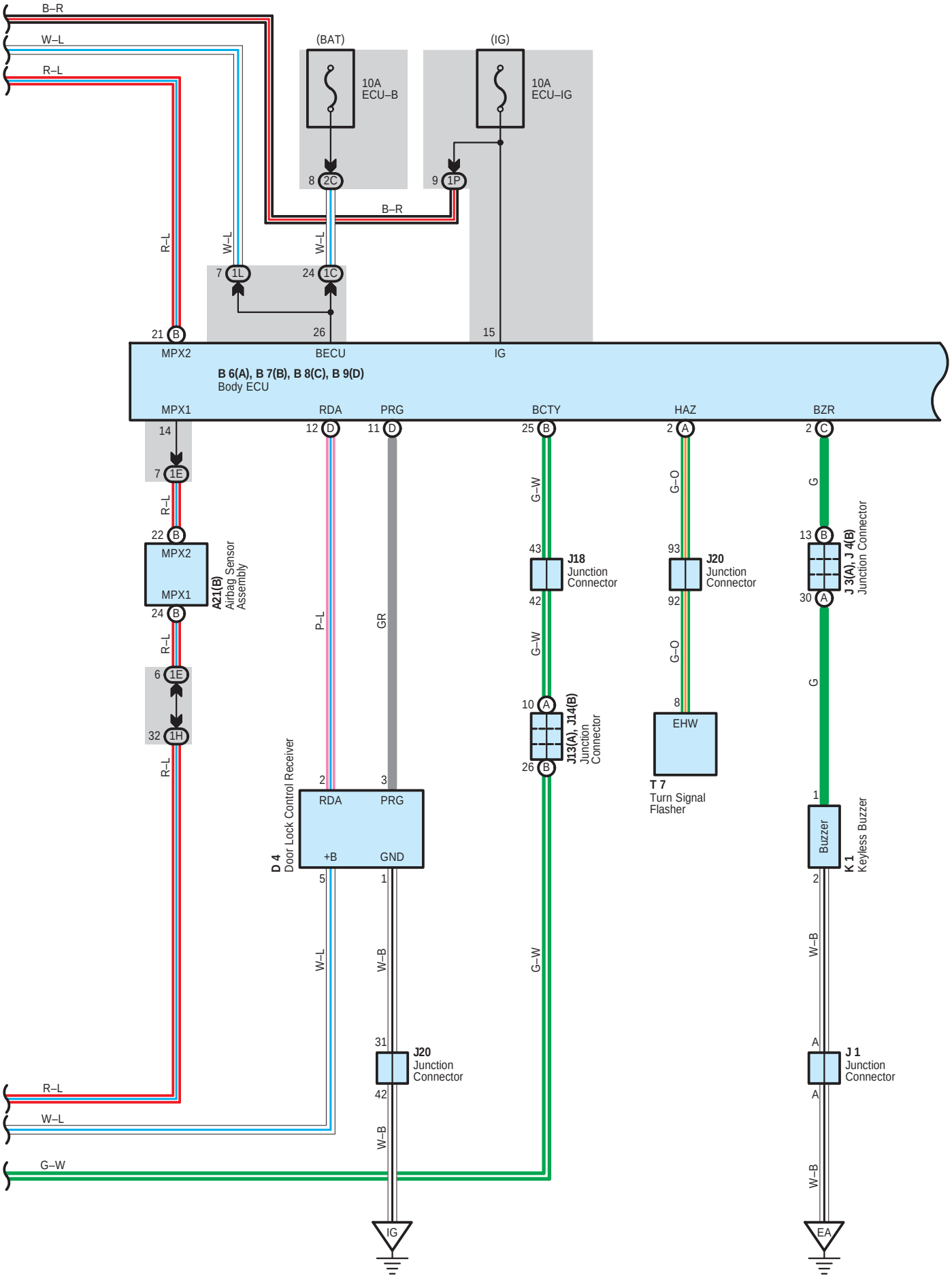

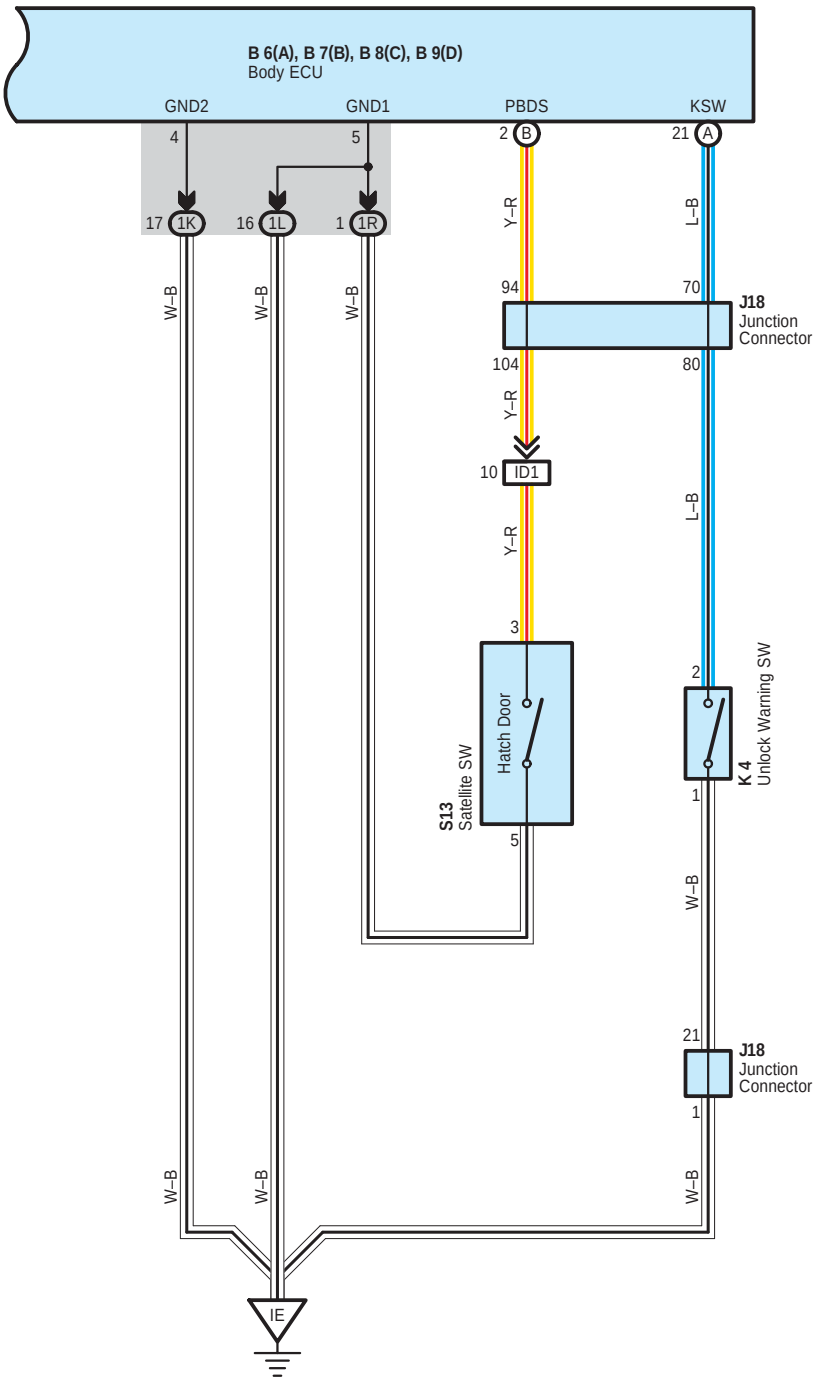
B 6(A), B 7(B), B 8(C), B 9(D)
Body ECU
GND2
GND1
PBDS
KSW
4
5
2 B
21 A
17 1K
16 1L
1 1R
Y–R
L–B
W–B
94
70
J18
Junction
Connector
104
80
Y–R
10 ID1
L–B
Y–R
3
2
S13
Satellite SW
Hatch Door
K 4
Unlock Warning SW
5
1
W–B
21
J18
Junction
Connector
1
W–B
W–B
W–B
IE

# Back Door Closer

**○ : Parts Location**

| Code | | See Page | Code | | See Page | Code | | See Page |
|---|---|---|---|---|---|---|---|---|
| A9 | A | 38 | E5 | B | 39 | J20 | | 40 |
| | B | 38 | F6 | A | 36 | J37 | | 43 |
| A21 | B | 38 | F12 | G | 36 | J41 | | 43 |
| B6 | A | 38 | G4 | | 39 | J47 | | 40 |
| B7 | B | 38 | J1 | | 37 | J49 | | 40 |
| B8 | C | 38 | J3 | A | 40 | K1 | | 37 |
| B9 | D | 38 | J4 | B | 40 | K4 | | 40 |
| B10 | | 42 | J13 | A | 40 | P1 | | 37 |
| B12 | | 42 | J14 | B | 40 | P13 | A | 44 |
| C10 | | 39 | J17 | | 40 | P14 | B | 44 |
| D4 | | 39 | J18 | | 40 | S13 | | 45 |
| E4 | A | 39 | J19 | | 40 | T7 | | 41 |

**⬭ : Junction Block and Wire Harness Connector**

| Code | See Page | Junction Block and Wire Harness (Connector Location) |
|---|---|---|
| 1C | 31 | Engine Room Main Wire and Driver Side J/B (Lower Finish Panel) |
| 1E | 31 | Instrument Panel Wire and Driver Side J/B (Lower Finish Panel) |
| 1H | 30 | |
| 1K | 31 | |
| 1L | | |
| 1P | 31 | Floor No.1 Wire and Driver Side J/B (Lower Finish Panel) |
| 1R | 31 | Roof Wire and Driver Side J/B (Lower Finish Panel) |
| 2C | 24 | Engine Room Main Wire and Engine Room J/B (Engine Compartment Left) |

**▭ : Connector Joining Wire Harness and Wire Harness**

| Code | See Page | Joining Wire Harness and Wire Harness (Connector Location) |
|---|---|---|
| IB1 | 52 | Engine Room Main Wire and Floor No.1 Wire (Left Cowl Side Panel) |
| ID1 | 52 | Roof Wire and Instrument Panel Wire (Near the Driver Side J/B) |
| II3 | 53 | Engine Wire and Instrument Panel Wire (Right Kick Panel) |
| BE1 | 54 | Floor No.1 Wire and Floor No.1 Wire (Left Rear Quarter Panel) |
| BF1 | | |
| BG1 | 55 | Back Door No.1 Wire and Floor No.1 Wire (Left Rear Quarter Panel) |
| BG3 | | |
| BH1 | 55 | Floor No.1 Wire and Floor No.1 Wire (Left Rear Quarter Panel) |

**▽ : Ground Points**

| Code | See Page | Ground Points Location |
|---|---|---|
| EA | 50 | Front Side of the Right Fender Apron |
| IE | 52 | Left Kick Panel |
| IG | 52 | Right Kick Panel |
| BM | 54 | Left Rear Quarter Panel |
| BN | 54 | Left Side of the Back Door |