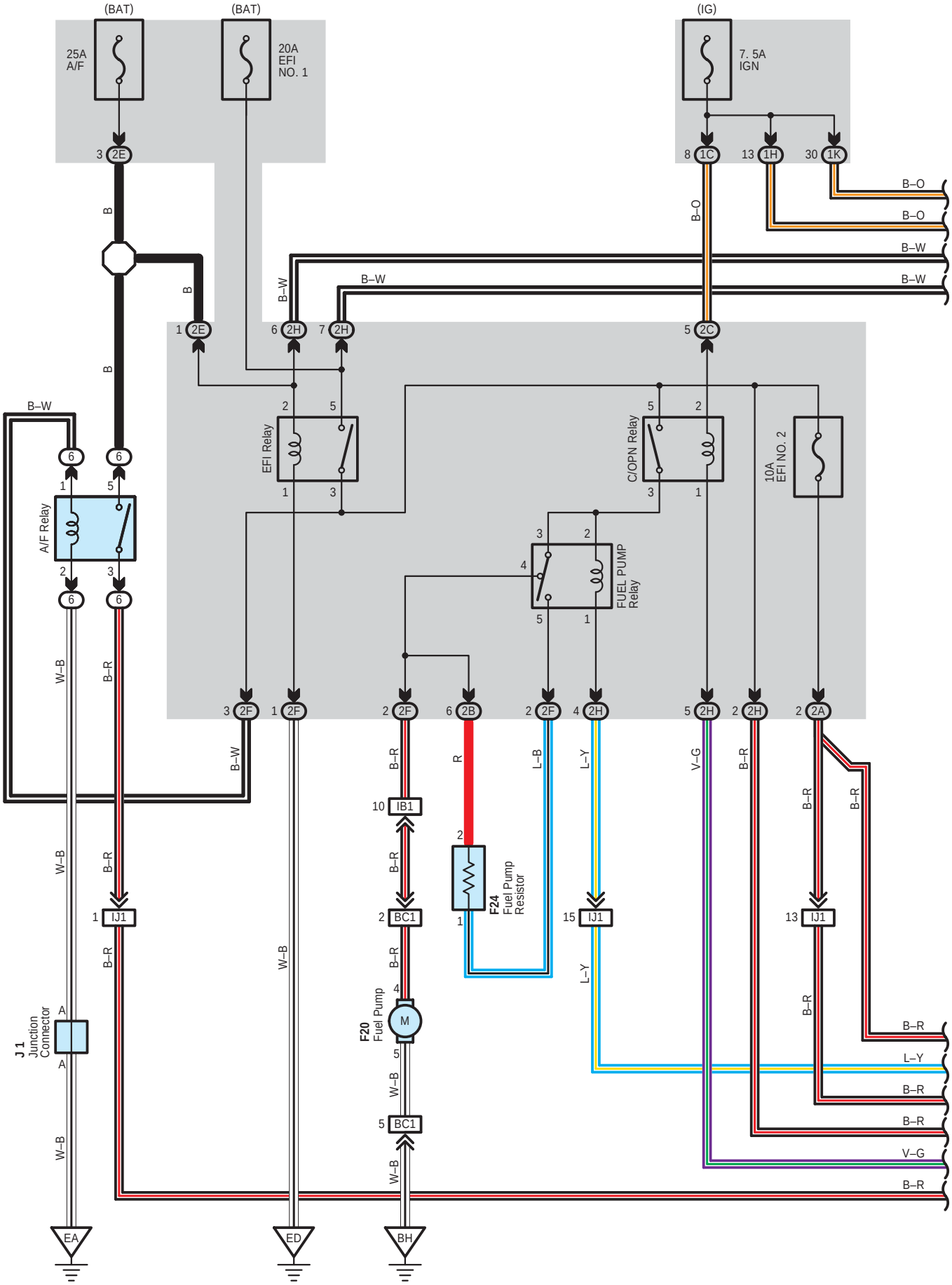
(BAT)
(BAT)
(IG)
25A A/F
20A EFI NO. 1
7. 5A IGN
3 2E
8 1C
13 1H
30 1K
B
B–O
B–W
1 2E
6 2H
7 2H
5 2C
EFI Relay
C/OPN Relay
10A EFI NO. 2
A/F Relay
FUEL PUMP Relay
3 2F
1 2F
2 2F
6 2B
2 2F
4 2H
5 2H
2 2H
2 2A
B–R
R
L–B
L–Y
V–G
10 IB1
2 BC1
1 IJ1
15 IJ1
13 IJ1
F24 Fuel Pump Resistor
F20 Fuel Pump
M
J1 Junction Connector
W–B
EA
ED
BH

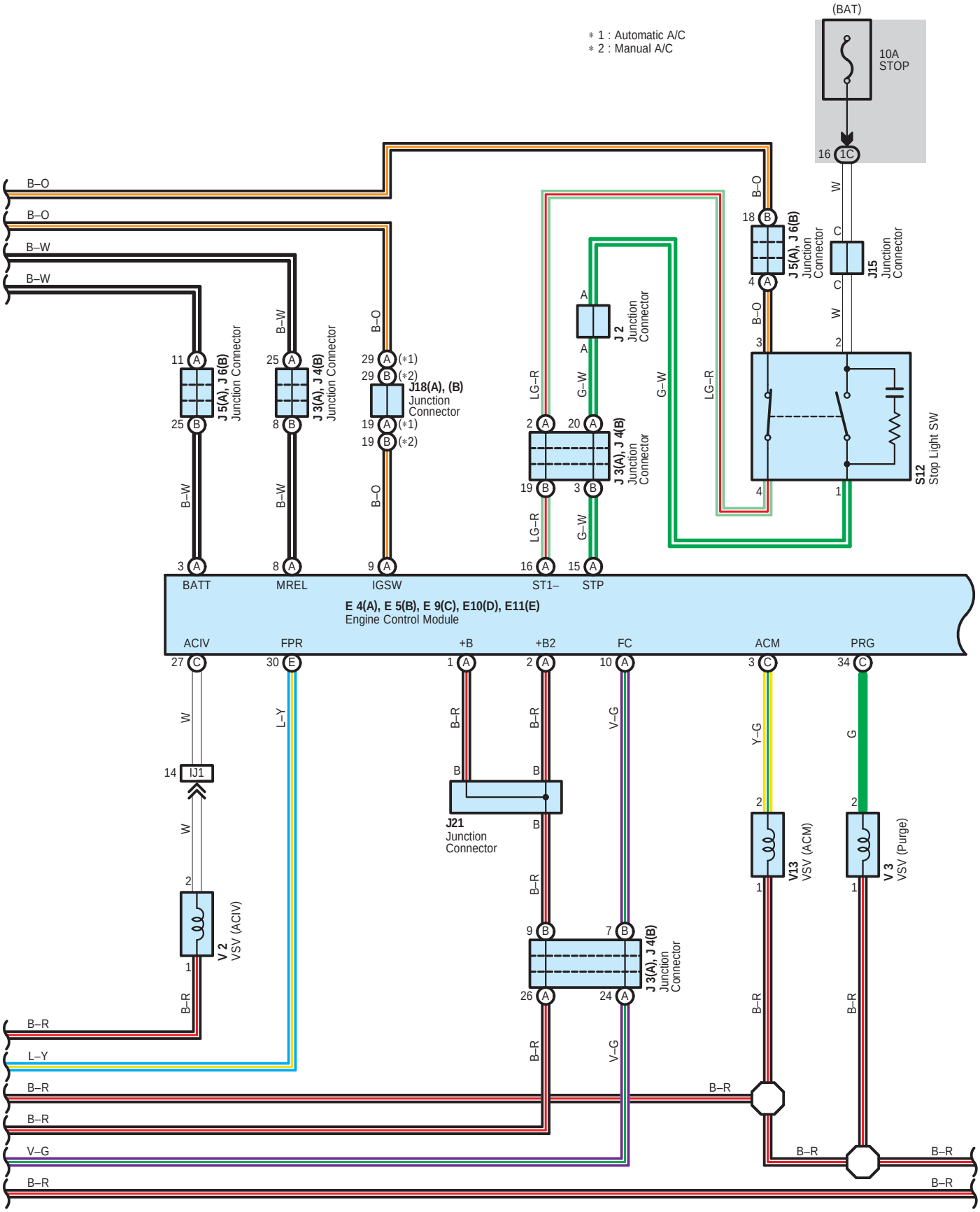
＊1 : Automatic A/C
＊2 : Manual A/C
(BAT)
10A
STOP
16 1C
B–O
B–O
B–W
B–W
18 B
J 5(A), J 6(B)
Junction Connector
4 A
J15
Junction Connector
C
W
B–O
3
2
S12
Stop Light SW
4
1
A
J 2
Junction Connector
A
G–W
LG–R
G–W
LG–R
11 A
25 B
J 5(A), J 6(B)
Junction Connector
B–W
B–W
25 A
8 B
J 3(A), J 4(B)
Junction Connector
B–W
B–W
29 A (*1)
29 B (*2)
J18(A), (B)
Junction Connector
19 A (*1)
19 B (*2)
B–O
B–O
2 A
20 A
J 3(A), J 4(B)
Junction Connector
19 B
3 B
LG–R
G–W
3 A
8 A
9 A
16 A
15 A
BATT
MREL
IGSW
ST1–
STP
E 4(A), E 5(B), E 9(C), E10(D), E11(E)
Engine Control Module
ACIV
FPR
+B
+B2
FC
ACM
PRG
27 C
30 E
1 A
2 A
10 A
3 C
34 C
W
L–Y
B–R
B–R
V–G
Y–G
G
14 IJ1
W
2
V 2
VSV (ACIV)
1
B–R
B
B
J21
Junction Connector
B
B–R
B–R
9 B
7 B
J 3(A), J 4(B)
Junction Connector
26 A
24 A
B–R
V–G
2
V13
VSV (ACM)
1
B–R
2
V 3
VSV (Purge)
1
B–R
B–R
L–Y
B–R
B–R
V–G
B–R
B–R
B–R
B–R
B–R
B–R

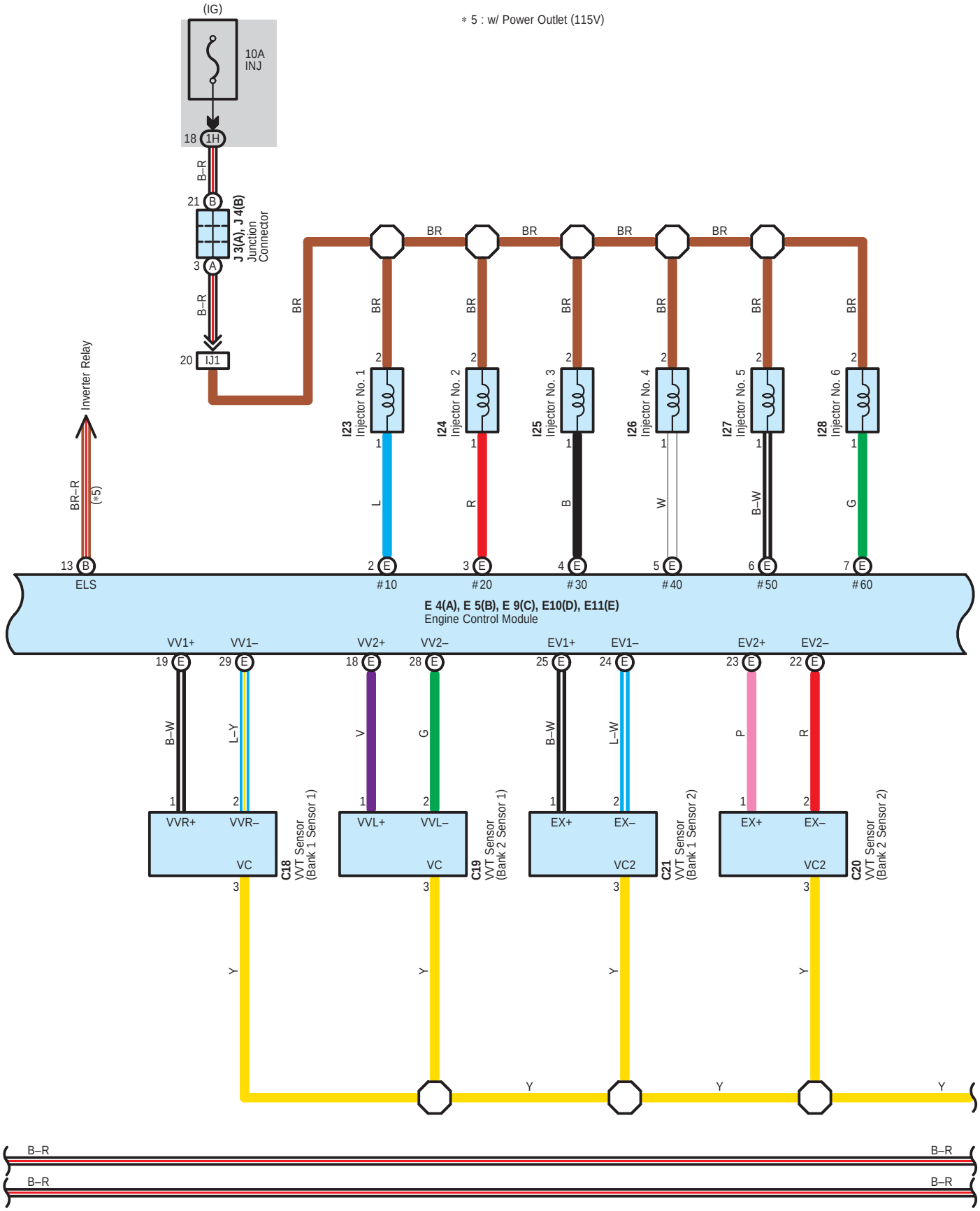
(IG)
10A
INJ
18 1H
B–R
21 B
J 3(A), J 4(B)
Junction
Connector
3 A
B–R
20 IJ1
BR
∗ 5 : w/ Power Outlet (115V)
Inverter Relay
BR–R
(∗5)
13 B
ELS
I23 Injector No. 1
I24 Injector No. 2
I25 Injector No. 3
I26 Injector No. 4
I27 Injector No. 5
I28 Injector No. 6
L
R
B
W
B–W
G
2 E #10
3 E #20
4 E #30
5 E #40
6 E #50
7 E #60
E 4(A), E 5(B), E 9(C), E10(D), E11(E)
Engine Control Module
VV1+
VV1–
VV2+
VV2–
EV1+
EV1–
EV2+
EV2–
19 E
29 E
18 E
28 E
25 E
24 E
23 E
22 E
B–W
L–Y
V
G
B–W
L–W
P
R
VVR+
VVR–
VC
C18 VVT Sensor (Bank 1 Sensor 1)
VVL+
VVL–
VC
C19 VVT Sensor (Bank 2 Sensor 1)
EX+
EX–
VC2
C21 VVT Sensor (Bank 1 Sensor 2)
EX+
EX–
VC2
C20 VVT Sensor (Bank 2 Sensor 2)
Y
B–R

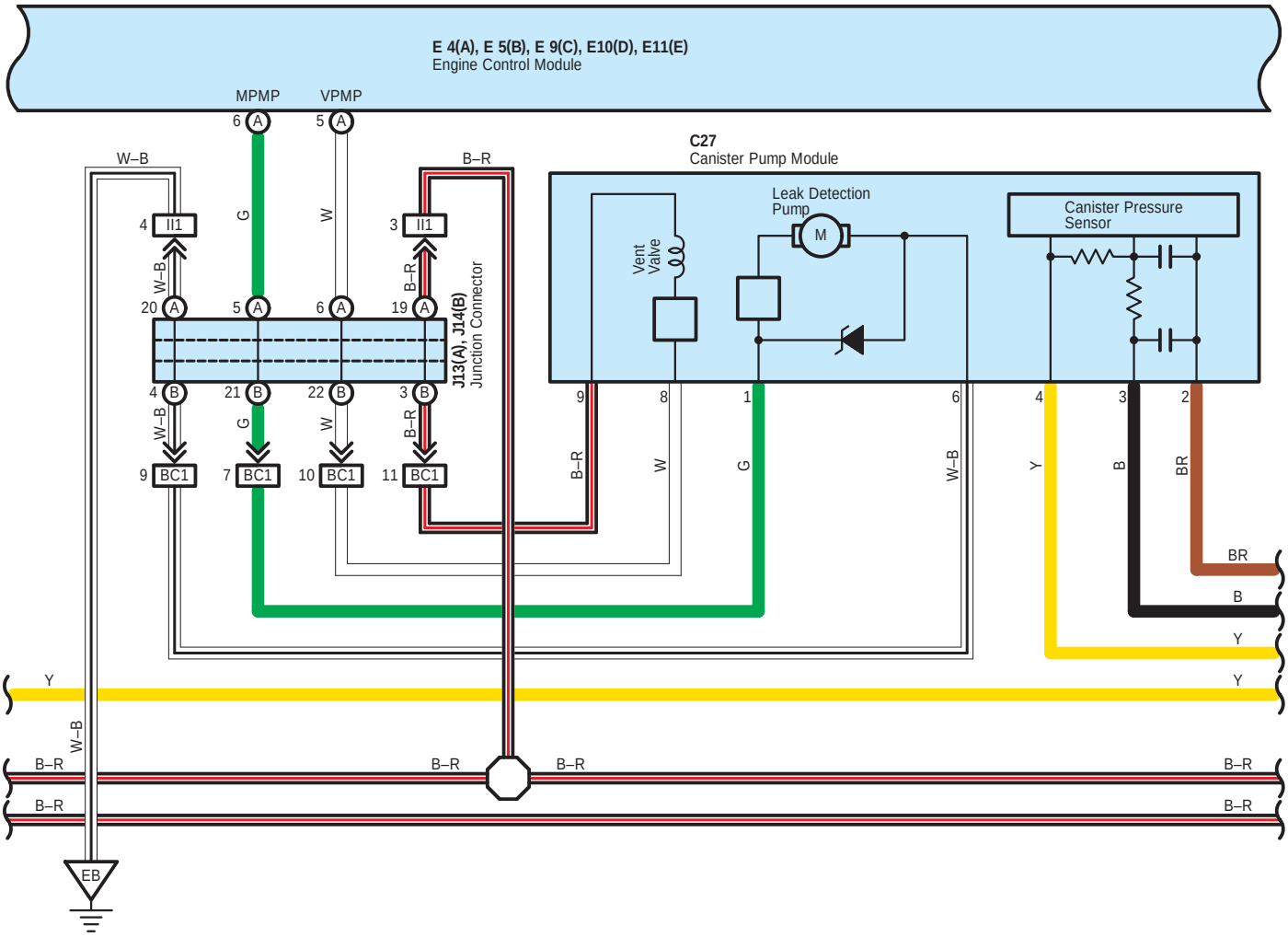
E 4(A), E 5(B), E 9(C), E10(D), E11(E)
Engine Control Module
MPMP
VPMP
C27
Canister Pump Module
Leak Detection Pump
Canister Pressure Sensor
Vent Valve
M
J13(A), J14(B)
Junction Connector
II1
BC1
W–B
B–R
G
W
Y
B
BR
EB

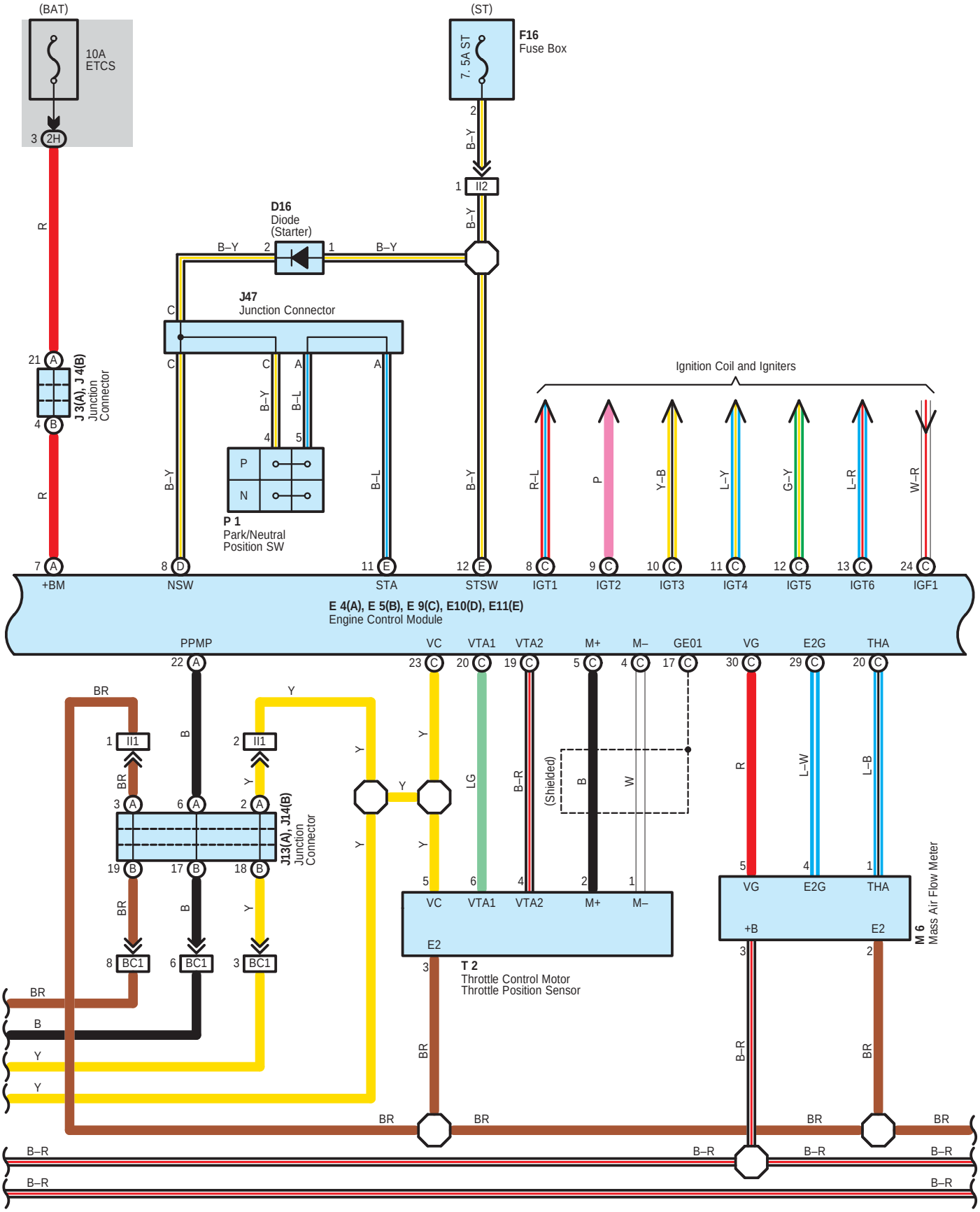
(BAT)
10A
ETCS
3 2H
R
21 A
J 3(A), J 4(B)
Junction
Connector
4 B
R
7 A
+BM
(ST)
F16
Fuse Box
7. 5A ST
2
B–Y
1 II2
B–Y
D16
Diode
(Starter)
B–Y 2 1 B–Y
J47
Junction Connector
C
C C A A
B–Y B–L
4 5
P
N
P 1
Park/Neutral
Position SW
B–Y
B–L
B–Y
8 D
NSW
11 E
STA
12 E
STSW
Ignition Coil and Igniters
R–L P Y–B L–Y G–Y L–R W–R
8 C 9 C 10 C 11 C 12 C 13 C 24 C
IGT1 IGT2 IGT3 IGT4 IGT5 IGT6 IGF1
E 4(A), E 5(B), E 9(C), E10(D), E11(E)
Engine Control Module
PPMP
22 A
VC VTA1 VTA2 M+ M– GE01 VG E2G THA
23 C 20 C 19 C 5 C 4 C 17 C 30 C 29 C 20 C
BR
1 II1
2 II1
BR
Y
3 A 6 A 2 A
J13(A), J14(B)
Junction
Connector
19 B 17 B 18 B
BR B Y
8 BC1 6 BC1 3 BC1
Y
Y
Y
Y
Y
LG
B–R
(Shielded)
B
W
R
L–W
L–B
5 6 4 2 1
VC VTA1 VTA2 M+ M–
E2
3
T 2
Throttle Control Motor
Throttle Position Sensor
5 4 1
VG E2G THA
+B E2
3 2
M 6
Mass Air Flow Meter
BR
B
Y
Y
BR
B–R
BR
BR BR BR BR
B–R B–R B–R B–R
B–R B–R

∗ 1 : Automatic A/C
∗ 2 : Manual A/C

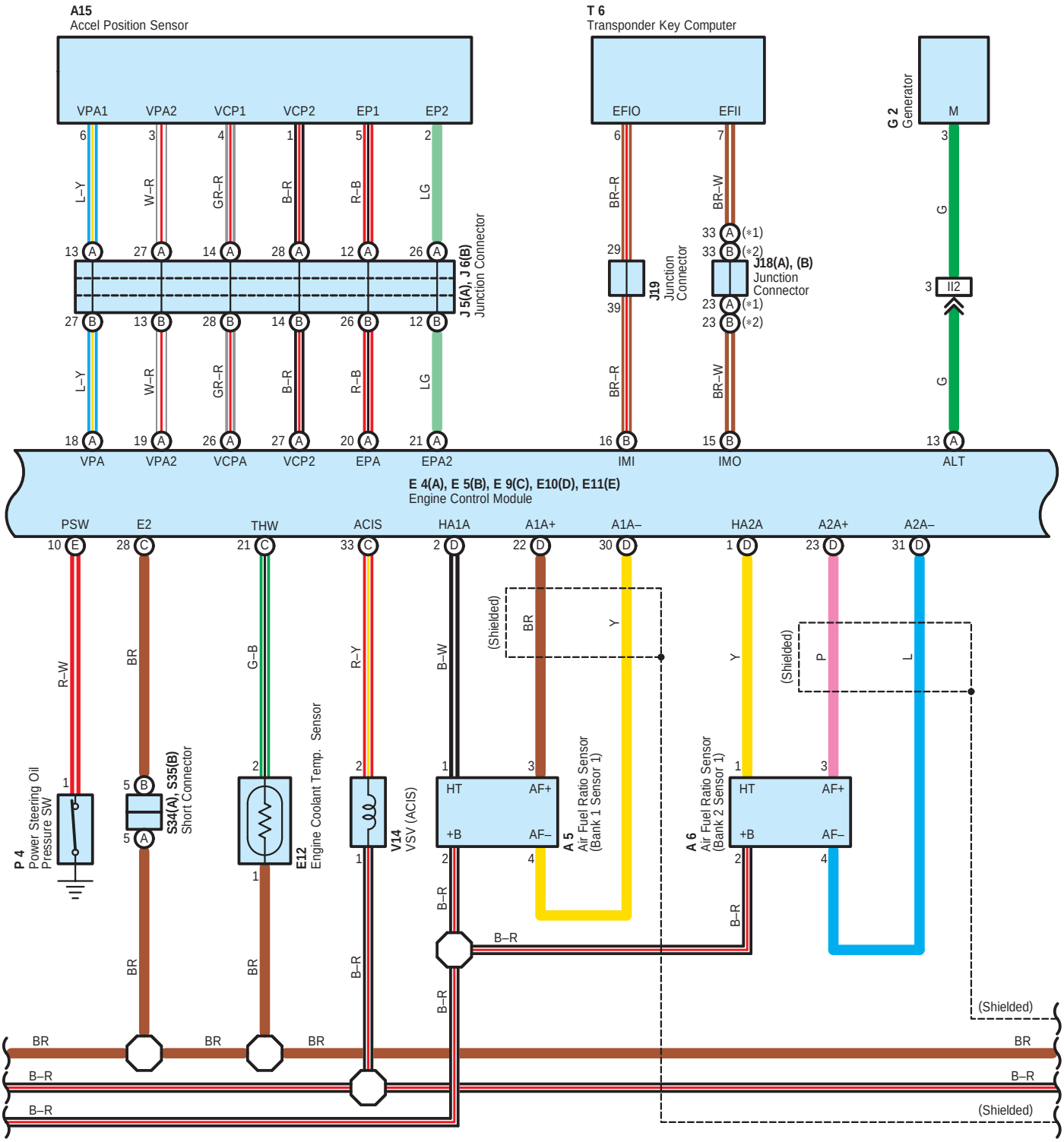

* 1 : Automatic A/C
* 2 : Manual A/C
* 3 : w/ VSC
* 4 : w/o VSC

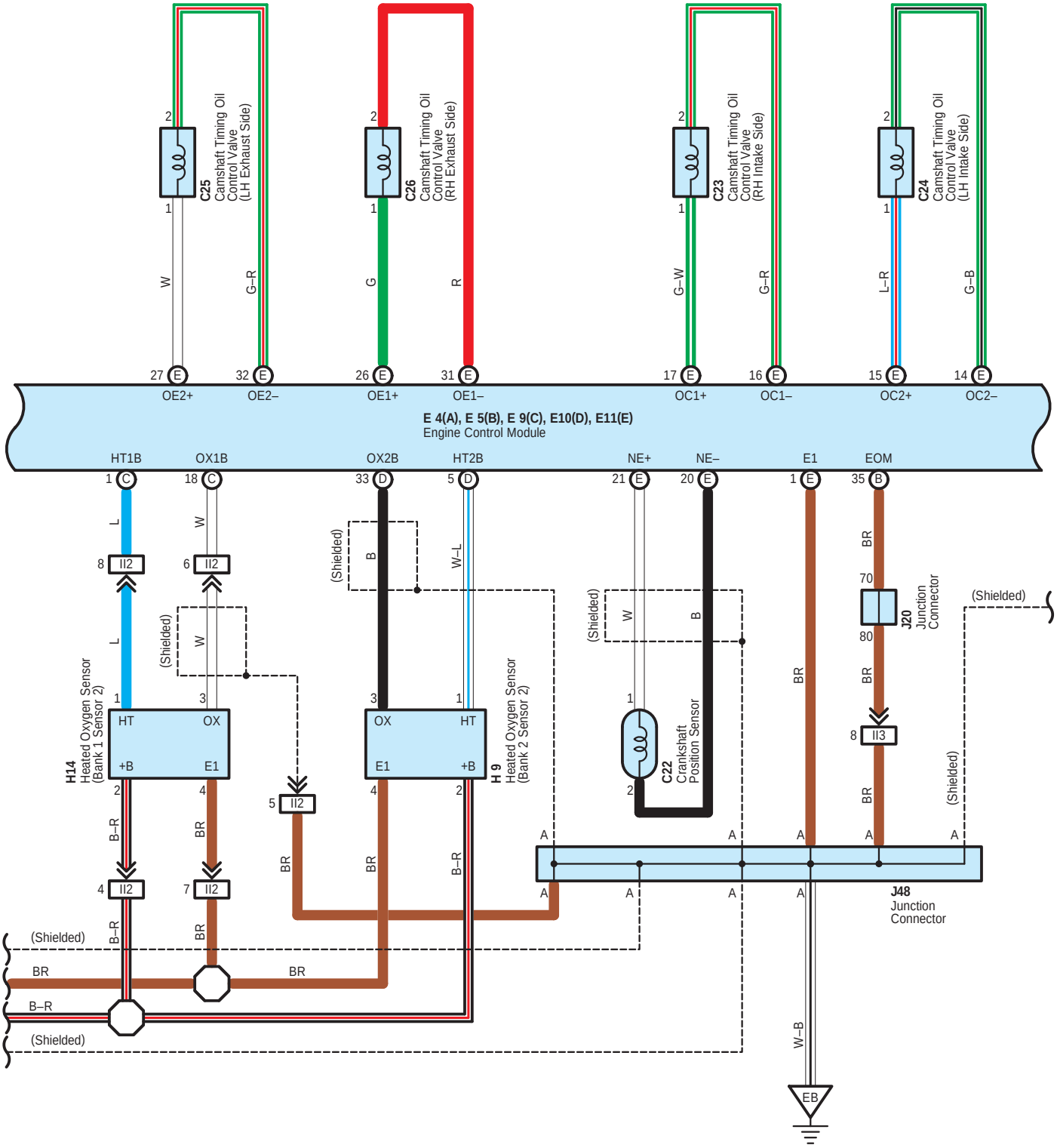

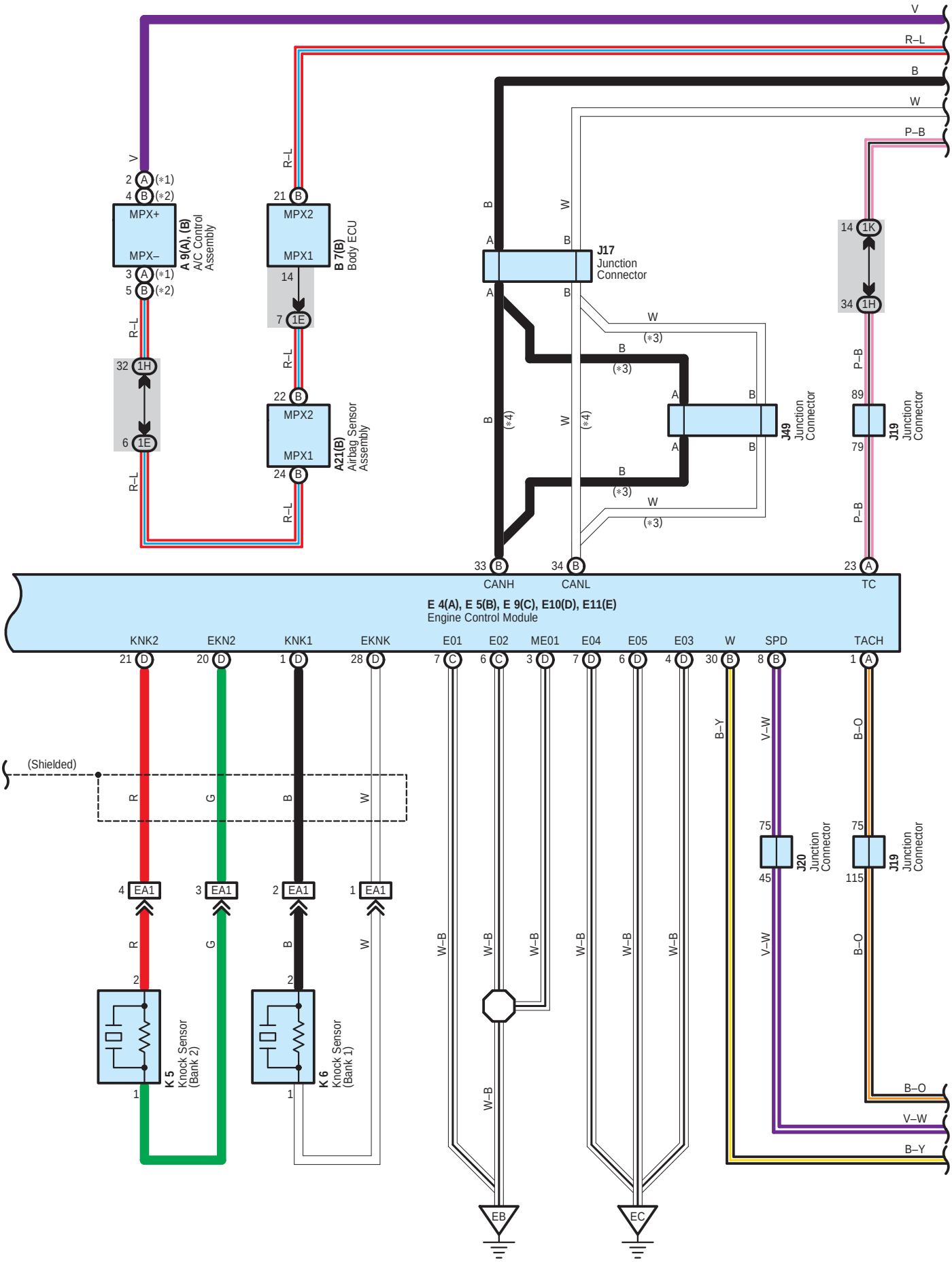
V
R–L
B
W
P–B
2 A (*1)
4 B (*2)
MPX+
MPX–
A 9(A), (B)
A/C Control Assembly
3 A (*1)
5 B (*2)
R–L
32 1H
6 1E
21 B
MPX2
MPX1
B 7(B)
Body ECU
14
7 1E
22 B
MPX2
MPX1
A21(B)
Airbag Sensor Assembly
24 B
J17
Junction Connector
W (*3)
B (*3)
J49
Junction Connector
14 1K
34 1H
89
79
J19
Junction Connector
33 B
34 B
23 A
CANH
CANL
TC
E 4(A), E 5(B), E 9(C), E10(D), E11(E)
Engine Control Module
KNK2
EKN2
KNK1
EKNK
E01
E02
ME01
E04
E05
E03
W
SPD
TACH
21 D
20 D
1 D
28 D
7 C
6 C
3 D
7 D
6 D
4 D
30 B
8 B
1 A
(Shielded)
4 EA1
3 EA1
2 EA1
1 EA1
K 5
Knock Sensor (Bank 2)
K 6
Knock Sensor (Bank 1)
W–B
B–Y
V–W
B–O
75
45
115
J20
Junction Connector
EB
EC

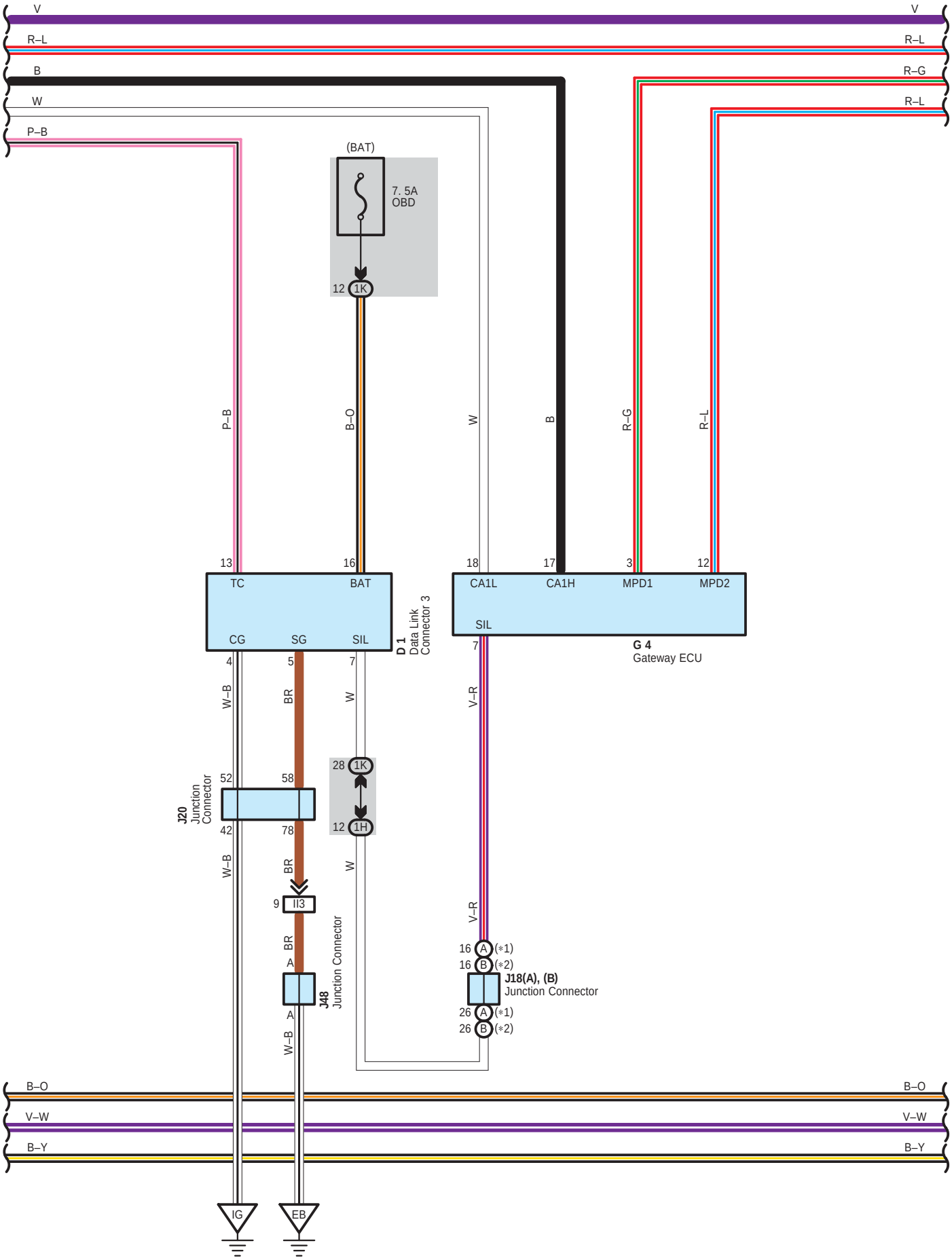
V
R–L
B
W
P–B
(BAT)
7. 5A
OBD
12
1K
P–B
B–O
W
B
R–G
R–L
13
16
18
17
3
12
TC
BAT
CA1L
CA1H
MPD1
MPD2
SIL
CG
SG
SIL
D 1
Data Link
Connector 3
G 4
Gateway ECU
4
5
7
7
W–B
BR
W
V–R
28
1K
J20
Junction
Connector
52
58
42
78
12
1H
W–B
BR
W
V–R
9
II3
BR
A
J48
Junction Connector
A
W–B
16
A
(*1)
16
B
(*2)
J18(A), (B)
Junction Connector
26
A
(*1)
26
B
(*2)
B–O
V–W
B–Y
IG
EB

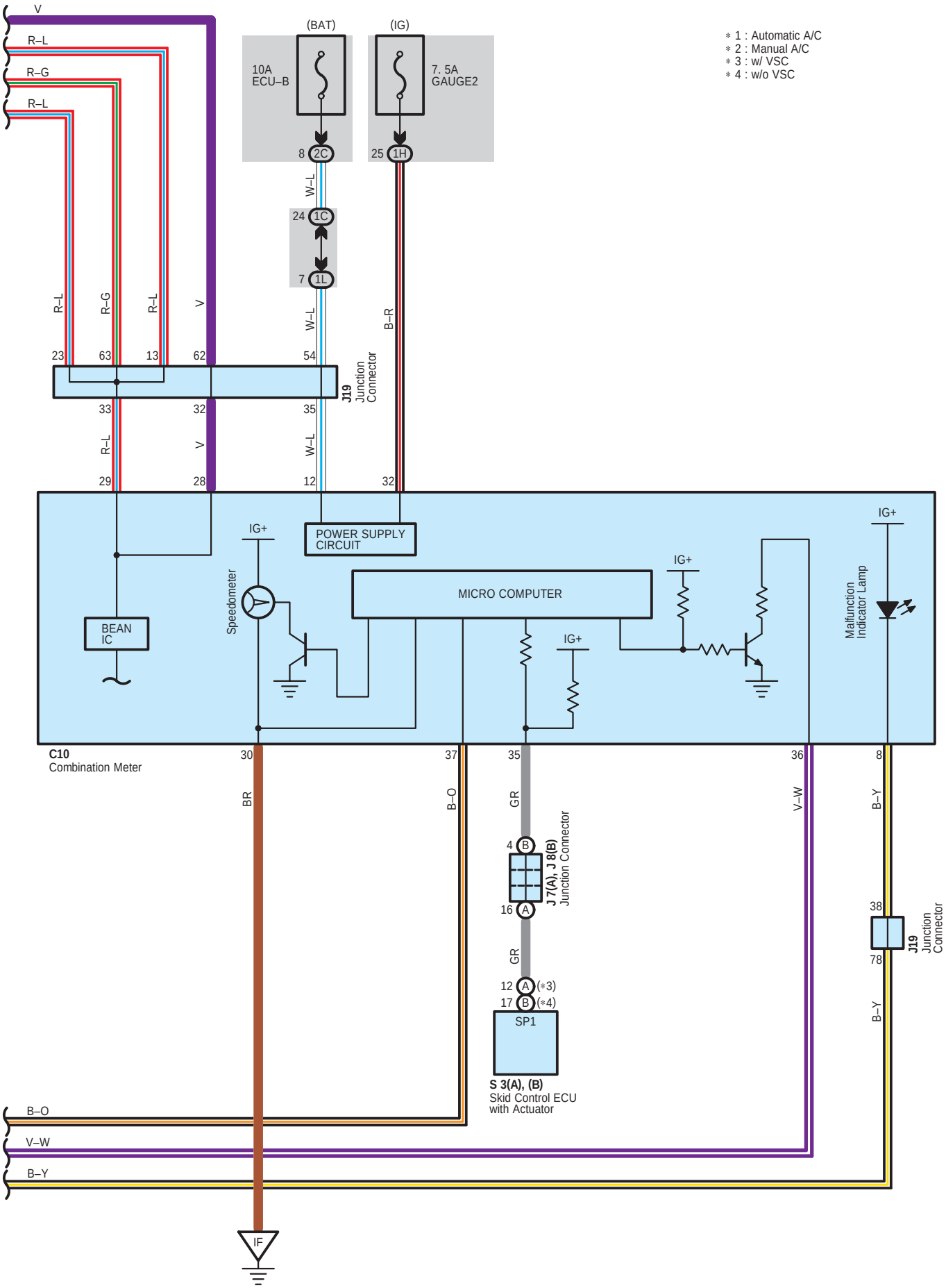
∗ 1 : Automatic A/C
∗ 2 : Manual A/C
∗ 3 : w/ VSC
∗ 4 : w/o VSC
(BAT)
(IG)
10A
ECU–B
7. 5A
GAUGE2
J19
Junction
Connector
POWER SUPPLY
CIRCUIT
MICRO COMPUTER
BEAN
IC
Speedometer
IG+
Malfunction
Indicator Lamp
C10
Combination Meter
J 7(A), J 8(B)
Junction Connector
SP1
S 3(A), (B)
Skid Control ECU
with Actuator
IF

System Outline

The engine control system utilizes a microcomputer and maintains overall control of the engine, transaxle etc. An outline of the engine control is given here.

1. Input Signals

(1) Water temp. signal circuit

The water temp. sensor detects the engine coolant temp. and has a built–in thermistor with a resistance which varies according to the engine coolant temp. The engine coolant temp. is input into TERMINAL THW of the engine control module as a control signal.

(2) Intake air temp. signal circuit

The intake air temp. sensor is installed in the mass air flow meter and detects the intake air temp., which is input as a control signal to TERMINAL THA of the engine control module.

(3) Oxygen sensor signal circuit

The oxygen density in the exhaust emission is detected and is input as a control signal from the heated oxygen sensors to TERMINALS OX1B and OX2B of the engine control module.

(4) RPM signal circuit

Camshaft position is detected by the VVT sensor (Bank 1 exhaust side, bank 1 intake side, bank 2 exhaust side and back 2 intake side), and their signals are input to TERMINALS EV1+, EV2+, VV1+ and VV2+ of the engine control module as control signals. Also, the engine RPM is detected by the crankshaft position sensor installed in the cylinder block and the signal is input into TERMINAL NE+ of the engine control module as a control signal.

(5) Throttle position sensor signal circuit

The throttle position sensor detects the throttle valve opening angle as a control signal, which is input into TERMINALS VTA1 and VTA2 of the engine control module.

(6) Vehicle speed circuit

The vehicle speed sensor detects the vehicle speed, and the signal is input into TERMINAL SPD of the engine control module via the combination meter, from TERMINAL SP1 of the skid control ECU with actuator.

(7) Battery signal circuit

Voltage is constantly applied to TERMINAL BATT of the engine control module. When the power SW is pushed on, the voltage for engine control module start–up power supply is applied to TERMINAL +B and +B2 of engine control module via EFI relay.

(8) Intake air volume signal circuit

The intake air volume is detected by the mass air flow meter, and is input as a control signal to TERMINAL VG of the engine control module.

(9) Stop lamp SW signal circuit

The stop lamp SW is used to detect whether the vehicle is braking or not, and the signal is input into TERMINAL STP of the engine control module as a control signal.

(10) Starter signal circuit

To confirm whether the engine is cranking, the voltage applied to the starter motor when the engine is cranking is detected, and is input into TERMINAL STA of the engine control module as a control signal.

(11) Engine knock signal circuit

Engine knocking is detected by the knock control sensors, and is input into TERMINALS KNK1 and KNK2 of the engine control module as a control signal.

(12) Air fuel ratio signal circuit

The air fuel ratio is detected and input as a control signal into TERMINALS A1A+, A2A+ of the engine control module.

2. Control System

* SFI system
  The SFI system monitors the engine condition through the signals input from each sensors to the engine control module. The control signal is sent to the engine control module TERMINALS #10, #20, #30, #40, #50 and #60 to operate the injector (Fuel injection). The SFI system controls the fuel injection by the engine control module in response to the driving conditions.
* ESA system
  The ESA system monitors the engine condition through the signals input from each sensors to the engine control module. The best ignition timing is decided according to this data and the data memorized in the engine control module. The control signal is output to TERMINALS IGT1, IGT2, IGT3, IGT4, IGT5 and IGT6, and these signals control the igniter to provide the best ignition timing.
* Heated oxygen sensor heater control system
  The heated oxygen sensor heater control system turns the heater on when the intake air volume is low (Temp. of exhaust emission is low), and warms up the heated oxygen sensors to improve their detection performance. The engine control module evaluates the signals from each sensors, and outputs current to TERMINALS HT1B or HT2B to control the heater.
* Air fuel ratio sensor heater control system
  The air fuel ratio sensor heater control system turns the heater on when the intake air volume is low (Temp. of exhaust emission is low), and warms up the air fuel ratio sensor to improve detection performance of the sensor.
  The engine control module evaluates the signals from each sensor, current is output to TERMINALS HA1A and HA2A, controlling the heater.
* ACIS
  The ACIS includes a valve in the bulkhead separating the surge tank into two parts. This valve is opened and closed in accordance with the driving conditions to control the intake manifold length in two stages, for increased engine output in all ranges from low to high speeds.
* ETCS–i
  The ETCS–i controls the engine output at its optimal level in accordance with the opening of the accelerator pedal, under all driving conditions.
* Dual VVT–i
  Dual VVT–i controls the intake and exhaust valve timing to the most appropriate levels in accordance with the engine conditions.

3. Diagnosis System

When there is a malfunction in the engine control module signal system, the malfunctioning system is recorded in the memory. The malfunctioning system can be found by reading the code displayed on the check engine indicator lamp.

4. Fail–Safe System

When a malfunction has occurred in any system, there is a possibility of causing engine trouble due to continued control based on that system. In that case, the fail–safe system either controls the system using the data (Standard values) recorded in the engine control module memory, or else stops the engine.

: Parts Location

Code	See Page	Code	See Page	Code	See Page
A5	36	E12	36	J17	40
A6	36	F16	39	J18 A	40
A9 A	38	F20	42	J18 B	40
A9 B	38	F24	36	J19	40
A15	38	G2	36	J20	40
A21 B	38	G4	39	J21	40
B7 B	38	H9	36	J48	40
C10	39	H14	39	J49	40
C18	36	I23	37	K5	37
C19	36	I24	37	K6	37
C20	36	I25	37	M6	37
C21	36	I26	37	P1	37
C22	36	I27	37	P4	37
C23	36	I28	37	S3 A	37
C24	36	J1	37	S3 B	37
C25	36	J2	37	S12	41
C26	36	J3 A	40	S34 A	41
C27	42	J4 B	40	S35 B	41
D1	39	J5 A	40	T2	37
D16	39	J6 B	40	T6	41
E4 A	39	J7 A	40	V2	37
E5 B	39	J8 B	40	V3	37
E9 C	39	J13 A	40	V13	37
E10 D	39	J14 B	40	V14	37
E11 E	39	J15	40		

: Relay Blocks

Code	See Page	Relay Blocks (Relay Block Location)
6	28	R/B No.6 (Engine Compartment Left)

: Junction Block and Wire Harness Connector

Code	See Page	Junction Block and Wire Harness (Connector Location)
1C	31	Engine Room Main Wire and Driver Side J/B (Lower Finish Panel)
1E	31	Instrument Panel Wire and Driver Side J/B (Lower Finish Panel)
1H	30	
1K	31	
1L		
2A	24	Engine Room Main Wire and Engine Room J/B (Engine Compartment Left)
2B		
2C		
2E		
2F		
2H		

: Connector Joining Wire Harness and Wire Harness

Code	See Page	Joining Wire Harness and Wire Harness (Connector Location)
EA1	50	Engine Wire and Sensor Wire (Near the Cylinder Head of the Left Bank)
IB1	52	Engine Room Main Wire and Floor No.1 Wire (Left Cowl Side Panel)
II1	53	Engine Wire and Instrument Panel Wire (Right Kick Panel)
II2		
II3		
IJ1	53	Engine Wire and Engine Room Main Wire (Right Kick Panel)
BC1	54	Fuel Gauge Wire and Floor No.1 Wire (Near the Fuel Tank)

: Ground Points

Code	See Page	Ground Points Location
EA	50	Front Side of the Right Fender Apron
EB	50	Rear Bank of Right Cylinder Head
EC	50	Rear Bank of Left Cylinder Head
ED	50	Front Side of the Left Fender Apron
IF	52	Instrument Panel Brace LH
IG	52	Right Kick Panel
BH	54	Under the Left Center Pillar