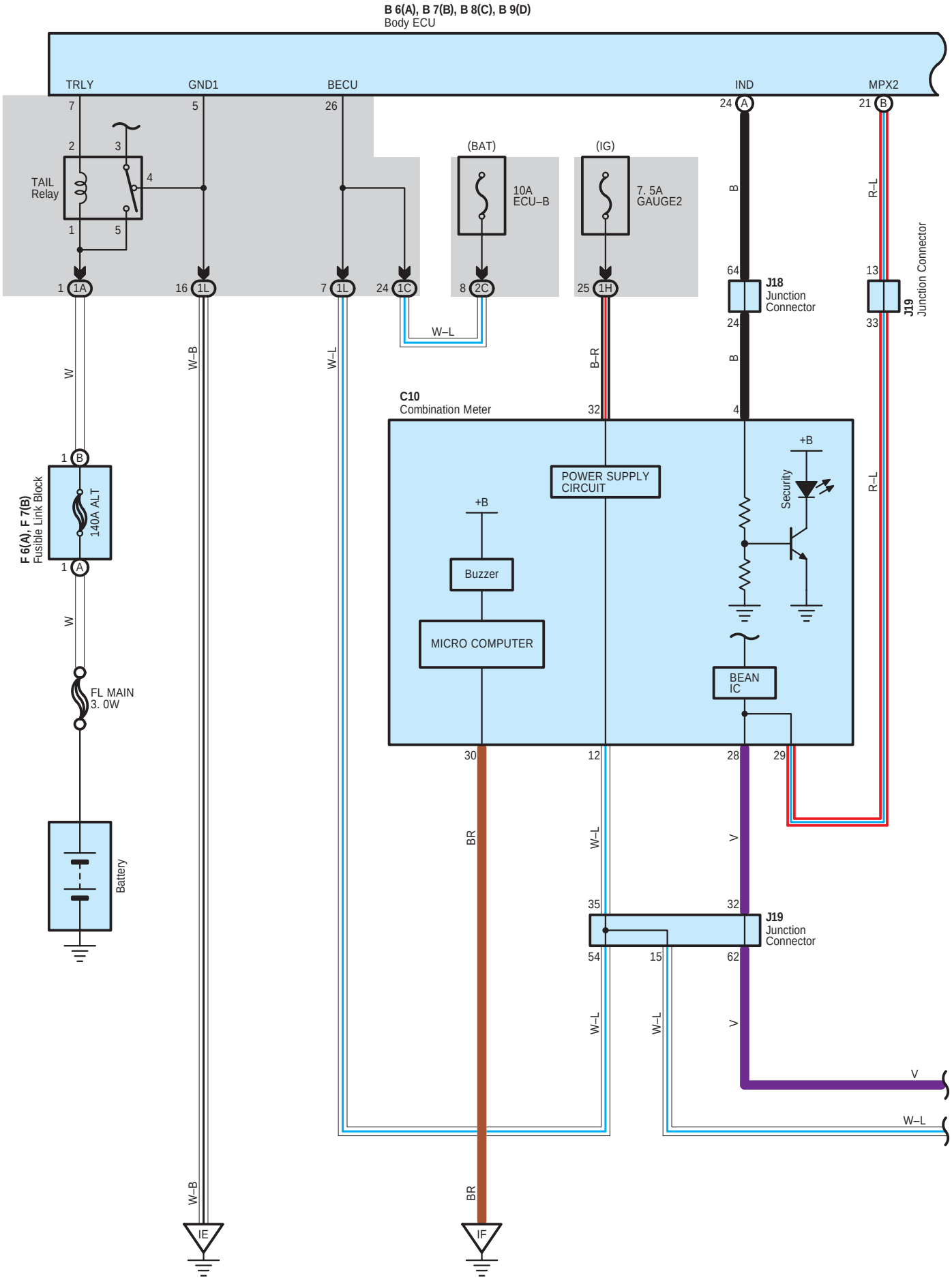
B 6(A), B 7(B), B 8(C), B 9(D)
Body ECU
TRLY
GND1
BECU
IND
MPX2
TAIL Relay
(BAT)
10A ECU–B
(IG)
7. 5A GAUGE2
J18 Junction Connector
J19 Junction Connector
C10
Combination Meter
POWER SUPPLY CIRCUIT
Buzzer
MICRO COMPUTER
Security
BEAN IC
F 6(A), F 7(B)
Fusible Link Block
140A ALT
FL MAIN
3. 0W
Battery
IE
IF
W
W–B
W–L
B–R
B
R–L
BR
V

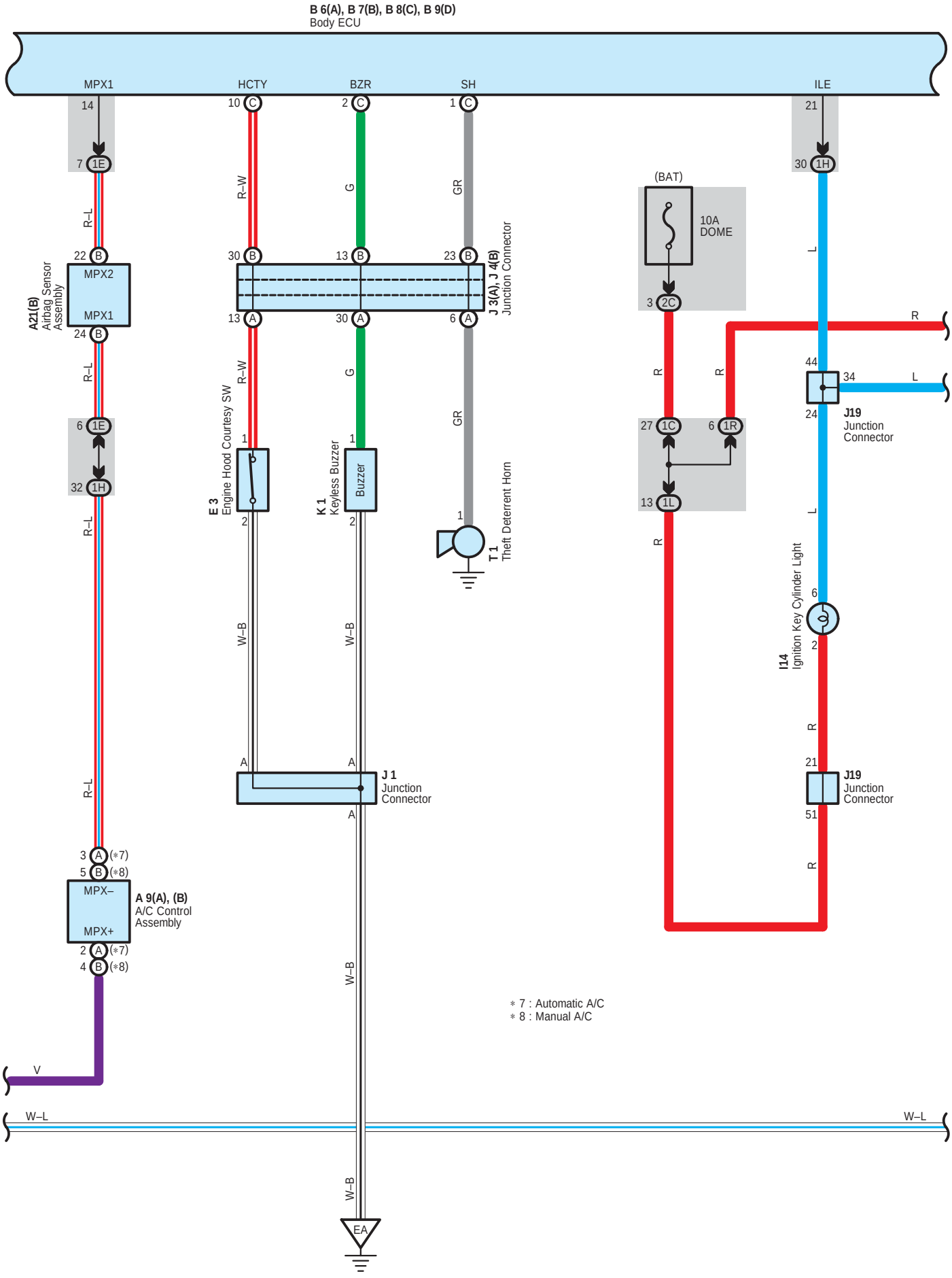
B 6(A), B 7(B), B 8(C), B 9(D)
Body ECU
MPX1
HCTY
BZR
SH
ILE
14
7 1E
10 C
2 C
1 C
21
30 1H
(BAT)
10A
DOME
3 2C
R–L
R–W
G
GR
L
R
22 B
30 B
13 B
23 B
A21(B)
Airbag Sensor
Assembly
MPX2
MPX1
24 B
J 3(A), J 4(B)
Junction Connector
13 A
30 A
6 A
6 1E
32 1H
E 3
Engine Hood Courtesy SW
1
2
K 1
Keyless Buzzer
Buzzer
T 1
Theft Deterrent Horn
W–B
A
J 1
Junction
Connector
27 1C
6 1R
13 1L
44
34
24
J19
Junction
Connector
I14
Ignition Key Cylinder Light
6
2
21
51
3 A (*7)
5 B (*8)
MPX–
MPX+
A 9(A), (B)
A/C Control
Assembly
2 A (*7)
4 B (*8)
V
W–L
EA
* 7 : Automatic A/C
* 8 : Manual A/C

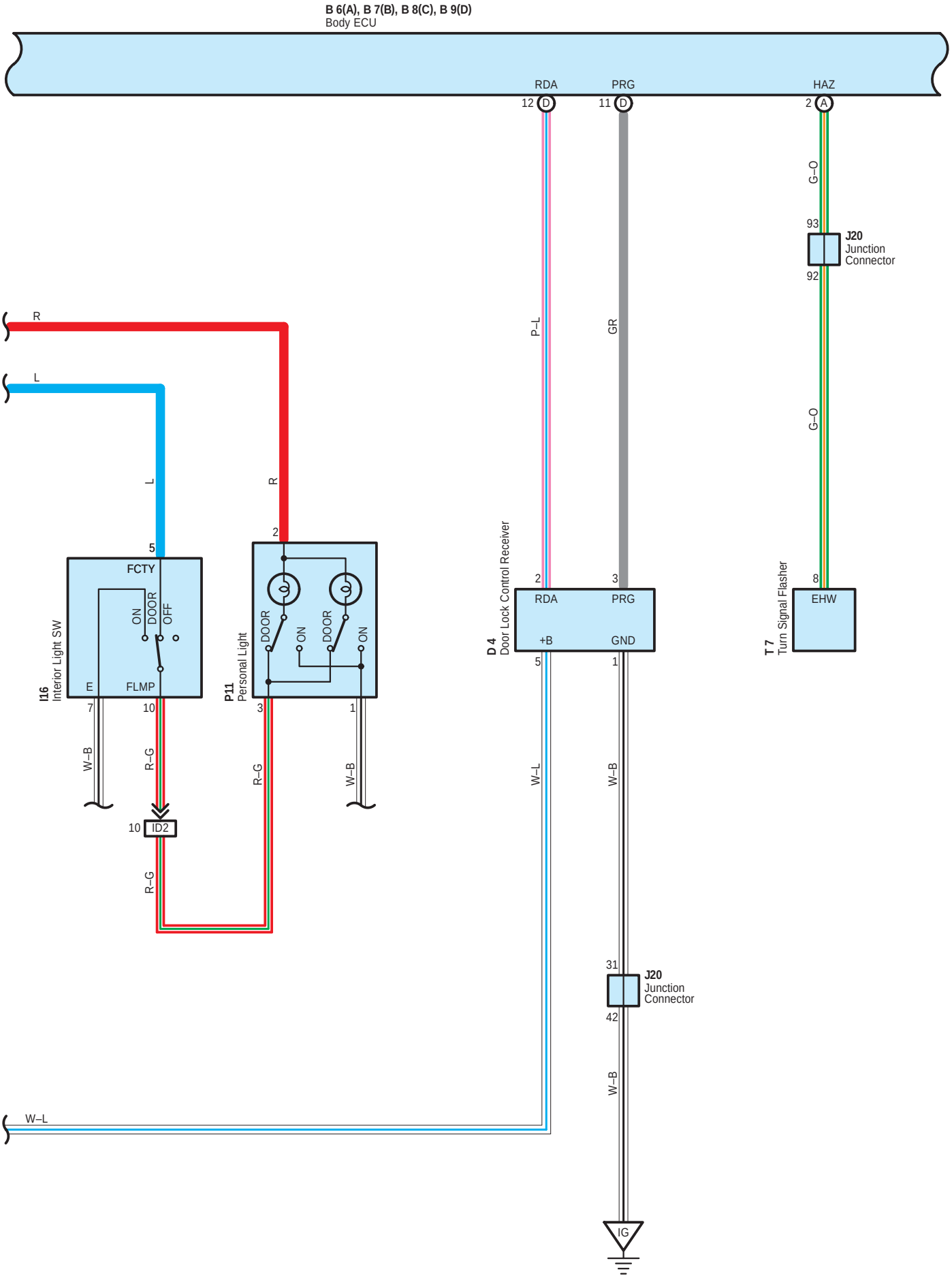
B 6(A), B 7(B), B 8(C), B 9(D)
Body ECU
RDA
PRG
HAZ
12 D
11 D
2 A
G–O
93
J20
Junction
Connector
92
G–O
P–L
GR
R
L
L
R
5
2
FCTY
ON
DOOR
OFF
I16
Interior Light SW
E
FLMP
7
10
W–B
R–G
10 ID2
R–G
P11
Personal Light
DOOR
ON
DOOR
ON
3
1
R–G
W–B
D 4
Door Lock Control Receiver
2
3
RDA
PRG
+B
GND
5
1
W–L
W–B
T 7
Turn Signal Flasher
8
EHW
31
J20
Junction
Connector
42
W–B
IG
W–L

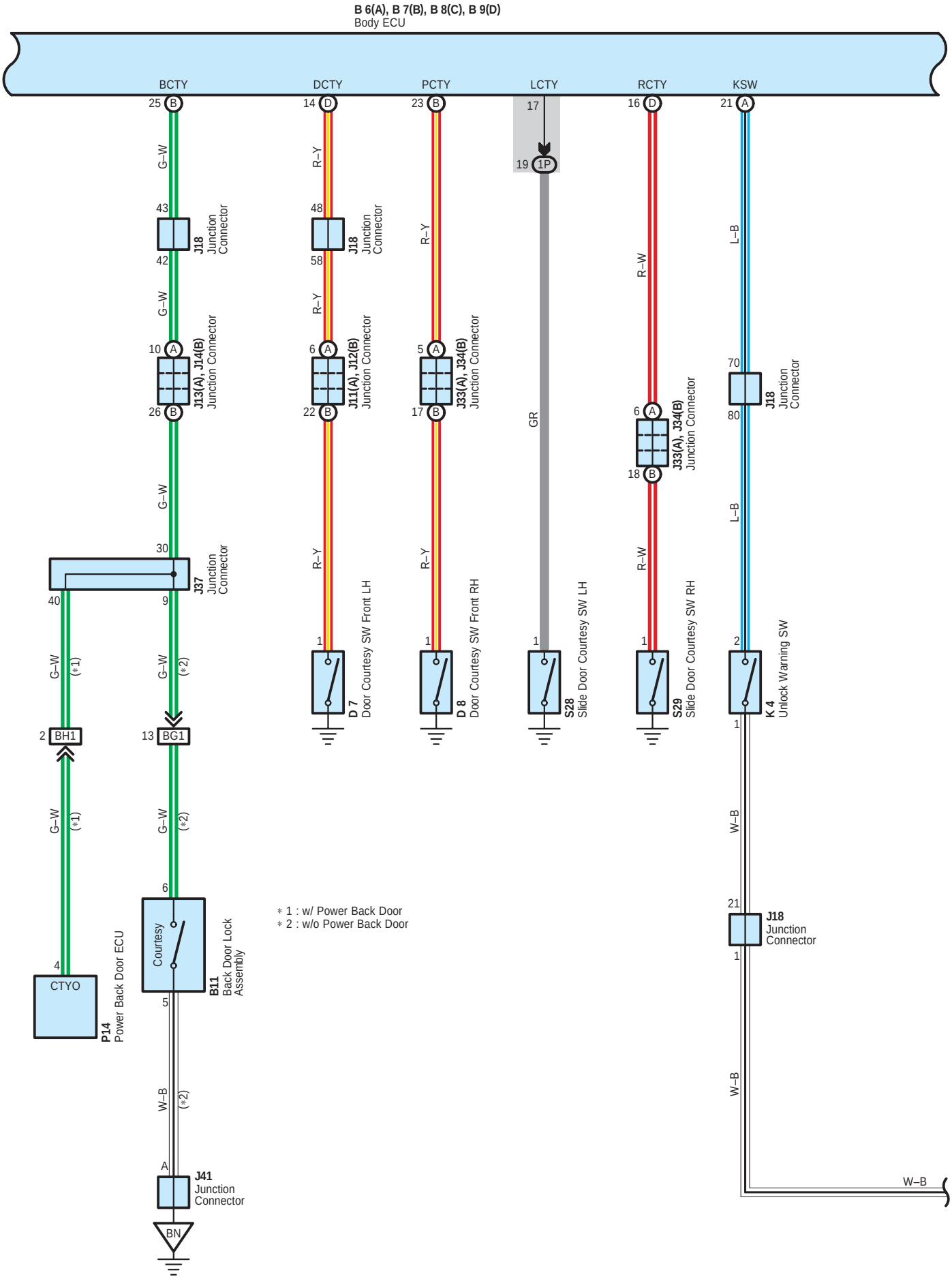
B 6(A), B 7(B), B 8(C), B 9(D)
Body ECU
BCTY
DCTY
PCTY
LCTY
RCTY
KSW
J18 Junction Connector
J13(A), J14(B) Junction Connector
J11(A), J12(B) Junction Connector
J33(A), J34(B) Junction Connector
J37 Junction Connector
D 7 Door Courtesy SW Front LH
D 8 Door Courtesy SW Front RH
S28 Slide Door Courtesy SW LH
S29 Slide Door Courtesy SW RH
K 4 Unlock Warning SW
BH1
BG1
CTYO
P14 Power Back Door ECU
Courtesy
B11 Back Door Lock Assembly
J41 Junction Connector
BN
G–W
R–Y
R–W
L–B
W–B
GR
(*1)
(*2)
* 1 : w/ Power Back Door
* 2 : w/o Power Back Door

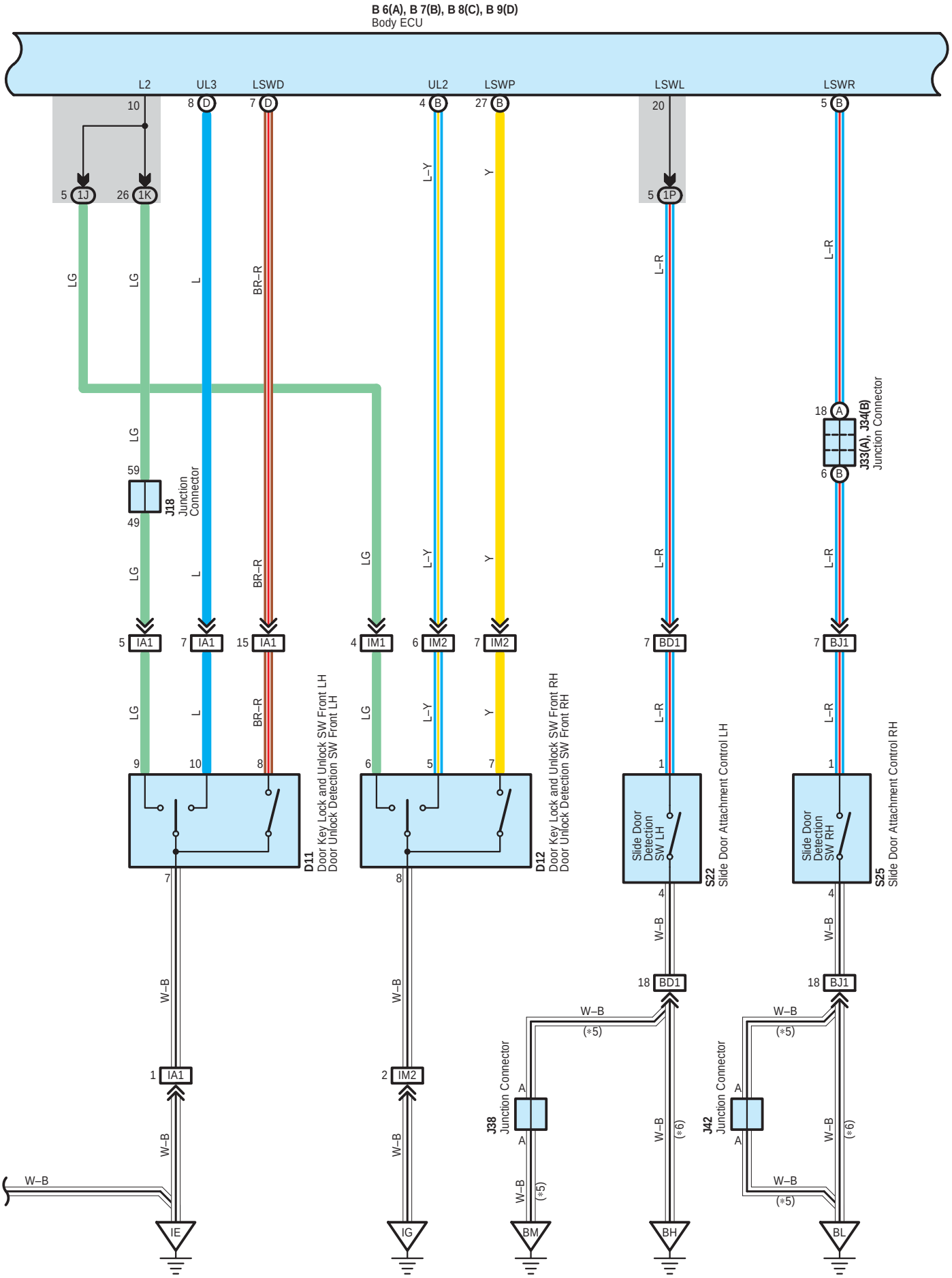
B 6(A), B 7(B), B 8(C), B 9(D)
Body ECU
L2
UL3
LSWD
UL2
LSWP
LSWL
LSWR
10
8 D
7 D
4 B
27 B
20
5 B
5 1J
26 1K
5 1P
LG
LG
L
BR–R
L–Y
Y
L–R
18 A
6 B
J33(A), J34(B)
Junction Connector
59
49
J18
Junction
Connector
5 IA1
7 IA1
15 IA1
4 IM1
6 IM2
7 IM2
7 BD1
7 BJ1
9
10
8
6
5
7
1
1
D11
Door Key Lock and Unlock SW Front LH
Door Unlock Detection SW Front LH
D12
Door Key Lock and Unlock SW Front RH
Door Unlock Detection SW Front RH
Slide Door Detection SW LH
S22
Slide Door Attachment Control LH
Slide Door Detection SW RH
S25
Slide Door Attachment Control RH
4
W–B
18 BD1
18 BJ1
(*5)
(*6)
J38
Junction Connector
J42
Junction Connector
A
1 IA1
2 IM2
W–B
IE
IG
BM
BH
BL

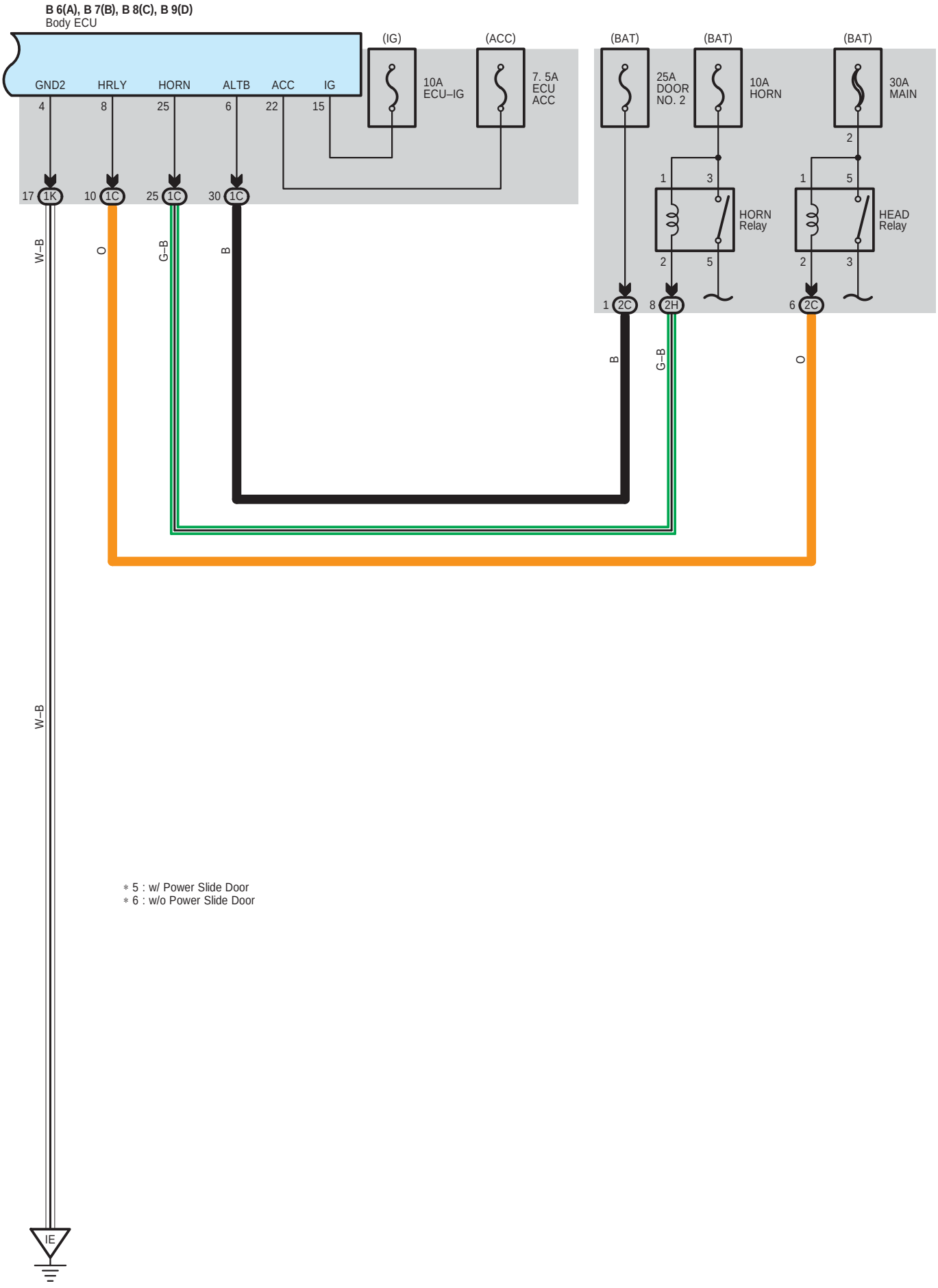
B 6(A), B 7(B), B 8(C), B 9(D)
Body ECU
GND2
HRLY
HORN
ALTB
ACC
IG
4
8
25
6
22
15
(IG)
(ACC)
10A
ECU–IG
7. 5A
ECU
ACC
(BAT)
(BAT)
(BAT)
25A
DOOR
NO. 2
10A
HORN
30A
MAIN
2
1
3
1
5
HORN
Relay
HEAD
Relay
2
5
2
3
17 1K
10 1C
25 1C
30 1C
1 2C
8 2H
6 2C
W–B
O
G–B
B
B
G–B
O
W–B
IE
∗ 5 : w/ Power Slide Door
∗ 6 : w/o Power Slide Door

○ : Parts Location

Code		See Page	Code		See Page	Code		See Page
A9	A	38	F6	A	36	J34	B	40
	B	38	F7	B	36	J37		43
A21	B	38	I14		39	J38		43
B6	A	38	I16		39	J41		43
B7	B	38	J1		37	J42		43
B8	C	38	J3	A	40	K1		37
B9	D	38	J4	B	40	K4		40
B11		42	J11	A	40	P11		44
C10		39	J12	B	40	P14		44
D4		39	J13	A	40	S22		45
D7		42	J14	B	40	S25		45
D8		42	J18		40	S28		45
D11		42	J19		40	S29		45
D12		42	J20		40	T1		37
E3		36	J33	A	40	T7		41

⬭ : Junction Block and Wire Harness Connector

Code	See Page	Junction Block and Wire Harness (Connector Location)
1A	31	Engine Room Main Wire and Driver Side J/B (Lower Finish Panel)
1C		
1E	31	Instrument Panel Wire and Driver Side J/B (Lower Finish Panel)
1H	30	
1J	31	
1K		
1L		
1P	31	Floor No.1 Wire and Driver Side J/B (Lower Finish Panel)
2C	24	Engine Room Main Wire and Engine Room J/B (Engine Compartment Left)
2H		

▭ : Connector Joining Wire Harness and Wire Harness

Code	See Page	Joining Wire Harness and Wire Harness (Connector Location)
IA1	52	Front Door LH Wire and Instrument Panel Wire (Left Kick Panel)
ID2	52	Roof Wire and Instrument Panel Wire (Near the Driver Side J/B)
IM1	53	Front Door RH Wire and Instrument Panel Wire (Right Kick Panel)
IM2		
BD1	54	Rear Door No.2 Wire and Floor No.1 Wire (On the Left Rear Wheel House)
BG1	55	Back Door No.1 Wire and Floor No.1 Wire (Left Rear Quarter Panel)
BH1	55	Floor No.1 Wire and Floor No.1 Wire (Left Rear Quarter Panel)
BJ1	55	Rear Door No.1 Wire and Floor No.2 Wire (On the Right Rear Wheel House)

▽ : Ground Points

Code	See Page	Ground Points Location
EA	50	Front Side of the Right Fender Apron
IE	52	Left Kick Panel
IF	52	Instrument Panel Brace LH
IG	52	Right Kick Panel
BH	54	Under the Left Center Pillar
BL	54	Right Rear Quarter Panel
BM	54	Left Rear Quarter Panel
BN	54	Left Side of the Back Door