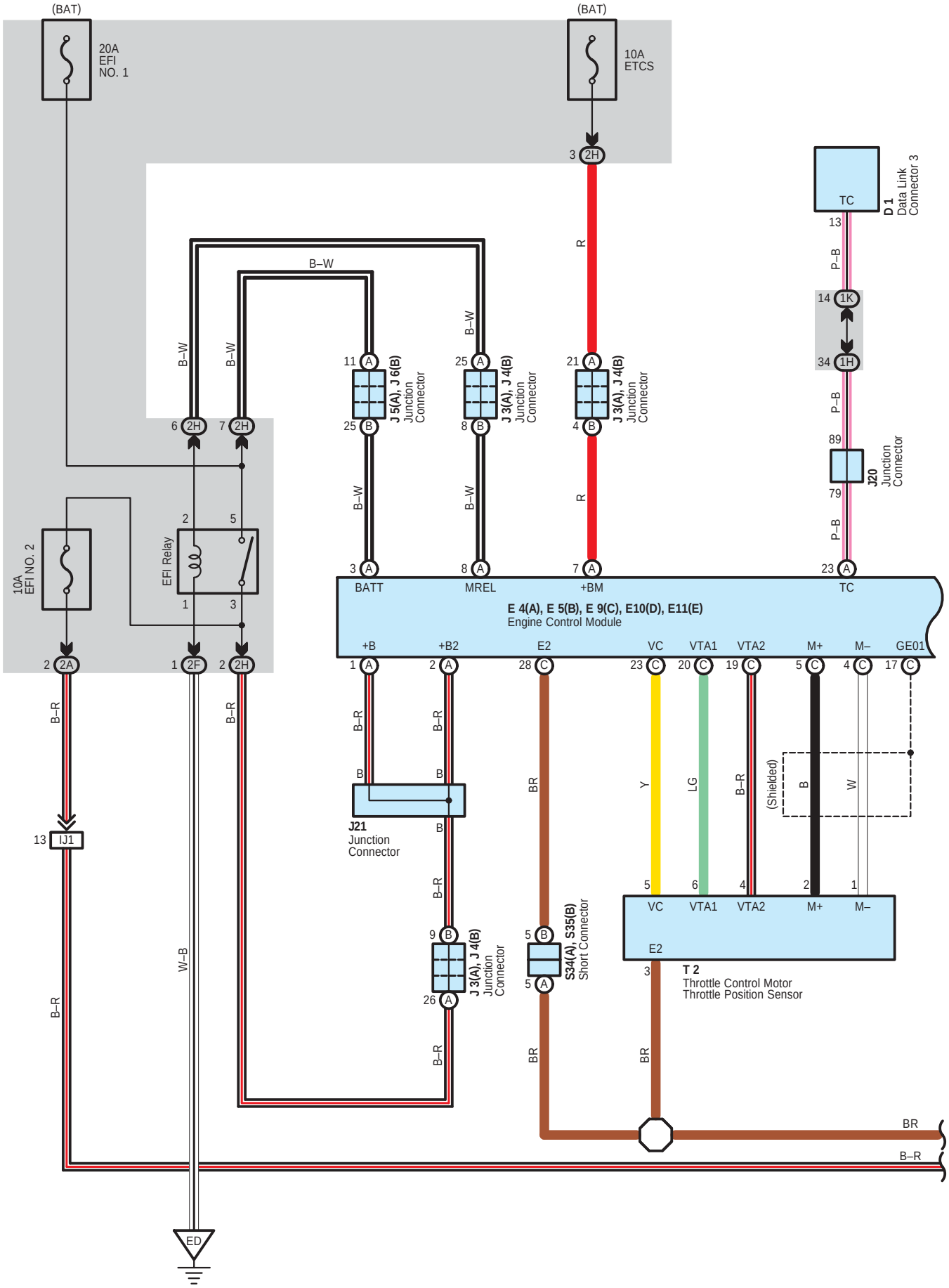
(BAT)
20A
EFI
NO. 1
(BAT)
10A
ETCS
3 2H
R
TC
13
D 1
Data Link
Connector 3
P–B
14 1K
34 1H
P–B
89
79
J20
Junction
Connector
P–B
23 A
TC
B–W
B–W
B–W
B–W
11 A
25 B
J 5(A), J 6(B)
Junction
Connector
25 A
8 B
J 3(A), J 4(B)
Junction
Connector
21 A
4 B
J 3(A), J 4(B)
Junction
Connector
6 2H
7 2H
B–W
B–W
R
10A
EFI NO. 2
EFI Relay
2
5
1
3
3 A
8 A
7 A
BATT
MREL
+BM
E 4(A), E 5(B), E 9(C), E10(D), E11(E)
Engine Control Module
+B
+B2
E2
VC
VTA1
VTA2
M+
M–
GE01
2 2A
1 2F
2 2H
1 A
2 A
28 C
23 C
20 C
19 C
5 C
4 C
17 C
B–R
B–R
B–R
B–R
BR
Y
LG
B–R
B
W
(Shielded)
B
B
J21
Junction
Connector
B
13 IJ1
B–R
9 B
26 A
J 3(A), J 4(B)
Junction
Connector
B–R
W–B
5 B
5 A
S34(A), S35(B)
Short Connector
5
6
4
2
1
VC
VTA1
VTA2
M+
M–
E2
3
T 2
Throttle Control Motor
Throttle Position Sensor
BR
BR
BR
B–R
B–R
ED

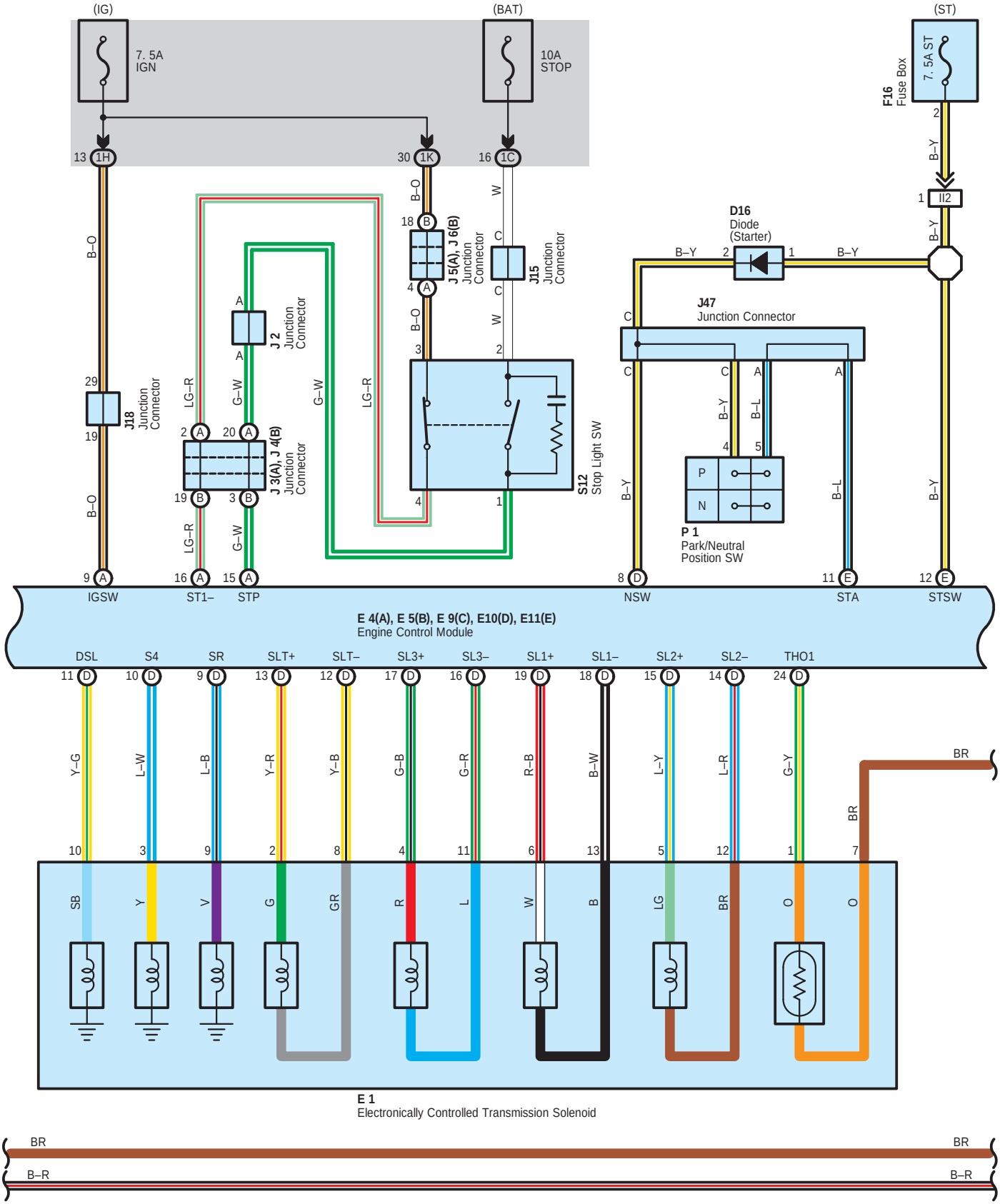
(IG)
7. 5A
IGN
(BAT)
10A
STOP
(ST)
F16
Fuse Box
7. 5A ST
D16
Diode
(Starter)
J47
Junction Connector
J 5(A), J 6(B)
Junction
Connector
J15
Junction
Connector
J 2
Junction
Connector
J 3(A), J 4(B)
Junction
Connector
J18
Junction
Connector
S12
Stop Light SW
P 1
Park/Neutral
Position SW
IGSW
ST1–
STP
NSW
STA
STSW
E 4(A), E 5(B), E 9(C), E10(D), E11(E)
Engine Control Module
DSL
S4
SR
SLT+
SLT–
SL3+
SL3–
SL1+
SL1–
SL2+
SL2–
THO1
E 1
Electronically Controlled Transmission Solenoid

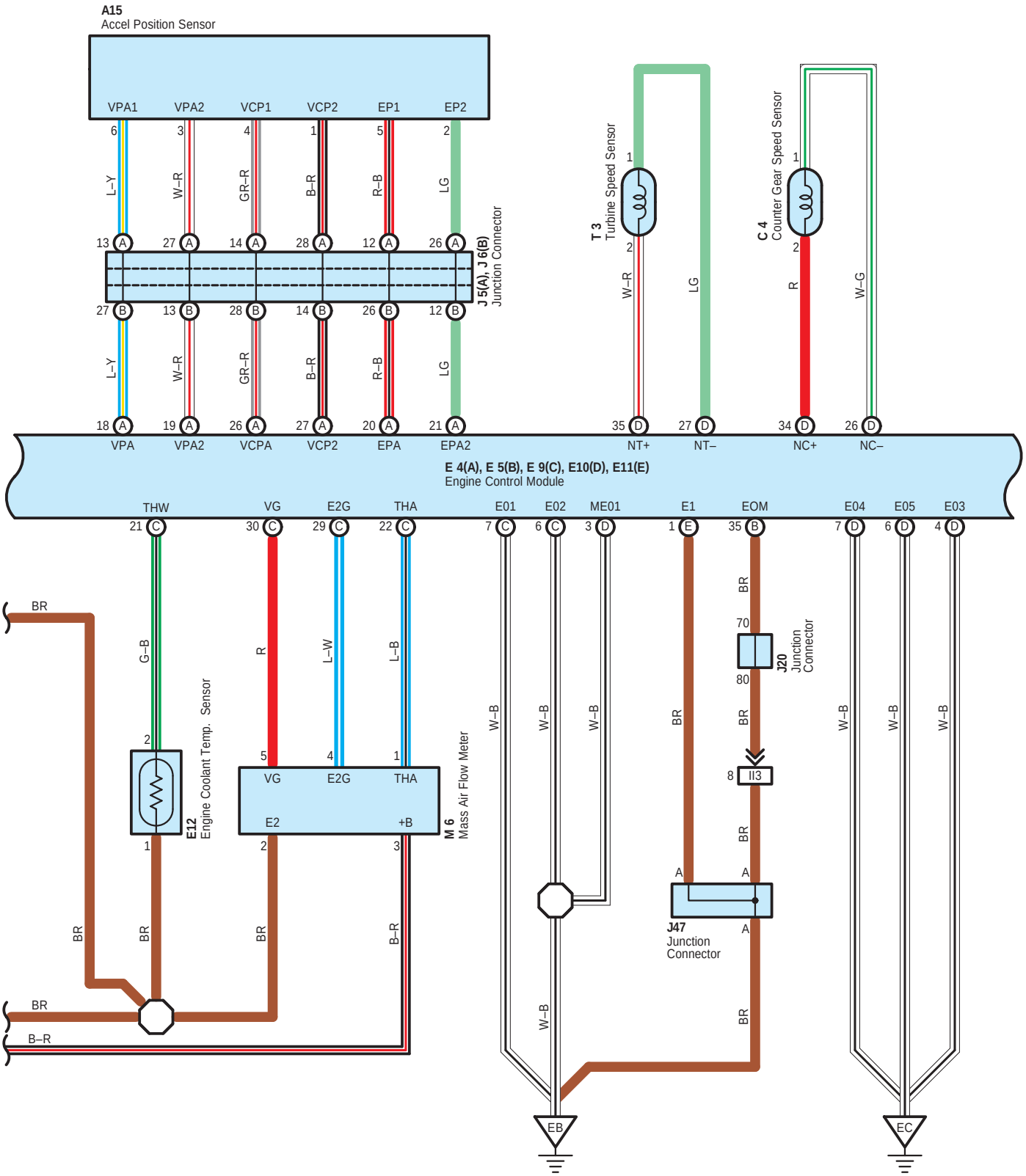
A15
Accel Position Sensor
VPA1
VPA2
VCP1
VCP2
EP1
EP2
L–Y
W–R
GR–R
B–R
R–B
LG
J 5(A), J 6(B)
Junction Connector
T 3
Turbine Speed Sensor
C 4
Counter Gear Speed Sensor
R
W–G
VPA
VPA2
VCPA
VCP2
EPA
EPA2
NT+
NT–
NC+
NC–
E 4(A), E 5(B), E 9(C), E10(D), E11(E)
Engine Control Module
THW
VG
E2G
THA
E01
E02
ME01
E1
EOM
E04
E05
E03
G–B
L–W
L–B
W–B
BR
B–R
E12
Engine Coolant Temp. Sensor
M 6
Mass Air Flow Meter
J20
Junction Connector
J47
Junction Connector
II3
E2
+B
EB
EC

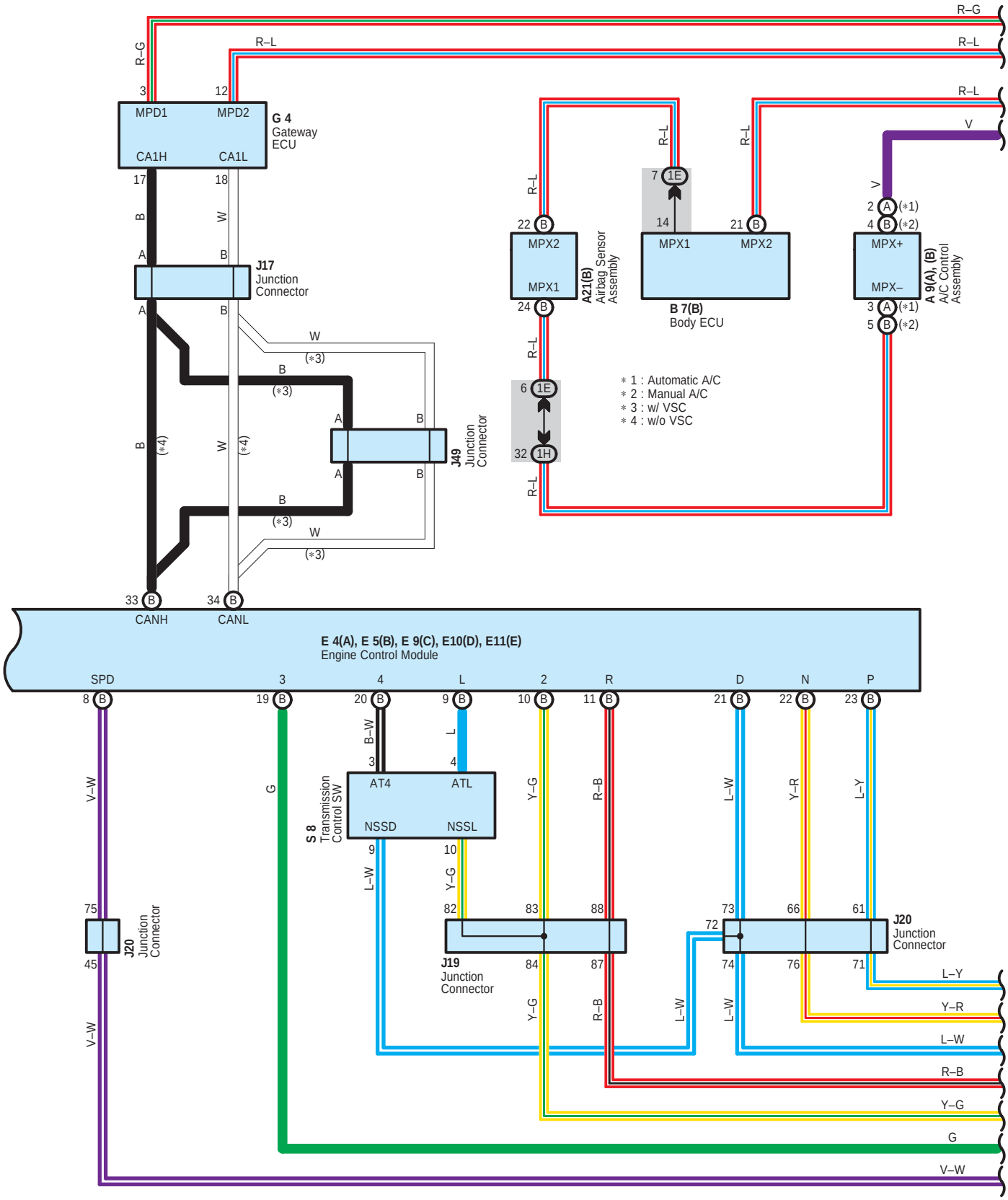
R–G
R–L
3
12
MPD1
MPD2
CA1H
CA1L
G 4
Gateway
ECU
17
18
B
W
A
B
J17
Junction
Connector
W
(*3)
B
(*3)
A
B
J49
Junction
Connector
B
(*4)
W
(*4)
A
B
B
(*3)
W
(*3)
33
B
34
B
CANH
CANL
R–L
22
B
MPX2
MPX1
A21(B)
Airbag Sensor
Assembly
24
B
R–L
6
1E
32
1H
R–L
R–L
7
1E
14
MPX1
MPX2
21
B
B 7(B)
Body ECU
V
2
A
(*1)
4
B
(*2)
MPX+
MPX–
A 9(A), (B)
A/C Control
Assembly
3
A
(*1)
5
B
(*2)
* 1 : Automatic A/C
* 2 : Manual A/C
* 3 : w/ VSC
* 4 : w/o VSC
E 4(A), E 5(B), E 9(C), E10(D), E11(E)
Engine Control Module
SPD
3
4
L
2
R
D
N
P
8
B
19
B
20
B
9
B
10
B
11
B
21
B
22
B
23
B
B–W
L
3
4
AT4
ATL
NSSD
NSSL
S 8
Transmission
Control SW
9
10
Y–G
R–B
L–W
Y–R
L–Y
G
V–W
75
J20
Junction
Connector
45
V–W
L–W
Y–G
82
83
88
J19
Junction
Connector
84
87
Y–G
R–B
73
66
61
72
J20
Junction
Connector
74
76
71
L–W
L–W
L–Y
Y–R
L–W
R–B
Y–G
G
V–W

ECT and A/T Indicator

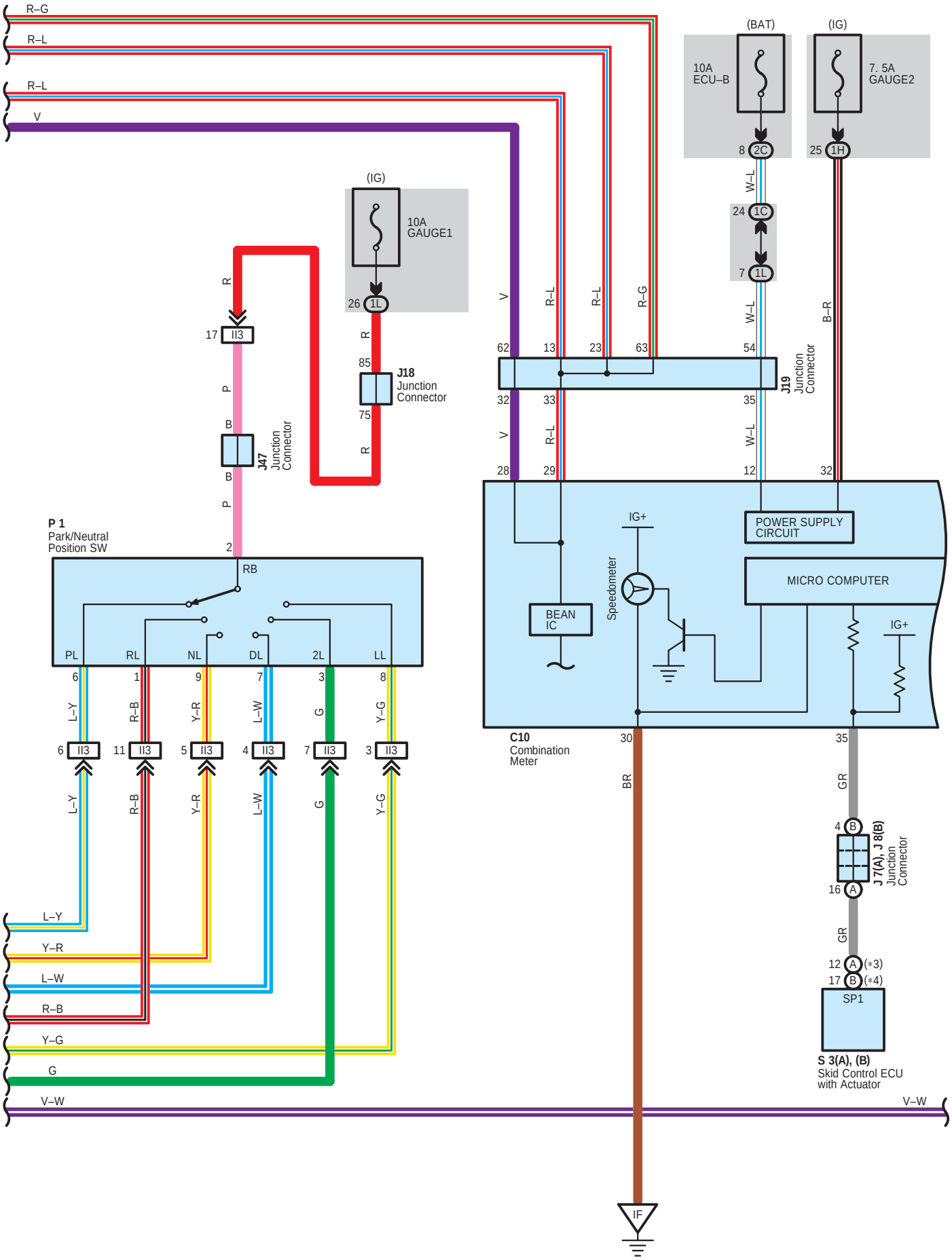

＊3 : w/ VSC
＊4 : w/o VSC

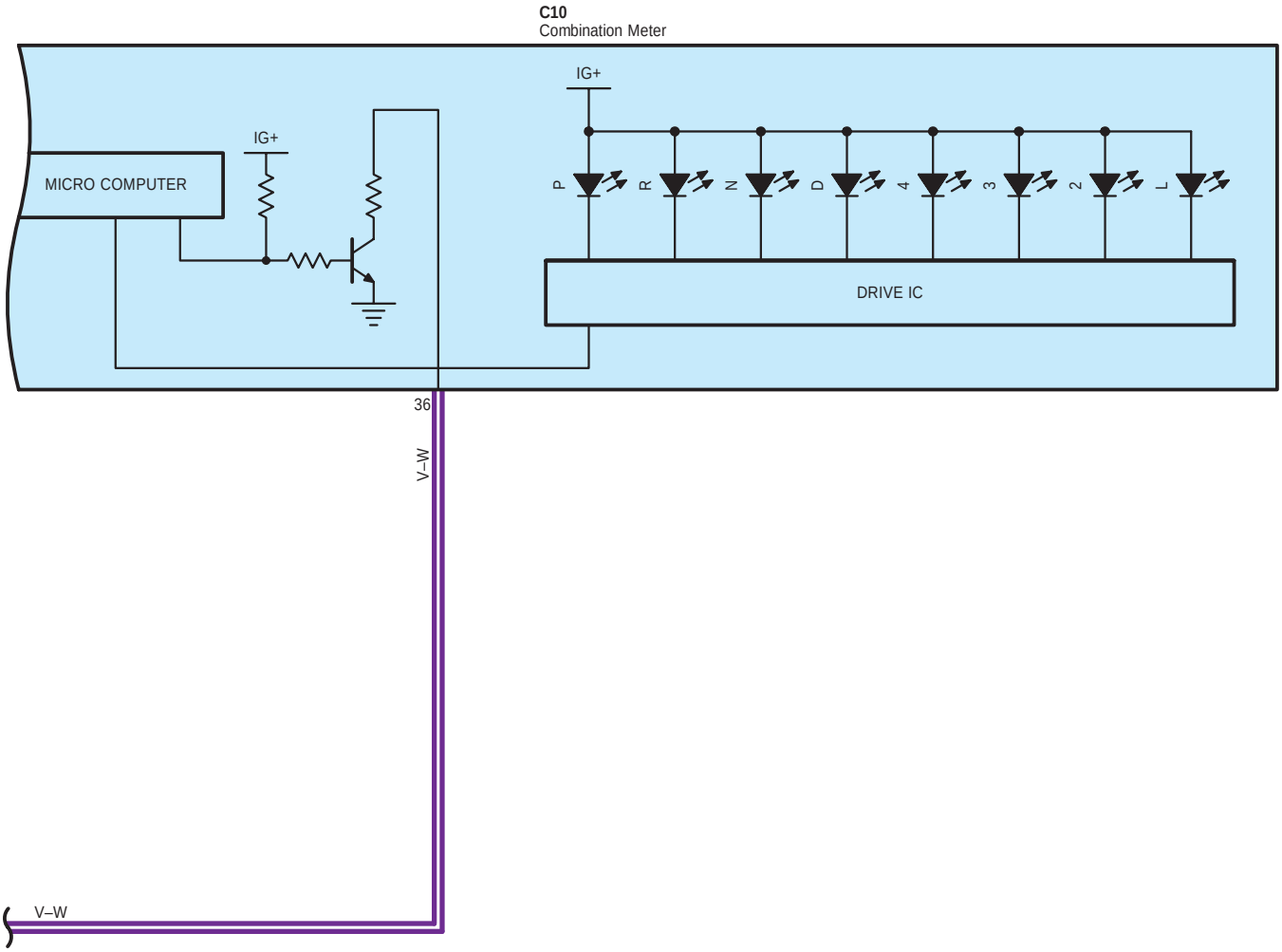

System Outline

Previous automatic transaxle have selected each gear shift using mechanically controlled throttle hydraulic pressure, governor hydraulic pressure and lock–up hydraulic pressure. The electronically controlled transmission, however, electrically controls the line pressure, throttle pressure, lock–up pressure and accumulator pressure etc. through the solenoid valve. The electronically controlled transmission is a system which precisely controls gear shift timing and lock–up timing in response to the vehicle's driving conditions and the engine condition detected by various sensors. It makes smooth driving possible by shift selection for each gear which is the most appropriate to the driving conditions at that time, and by preventing downing, squat and gear shift shock when starting off.

1. Gear Shift Operation

When driving, the engine warm up condition is input as a signal to TERMINAL THW of the engine control module from the engine coolant temp. sensor and the vehicle speed signal is input to TERMINAL SPD of the engine control module. At the same time, the throttle valve opening signal from the throttle position sensor is input to TERMINALS VTA1 and VTA2 of the engine control module as throttle angle signal.
Based on these signals, the engine control module selects the best shift position for the driving conditions and sends current to the electronically controlled transmission solenoid.

2. Lock–Up Operation

When each signal makes engine control module recognize that LOCK–UP condition is satisfied, the current flows from engine control module TERMINAL DSL to electronically controlled transmission solenoid TERMINAL 10. At the same time, the current flows engine control module TERMINAL SL1+ to electronically controlled transmission solenoid TERMINAL 6 and from TERMINAL 13 to engine control module TERMINAL SL1–. This works LOCK–UP solenoid to perform LOCK–UP operation.

3. Stop Light SW Circuit

If the brake pedal is depressed (Stop light SW on) when driving in lock–up condition, a signal is input to TERMINAL STP of the engine control module. The engine control module operates and cuts the current to the solenoid to release lock–up.

: Parts Location

Code	See Page	Code	See Page	Code	See Page
A9 A	38	E12	36	J21	40
A9 B	38	F16	39	J47	40
A15	38	G4	39	J48	40
A21 B	38	J2	37	J49	40
B7 B	38	J3 A	40	M6	37
C4	36	J4 B	40	P1	37
C10	39	J5 A	40	S3 A	37
D1	39	J6 B	40	S3 B	37
D16	39	J7 A	40	S8	41
E1	36	J8 B	40	S12	41
E4 A	39	J15	40	S34 A	41
E5 B	39	J17	40	S35 B	41
E9 C	39	J18	40	T2	37
E10 D	39	J19	40	T3	37
E11 E	39	J20	40		

: Junction Block and Wire Harness Connector

Code	See Page	Junction Block and Wire Harness (Connector Location)
1C	31	Engine Room Main Wire and Driver Side J/B (Lower Finish Panel)
1E	31	Instrument Panel Wire and Driver Side J/B (Lower Finish Panel)
1H	30	
1K	31	
1L		
2A	24	Engine Room Main Wire and Engine Room J/B (Engine Compartment Left)
2C		
2F		
2H		

: **Connector Joining Wire Harness and Wire Harness**

Code	See Page	Joining Wire Harness and Wire Harness (Connector Location)
II2	53	Engine Wire and Instrument Panel Wire (Right Kick Panel)
II3		
IJ1	53	Engine Wire and Engine Room Main Wire (Right Kick Panel)

: **Ground Points**

Code	See Page	Ground Points Location
EB	50	Rear Bank of Right Cylinder Head
EC	50	Rear Bank of Left Cylinder Head
ED	50	Front Side of the Left Fender Apron
IF	52	Instrument Panel Brace LH