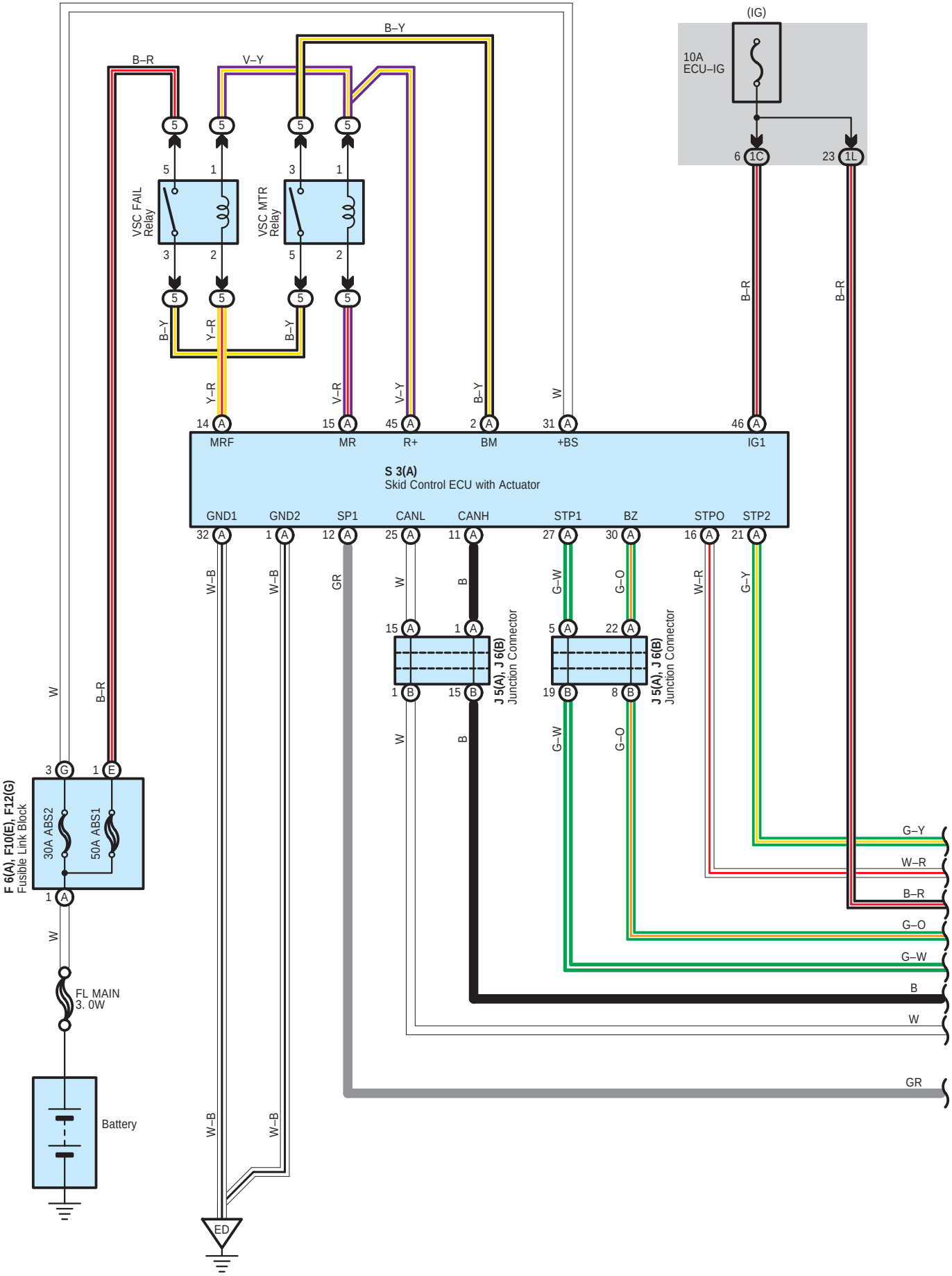
(IG)
10A
ECU–IG
6 1C
23 1L
B–R
B–Y
V–Y
VSC FAIL
Relay
VSC MTR
Relay
Y–R
V–R
V–Y
B–Y
W
14 A
15 A
45 A
2 A
31 A
46 A
MRF
MR
R+
BM
+BS
IG1
S 3(A)
Skid Control ECU with Actuator
GND1
GND2
SP1
CANL
CANH
STP1
BZ
STPO
STP2
32 A
1 A
12 A
25 A
11 A
27 A
30 A
16 A
21 A
W–B
GR
W
B
G–W
G–O
W–R
G–Y
J 5(A), J 6(B)
Junction Connector
F 6(A), F10(E), F12(G)
Fusible Link Block
30A ABS2
50A ABS1
3 G
1 E
1 A
FL MAIN
3. 0W
Battery
ED

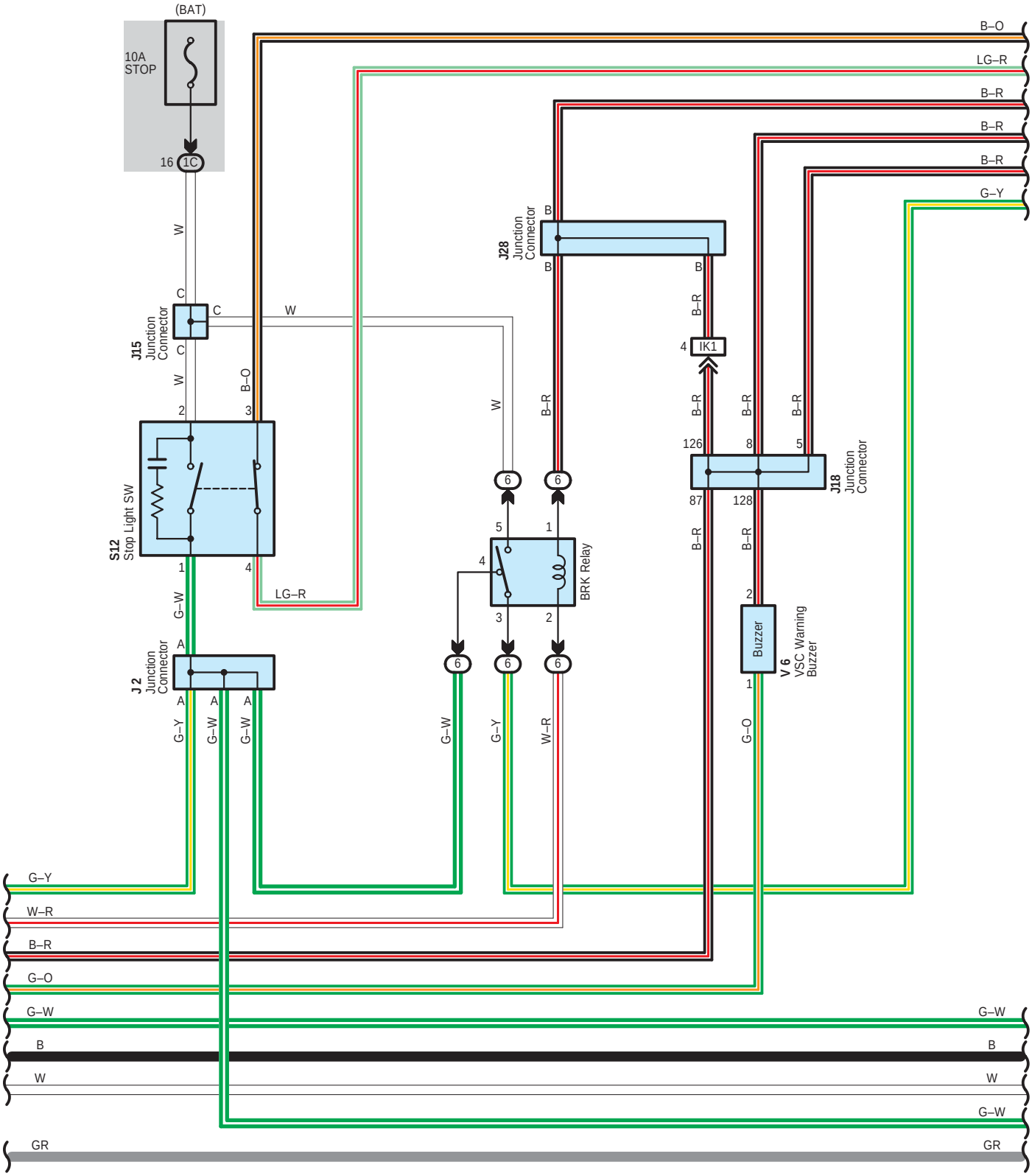
(BAT)
10A
STOP
16
1C
W
C
J15
Junction
Connector
C
W
C
W
B–O
2
3
S12
Stop Light SW
1
4
G–W
LG–R
A
J 2
Junction
Connector
A
A
A
G–Y
G–W
G–W
J28
Junction
Connector
B
B
B–R
4
IK1
B–R
126
87
B–R
8
128
B–R
5
J18
Junction
Connector
B–R
B–R
B–R
W
6
6
5
1
4
BRK Relay
3
2
6
6
6
G–W
G–Y
W–R
2
Buzzer
V 6
VSC Warning
Buzzer
1
G–O
B–O
LG–R
B–R
B–R
B–R
G–Y
G–Y
W–R
B–R
G–O
G–W
B
W
G–W
GR
G–W
B
W
G–W
GR

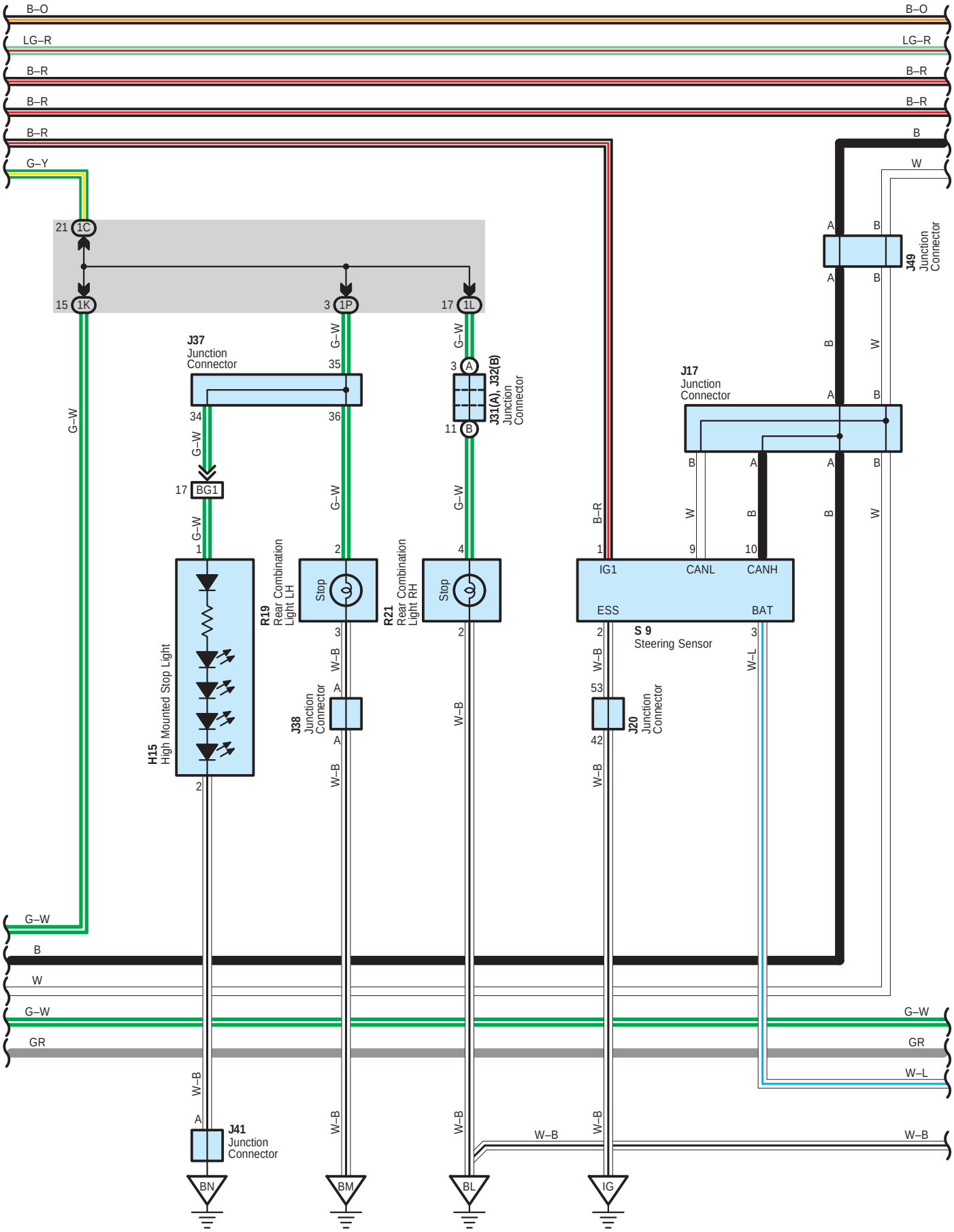
B–O
LG–R
B–R
B–R
B–R
G–Y
21 1C
15 1K
3 1P
17 1L
J37
Junction
Connector
35
34
36
G–W
17 BG1
1
2
4
3 A
11 B
J31(A), J32(B)
Junction
Connector
J49
Junction
Connector
J17
Junction
Connector
B–R
W
B
IG1
CANL
CANH
ESS
BAT
S 9
Steering Sensor
H15
High Mounted Stop Light
R19
Rear Combination
Light LH
R21
Rear Combination
Light RH
Stop
W–B
W–L
J38
Junction
Connector
J20
Junction
Connector
53
42
GR
J41
Junction
Connector
BN
BM
BL
IG

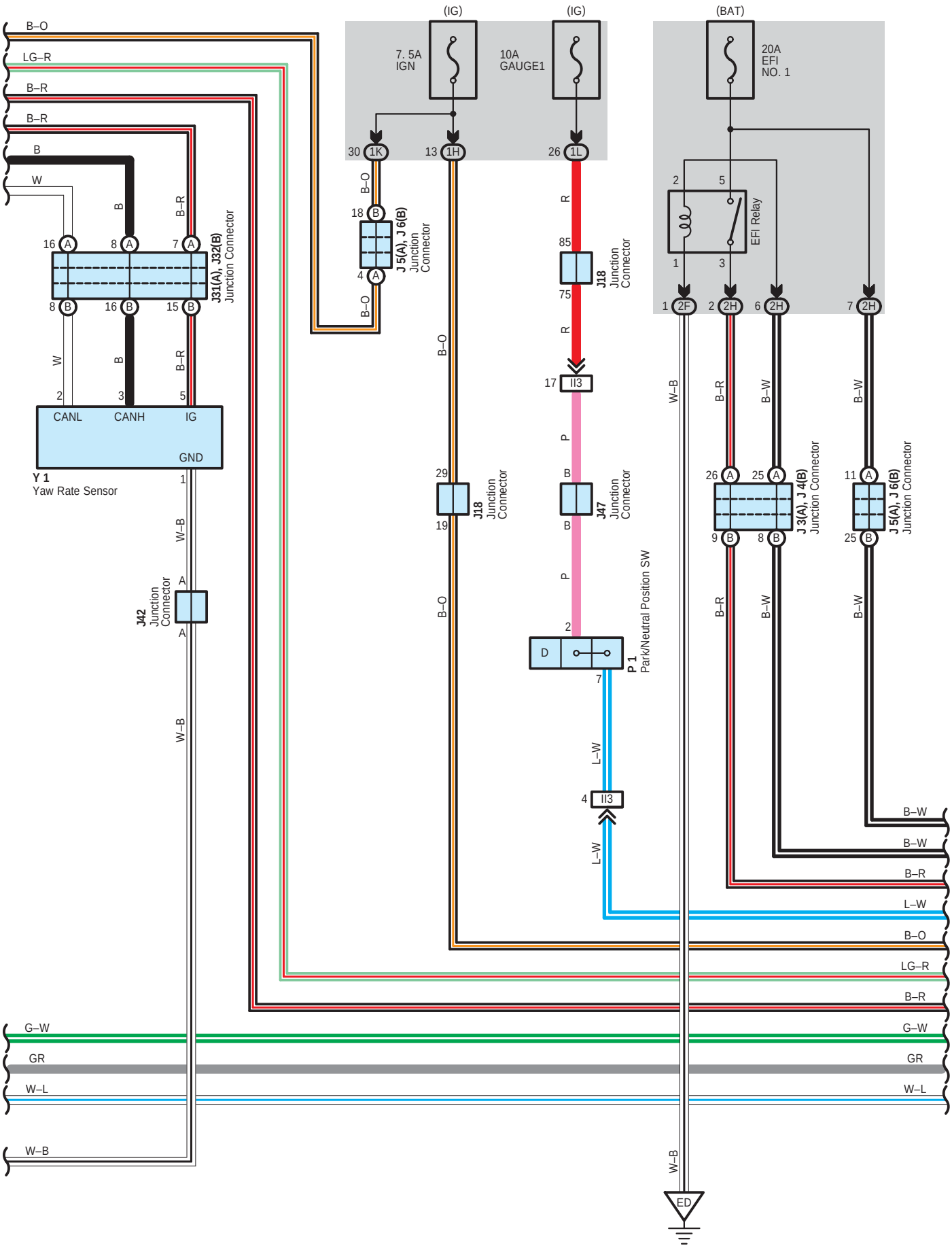
(IG)
(IG)
(BAT)
7. 5A
IGN
10A
GAUGE1
20A
EFI
NO. 1
EFI Relay
J31(A), J32(B)
Junction Connector
J 5(A), J 6(B)
Junction
Connector
J18
Junction
Connector
J47
Junction
Connector
J42
Junction
Connector
J 3(A), J 4(B)
Junction Connector
J 5(A), J 6(B)
Junction Connector
Y 1
Yaw Rate Sensor
P 1
Park/Neutral Position SW
CANL
CANH
IG
GND
B–O
LG–R
B–R
B
W
L–W
G–W
GR
W–L
W–B
B–W
ED

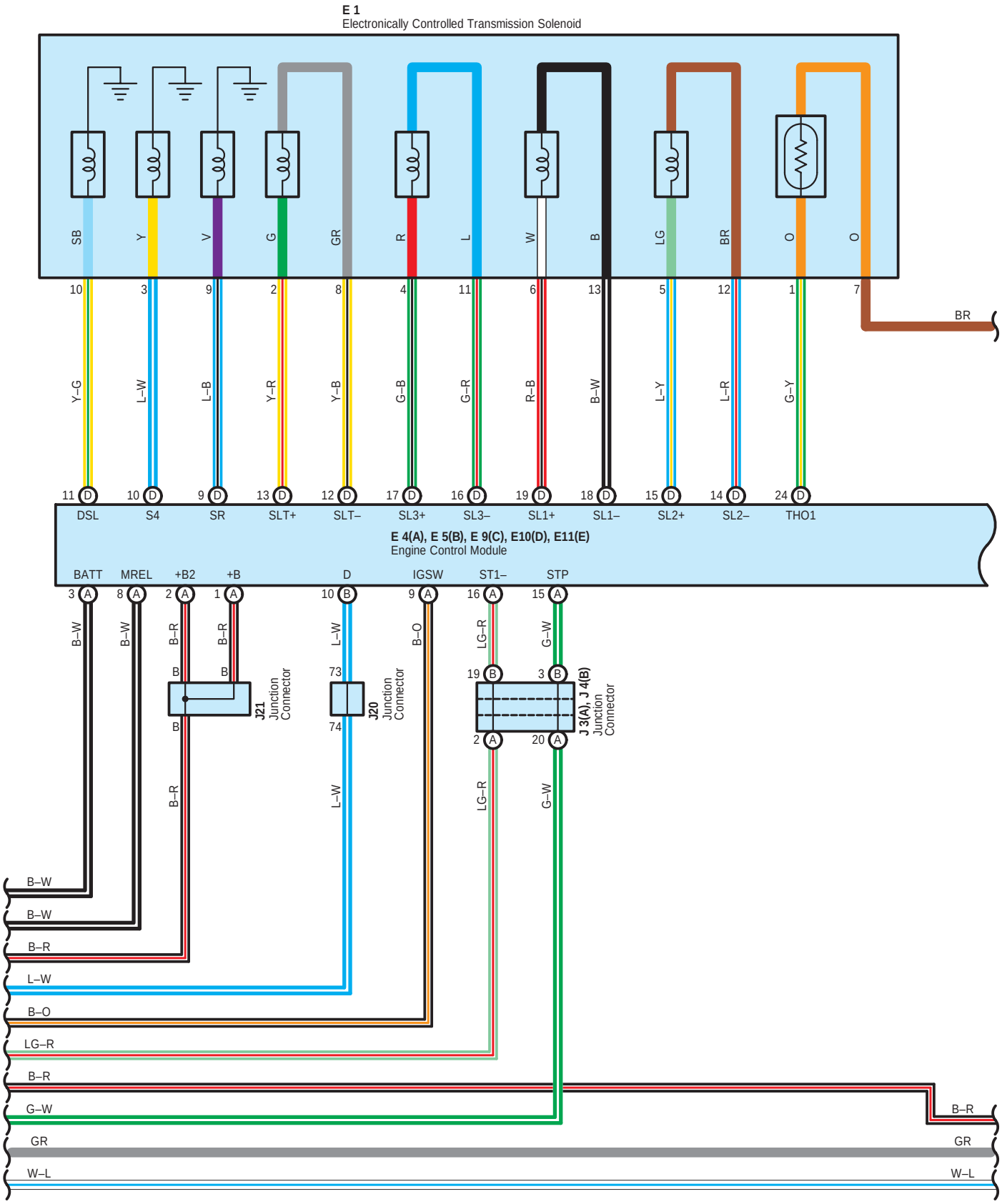
E 1
Electronically Controlled Transmission Solenoid
SB
Y
V
G
GR
R
L
W
B
LG
BR
O
O
10
3
9
2
8
4
11
6
13
5
12
1
7
BR
Y–G
L–W
L–B
Y–R
Y–B
G–B
G–R
R–B
B–W
L–Y
L–R
G–Y
11 D DSL
10 D S4
9 D SR
13 D SLT+
12 D SLT–
17 D SL3+
16 D SL3–
19 D SL1+
18 D SL1–
15 D SL2+
14 D SL2–
24 D THO1
E 4(A), E 5(B), E 9(C), E10(D), E11(E)
Engine Control Module
BATT
MREL
+B2
+B
D
IGSW
ST1–
STP
3 A
8 A
2 A
1 A
10 B
9 A
16 A
15 A
B–W
B–W
B–R
B–R
L–W
B–O
LG–R
G–W
B
B
73
74
19 B
3 B
2 A
20 A
J21 Junction Connector
J20 Junction Connector
J 3(A), J 4(B) Junction Connector
B–W
B–W
B–R
L–W
B–O
LG–R
B–R
G–W
GR
W–L
B–R
GR
W–L

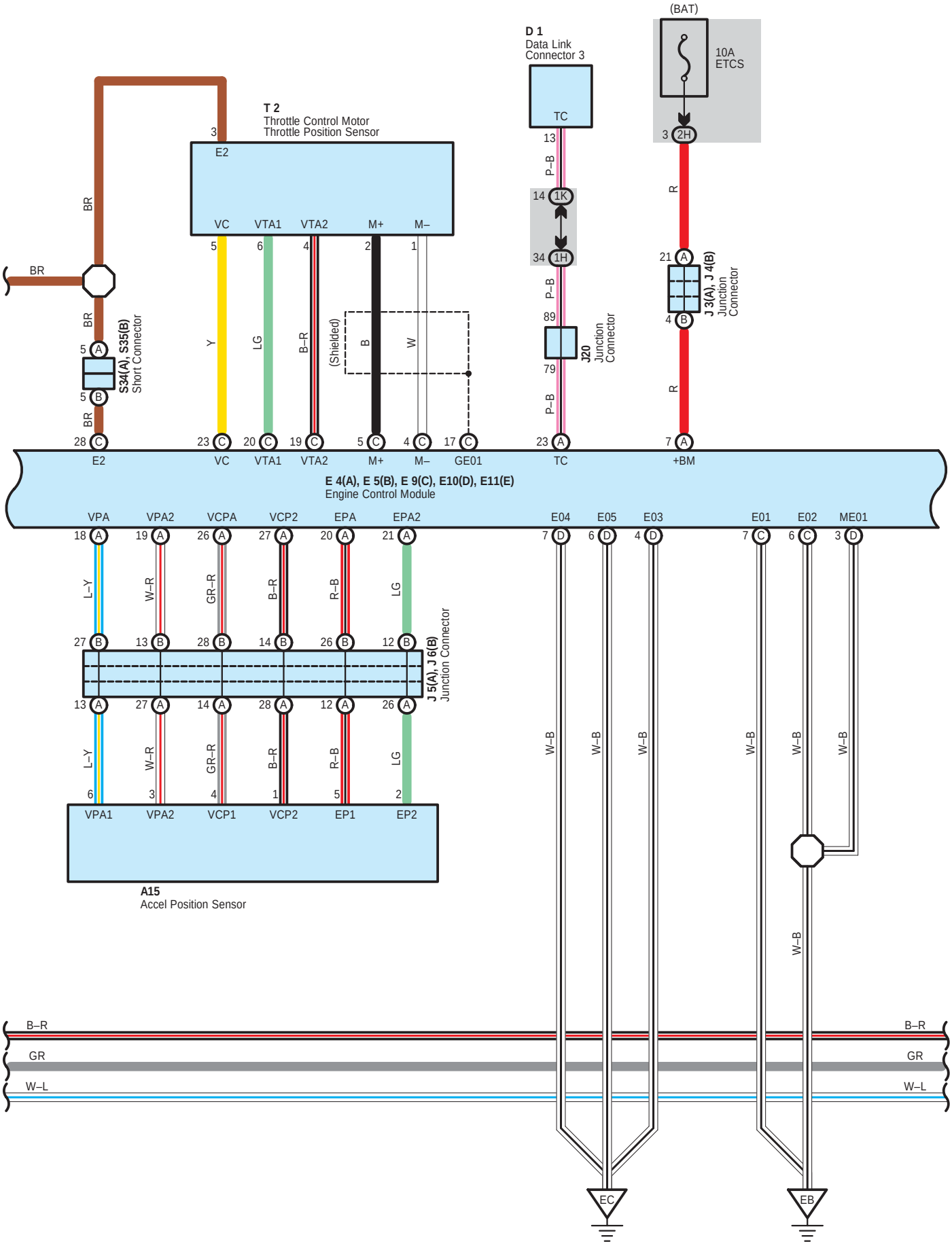
(BAT)
10A
ETCS
D 1
Data Link
Connector 3
TC
T 2
Throttle Control Motor
Throttle Position Sensor
E2
VC
VTA1
VTA2
M+
M–
(Shielded)
S34(A), S35(B)
Short Connector
J 3(A), J 4(B)
Junction
Connector
J20
Junction
Connector
E 4(A), E 5(B), E 9(C), E10(D), E11(E)
Engine Control Module
GE01
+BM
VPA
VPA2
VCPA
VCP2
EPA
EPA2
E04
E05
E03
E01
E02
ME01
J 5(A), J 6(B)
Junction Connector
VPA1
VPA2
VCP1
VCP2
EP1
EP2
A15
Accel Position Sensor
EC
EB
B–R
GR
W–L
BR
L–Y
W–R
GR–R
B–R
R–B
LG
P–B
R
Y
LG
B–R
B
W
W–B

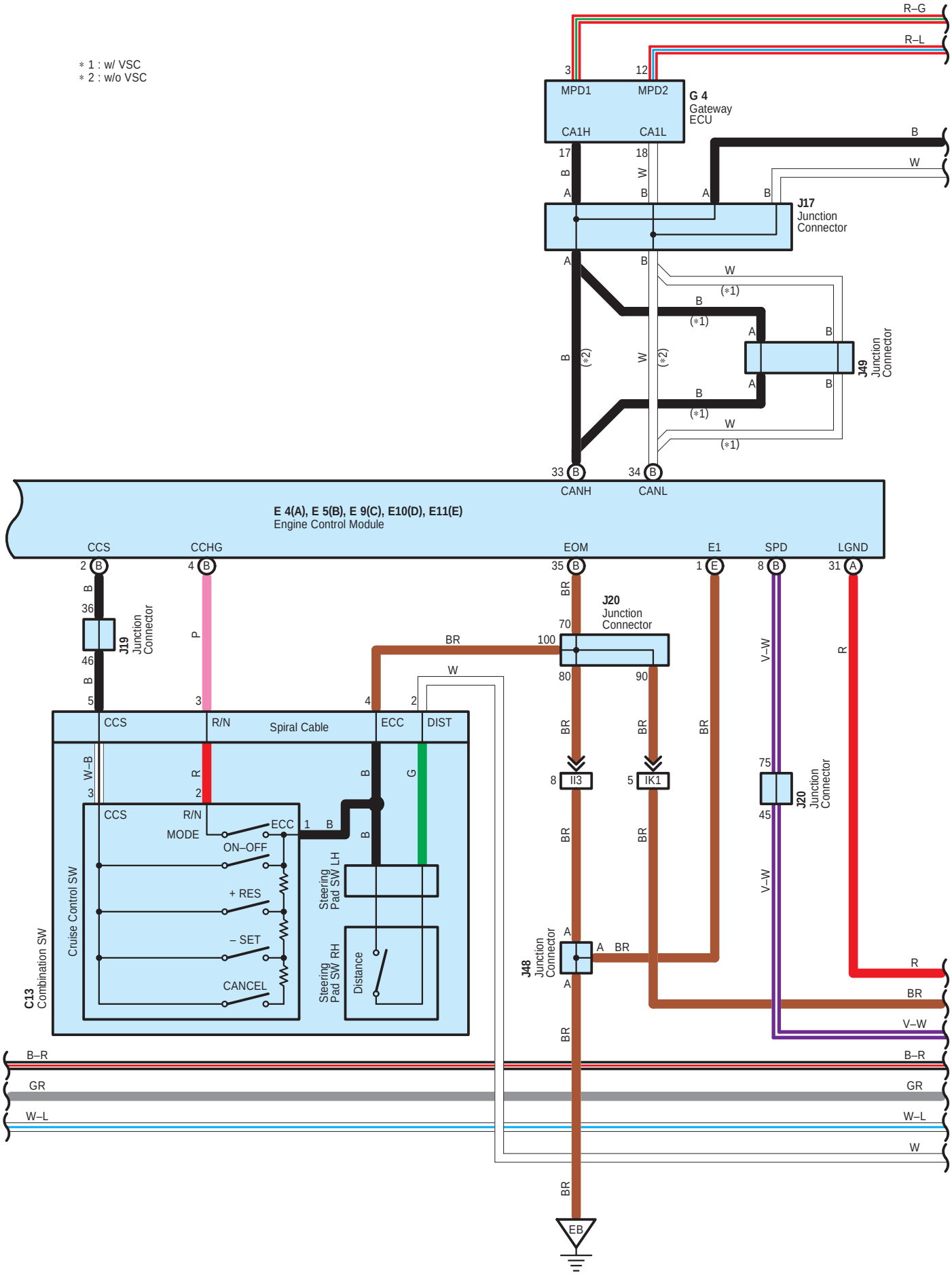
* 1 : w/ VSC
* 2 : w/o VSC
R–G
R–L
MPD1
MPD2
G 4
Gateway ECU
CA1H
CA1L
J17
Junction Connector
J49
Junction Connector
CANH
CANL
E 4(A), E 5(B), E 9(C), E10(D), E11(E)
Engine Control Module
CCS
CCHG
EOM
E1
SPD
LGND
J19
Junction Connector
J20
Junction Connector
Spiral Cable
R/N
ECC
DIST
C13
Combination SW
Cruise Control SW
MODE
ON–OFF
+ RES
– SET
CANCEL
Steering Pad SW LH
Steering Pad SW RH
Distance
J48
Junction Connector
II3
IK1
EB
B–R
GR
W–L
V–W

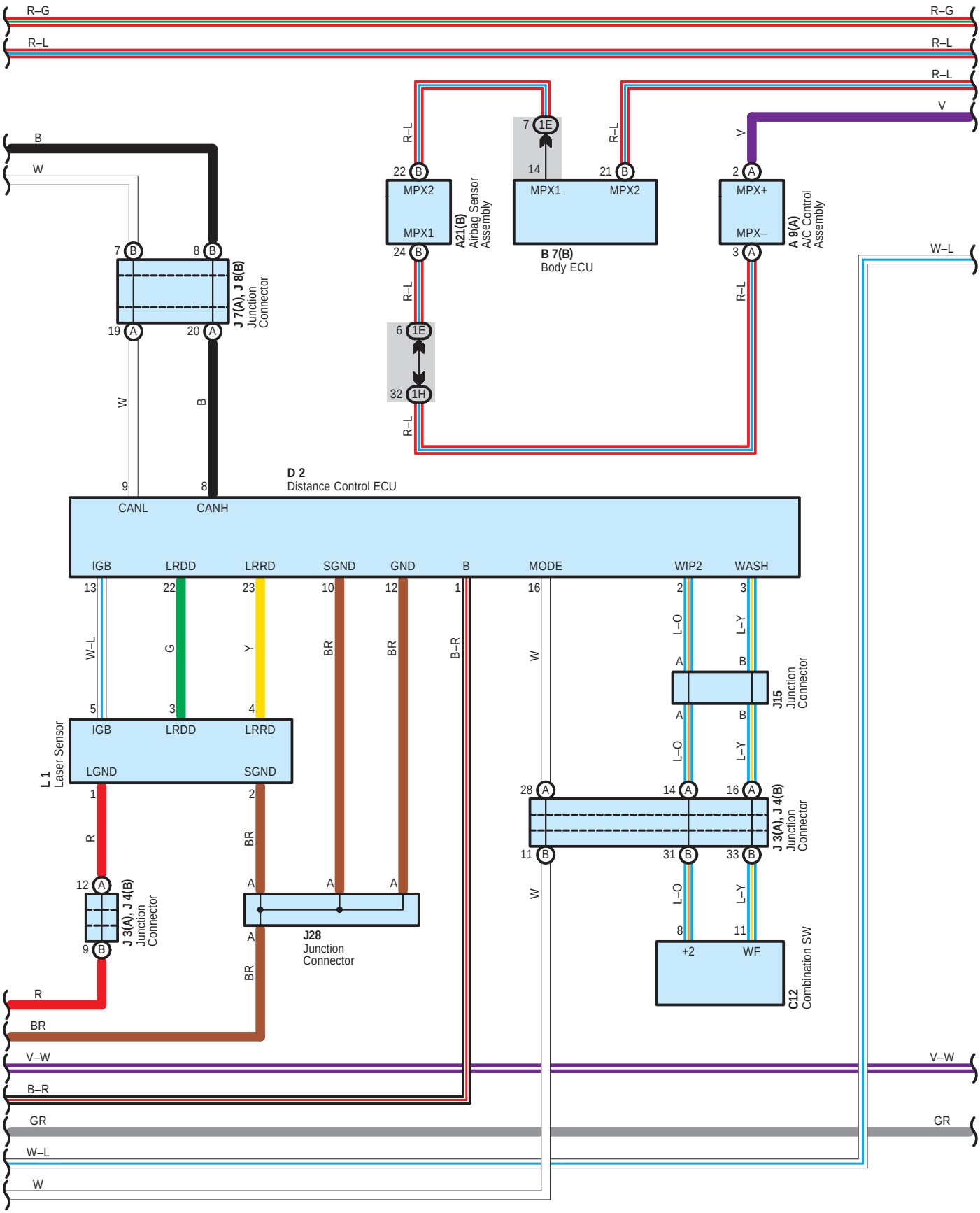
R–G
R–L
B
W
7 B
8 B
J 7(A), J 8(B)
Junction Connector
19 A
20 A
W
B
9
8
CANL
CANH
D 2
Distance Control ECU
IGB
LRDD
LRRD
SGND
GND
B
MODE
WIP2
WASH
13
22
23
10
12
1
16
2
3
W–L
G
Y
BR
BR
B–R
W
L–O
L–Y
5
3
4
L 1
Laser Sensor
LGND
SGND
1
2
R
BR
12 A
9 B
J 3(A), J 4(B)
Junction Connector
A
J28
Junction Connector
J15
Junction Connector
28 A
14 A
16 A
11 B
31 B
33 B
J 3(A), J 4(B)
Junction Connector
8
11
+2
WF
C12
Combination SW
R–L
V
22 B
MPX2
MPX1
24 B
A21(B)
Airbag Sensor Assembly
7 1E
14
MPX1
MPX2
21 B
B 7(B)
Body ECU
6 1E
32 1H
2 A
MPX+
MPX–
3 A
A 9(A)
A/C Control Assembly
V–W
GR
W–L

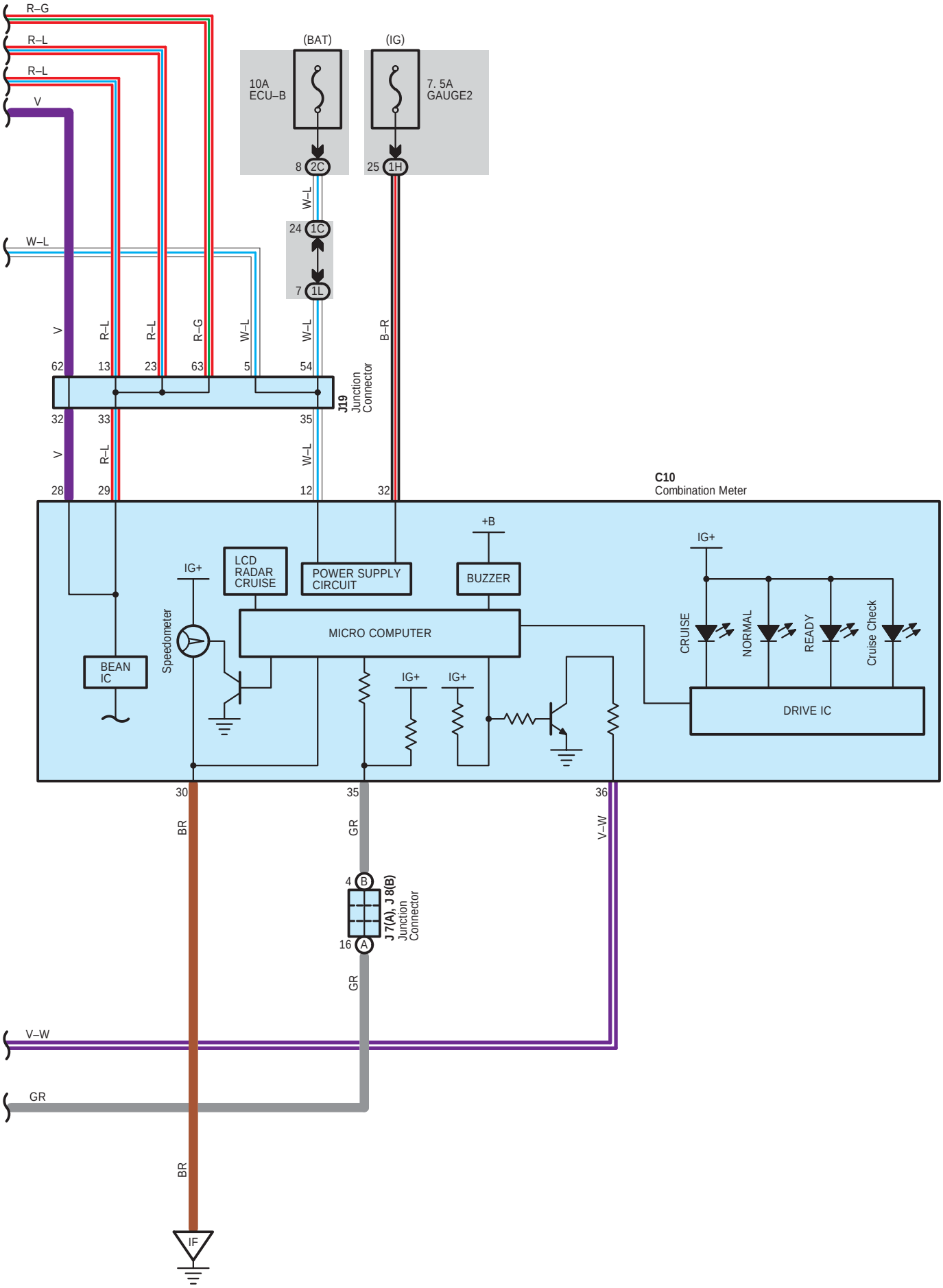
R–G
R–L
R–L
V
W–L
(BAT)
(IG)
10A
ECU–B
7. 5A
GAUGE2
8 2C
25 1H
W–L
24 1C
7 1L
B–R
J19
Junction
Connector
62
13
23
63
5
54
32
33
35
28
29
12
32
C10
Combination Meter
+B
IG+
LCD
RADAR
CRUISE
POWER SUPPLY
CIRCUIT
BUZZER
Speedometer
MICRO COMPUTER
BEAN
IC
CRUISE
NORMAL
READY
Cruise Check
DRIVE IC
30
35
36
BR
GR
V–W
4 B
16 A
J 7(A), J 8(B)
Junction
Connector
V–W
GR
BR
IF

System Outline

The dynamic laser cruise control system allows the vehicle to travel at a constant speed. Also according to the signals from the laser sensor and steering sensor, the system controls the vehicle to travel maintaining a certain following distance in proportion to the speed of the vehicle ahead.

1. Setting

<In vehicle–to–vehicle distance control mode>

During driving under the ON–OFF SW ON condition (The cruise indicator is lit), when the – SET SW is operated at the vehicle speed higher than the lower limit vehicle speed for setting, the vehicle speed at the time the SW is turned OFF is set as a set speed and the control starts. However, when the SW is operated at the speed higher than the higher limit vehicle speed for setting, the higher limit vehicle speed is set as a set speed and the control starts.

<In constant speed control mode>

During driving under the ON–OFF SW ON condition (The cruise indicator is lit), when the – SET SW is operated at a vehicle speed between the lower limit vehicle speed for setting and the high speed limit, the vehicle speed at the time the SW is turned OFF is set as a set speed and the control starts.

2. Changing Method of the Set Speed

<In vehicle–to–vehicle distance control mode>

(1) How to lower the set speed

* During driving under cruise control, when the – SET SW is momentarily operated (For approximately 0.6 seconds), the set speed decreases in increments of 5 km/h per SW operation.
  When the – SET SW is kept ON, the set speed decreases continuously in increments of 5 km/h until the SW is turned off.
  However, if the set speed reaches the lower limit vehicle speed for setting, the set speed cannot be decreased any further.
  When the set speed is changed, the vehicle decelerates to that speed (In some cases, the vehicle may accelerate).
* If the – SET SW is turned from ON to OFF when the vehicle speed exceeds the higher limit vehicle speed for setting while the vehicle runs down a slope, the higher limit vehicle speed is stored in the memory as the set speed to control.

(2) How to raise the set speed

* During driving under cruse control, when the + RES SW is momentarily operated (Approximately for 0.6 seconds), the set speed increases in increments of 5 km/h per SW operation.
  When the SW is kept ON, the set speed increases continuously in increments of 5 km/h until the SW is turned off.
  However, if the set speed reaches the higher limit vehicle speed for setting, the set speed cannot be increased any further.
  When the set speed is changed, the vehicle accelerates to that speed (In some cases, the vehicle may decelerate).

NOTE:

The vehicle speed at the time the – SET SW was turned OFF is not reset if the – SET SW is turned ON when the vehicle is accelerated by depressing the accelerator pedal. In such cases, the set speed decreases by 5 km/h as described above.

<In constant speed control mode>

(1) Deceleration

* During driving under cruise control, turning ON the – SET SW decelerates the vehicle while the SW is ON. The vehicle speed is controlled using the vehicle speed at the time the SW is turned OFF as a set speed.
  If the – SET SW is turned from ON to OFF when the vehicle speed exceeds the high speed limit while the vehicle runs down a slope, the vehicle is controlled with the high speed limit as a set speed.
* When the – SET SW is momentarily operated (For approximately 0.6 seconds), the set speed decreases in increments of 1.6 km/h per SW operation. However, if the SW is operated when the set speed differs from the actual vehicle speed by 5 km/h or more, the vehicle is controlled using the vehicle speed at the time the SW is turned OFF as a set speed.

(2) Acceleration

* During driving under cruise control, turning ON the + RES SW accelerates the vehicle while the SW is ON. The vehicle speed is controlled using the vehicle speed at the time the SW is turned OFF as a set speed.
  When the vehicle speed exceeds the high speed limit during the + RES SW operation, the vehicle is controlled with the high speed limit until the SW operation is finished. After the SW operation, the vehicle is controlled with the high speed limit as a set speed.
* When the + RES SW is momentarily operated (For approximately 0.6 seconds), the set speed increases in increments of 1.6 km/h per SW operation. However, if the SW is operated when the set speed differs from the actual vehicle speed by 5 km/h or more, the set speed is not changed.
* The vehicle speed at the time the – SET SW was turned OFF is reset when the vehicle is accelerated by depressing the accelerator pedal and the – SET SW is turned ON. However, when the SW is operated at the speed higher than the high limit speed, the SW operation is not effective.

3. The Lower Limit Vehicle Speed for Setting

* It means the lower limit speed in the settable range and is set at approximately 45 km/h. It is discriminated from the low limit speed.
* A set speed is not stored in the memory when the vehicle runs at the lower limit vehicle speed for setting or slower.

4. The Low Speed Limit

It means the lower limit speed in the controllable range and is set at 40 km/h. When the vehicle speed decreases below 40 km/h while the vehicle runs under cruise control, cruise control is automatically canceled.
Vehicle–to–vehicle distance control mode and constant speed control mode store the set speed in the memory at this time.

5. The Higher Limit Vehicle Speed for Laser Cruise Control Setting

It means the higher limit speed in the radar cruise control settable range and is set at approximately 135 km/h.

6. The High Speed Limit (Only in Constant Speed Control Mode)

It means the higher limit speed in constant speed control mode under cruise control and is set at approximately 200 km/h.

7. Resume

* If cruise control is canceled at the vehicle speed higher than the low speed limit, turning ON the + RES SW accelerates the vehicle to the set speed at the time cruise control is canceled.
* Under the follow–up control, when the driver or vehicle ahead changes lanes and the road ahead is clear, the vehicle accelerates automatically and gradually to a set speed. When the + RES SW is turned ON at this time, the vehicle speed can increase promptly (Only in vehicle–to–vehicle distance control mode).

8. Shift–Down Control

When the vehicle climbs a hill while running under cruise control, the gear may be shifted down by the A/T control. When the hill climb is judged to have finished, based on the throttle opening information, the gear is shifted up after a set time.

9. Cancel

Cruise control is canceled if the following signals are input under cruise control (Set speed is not erased).

(1) Stop lamp SW ON (Brake pedal depressed)
(2) D position circuit in park/neutral position SW from ON to OFF
  * Gear is shifted from D or 4 position to other positions than D or 4.
(3) CANCEL SW of CONTROL SW ON
(4) ON–OFF SW OFF (Set speed erased)
(5) During VSC operation

○ : **Parts Location**

Code	See Page	Code	See Page	Code	See Page
A9 A	38	H15	42	J41	43
A15	38	J2	37	J42	43
A21 B	38	J3 A	40	J47	40
B7 B	38	J4 B	40	J48	40
C10	39	J5 A	40	J49	40
C12	39	J6 B	40	L1	37
C13	39	J7 A	40	P1	37
D1	39	J8 B	40	R19	45
D2	39	J15	40	R21	45
E1	36	J17	40	S3 A	37
E4 A	39	J18	40	S9	41
E5 B	39	J19	40	S12	41
E9 C	39	J20	40	S34 A	41
E10 D	39	J21	40	S35 B	41
E11 E	39	J28	40	T2	37
F6 A	36	J31 A	40	V6	41
F10 E	36	J32 B	40	Y1	45
F12 G	36	J37	43		
G4	39	J38	43		

: **Relay Blocks**

Code	See Page	Relay Blocks (Relay Block Location)
5	27	R/B No.5 (Engine Compartment Left)
6	28	R/B No.6 (Engine Compartment Left)

: **Junction Block and Wire Harness Connector**

Code	See Page	Junction Block and Wire Harness (Connector Location)
1C	31	Engine Room Main Wire and Driver Side J/B (Lower Finish Panel)
1E	31	Instrument Panel Wire and Driver Side J/B (Lower Finish Panel)
1H	30	
1K	31	
1L		
1P	31	Floor No.1 Wire and Driver Side J/B (Lower Finish Panel)
2C	24	Engine Room Main Wire and Engine Room J/B (Engine Compartment Left)
2F		
2H		

: **Connector Joining Wire Harness and Wire Harness**

Code	See Page	Joining Wire Harness and Wire Harness (Connector Location)
II3	53	Engine Wire and Instrument Panel Wire (Right Kick Panel)
IK1	53	Engine Room Main Wire and Instrument Panel Wire (Right Kick Panel)
BG1	55	Back Door No.1 Wire and Floor No.1 Wire (Left Rear Quarter Panel)

: **Ground Points**

Code	See Page	Ground Points Location
EB	50	Rear Bank of Right Cylinder Head
EC	50	Rear Bank of Left Cylinder Head
ED	50	Front Side of the Left Fender Apron
IF	52	Instrument Panel Brace LH
IG	52	Right Kick Panel
BL	54	Right Rear Quarter Panel
BM	54	Left Rear Quarter Panel
BN	54	Left Side of the Back Door