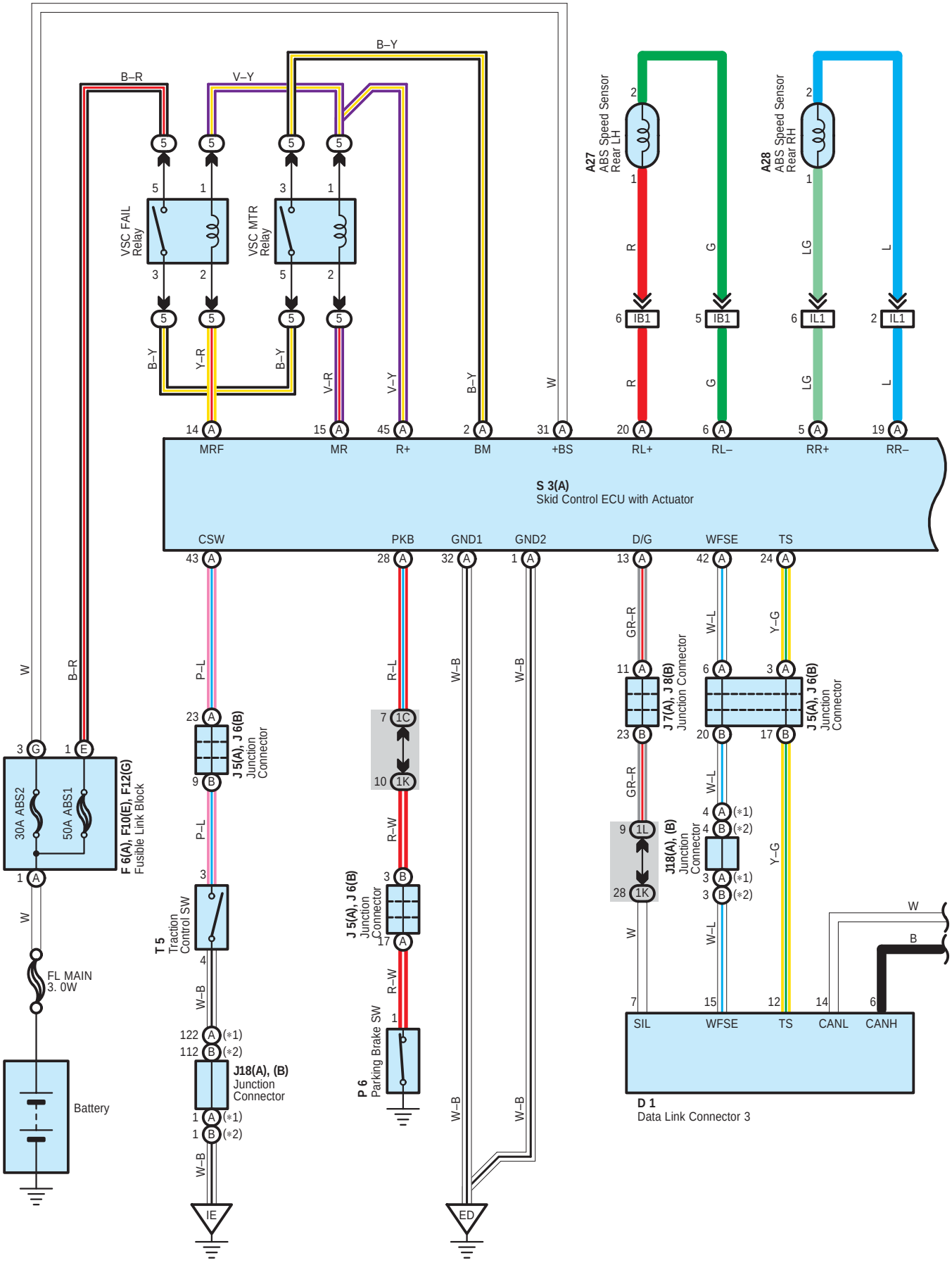
B–Y
B–R
V–Y
VSC FAIL Relay
VSC MTR Relay
A27 ABS Speed Sensor Rear LH
A28 ABS Speed Sensor Rear RH
MRF
MR
R+
BM
+BS
RL+
RL–
RR+
RR–
S 3(A) Skid Control ECU with Actuator
CSW
PKB
GND1
GND2
D/G
WFSE
TS
F 6(A), F10(E), F12(G) Fusible Link Block
30A ABS2
50A ABS1
FL MAIN 3. 0W
Battery
T 5 Traction Control SW
J 5(A), J 6(B) Junction Connector
J 7(A), J 8(B) Junction Connector
J18(A), (B) Junction Connector
P 6 Parking Brake SW
D 1 Data Link Connector 3
SIL
CANL
CANH
IE
ED

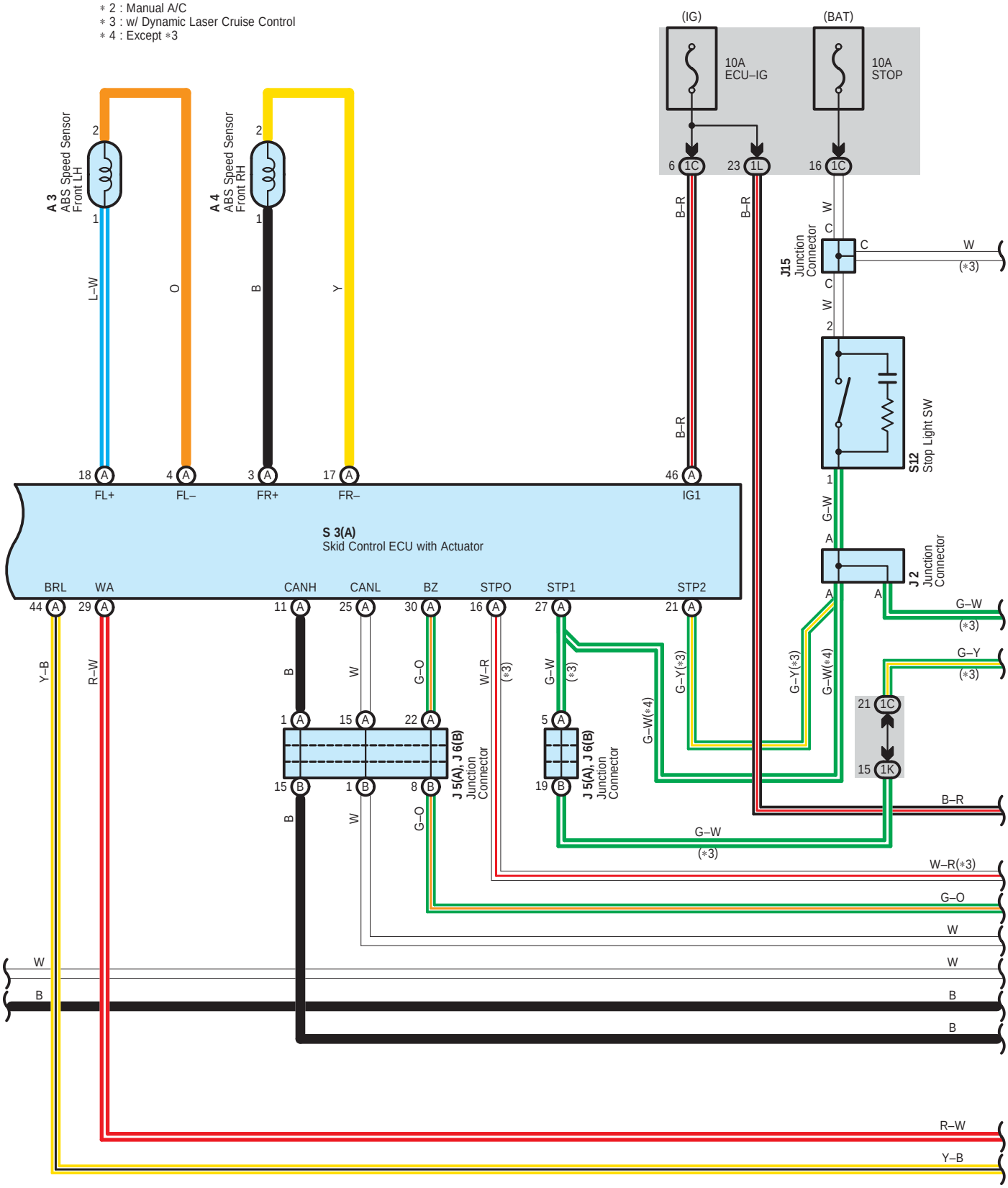

∗ 1 : Automatic A/C
∗ 2 : Manual A/C
∗ 3 : w/ Dynamic Laser Cruise Control
∗ 4 : Except ∗3
(IG)
(BAT)
10A ECU–IG
10A STOP
A 3 ABS Speed Sensor Front LH
A 4 ABS Speed Sensor Front RH
J15 Junction Connector
S12 Stop Light SW
J 2 Junction Connector
S 3(A) Skid Control ECU with Actuator
FL+
FL–
FR+
FR–
IG1
BRL
WA
CANH
CANL
BZ
STPO
STP1
STP2
J 5(A), J 6(B) Junction Connector
L–W
O
B
Y
B–R
G–W
G–Y
G–O
W–R
W–R(∗3)
Y–B
R–W
(∗3)
G–Y(∗3)
G–W(∗4)

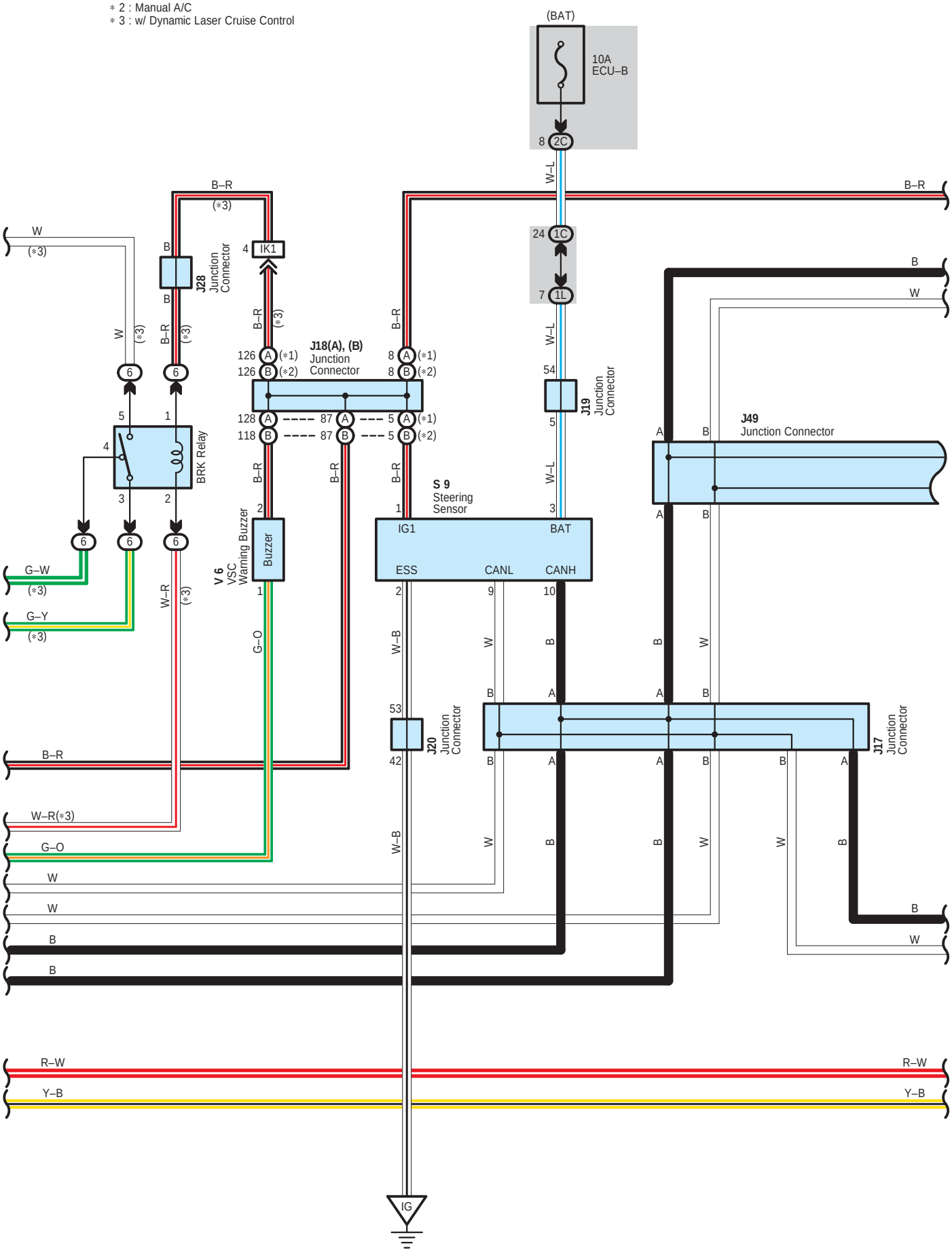
∗ 1 : Automatic A/C
∗ 2 : Manual A/C
∗ 3 : w/ Dynamic Laser Cruise Control
(BAT)
10A
ECU–B
8 2C
W–L
B–R
24 1C
7 1L
W
(∗3)
B
J28
Junction
Connector
4 IK1
B–R
(∗3)
J18(A), (B)
Junction
Connector
126 A (∗1)
126 B (∗2)
8 A (∗1)
8 B (∗2)
54
J19
Junction
Connector
5
128 A
118 B
87
5 A (∗1)
5 B (∗2)
J49
Junction Connector
BRK Relay
S 9
Steering
Sensor
IG1
BAT
ESS
CANL
CANH
V 6
VSC
Warning Buzzer
Buzzer
G–W
G–Y
W–R
G–O
W–B
53
J20
Junction
Connector
42
J17
Junction
Connector
W–R(∗3)
R–W
Y–B
IG

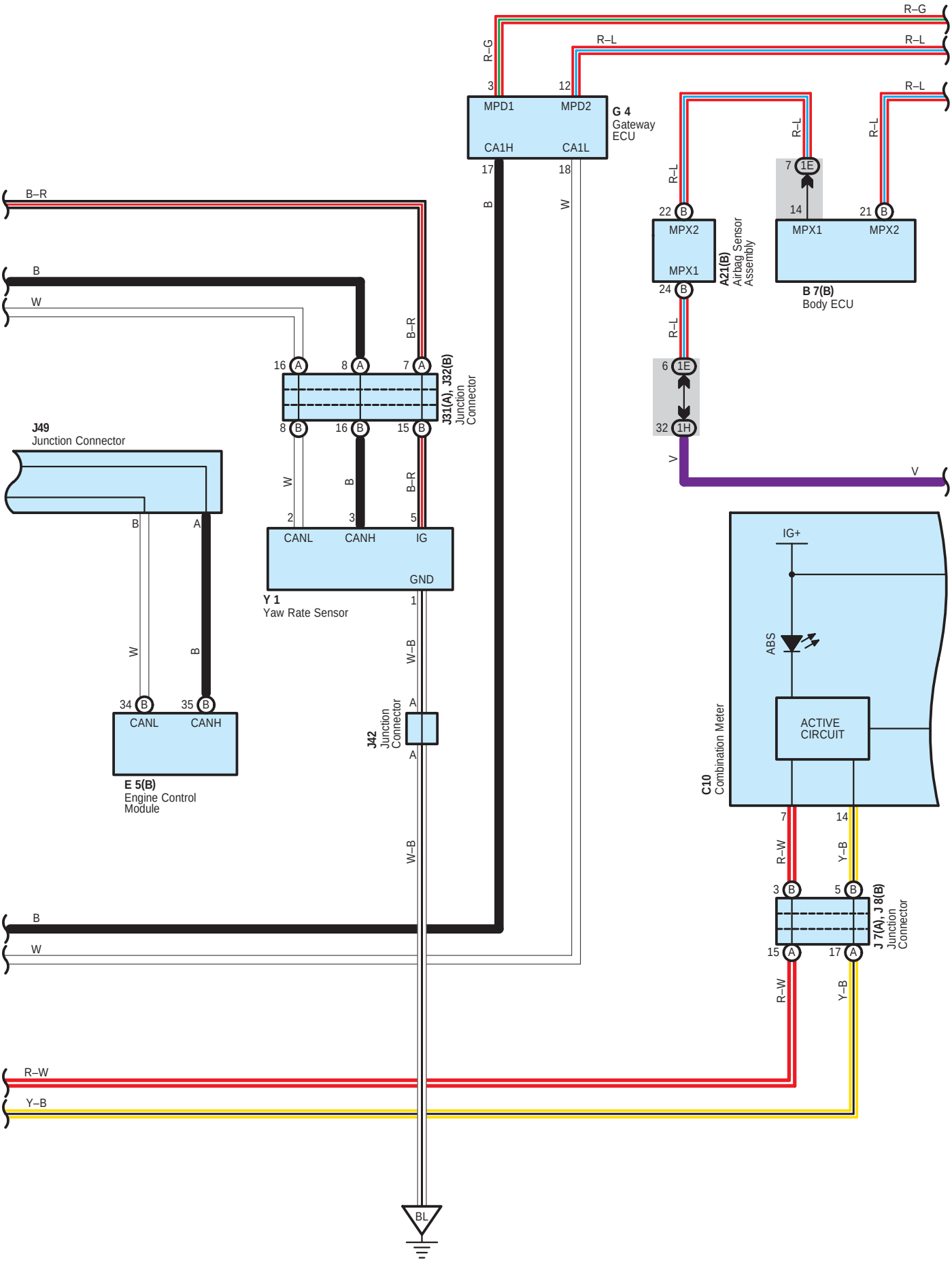
R–G
R–L
R–L
3
12
MPD1
MPD2
CA1H
CA1L
G 4
Gateway ECU
17
18
B
W
R–L
R–L
R–L
22 B
MPX2
MPX1
A21(B)
Airbag Sensor Assembly
24 B
7 1E
14
21 B
MPX1
MPX2
B 7(B)
Body ECU
R–L
6 1E
32 1H
V
V
B–R
B
W
16 A
8 A
7 A
J31(A), J32(B)
Junction Connector
8 B
16 B
15 B
J49
Junction Connector
B
A
W
B
B–R
2
3
5
CANL
CANH
IG
GND
Y 1
Yaw Rate Sensor
1
W–B
A
J42
Junction Connector
A
W
B
34 B
35 B
CANL
CANH
E 5(B)
Engine Control Module
W–B
IG+
ABS
ACTIVE CIRCUIT
C10
Combination Meter
7
14
R–W
Y–B
3 B
5 B
15 A
17 A
J 7(A), J 8(B)
Junction Connector
R–W
Y–B
B
W
R–W
Y–B
BL

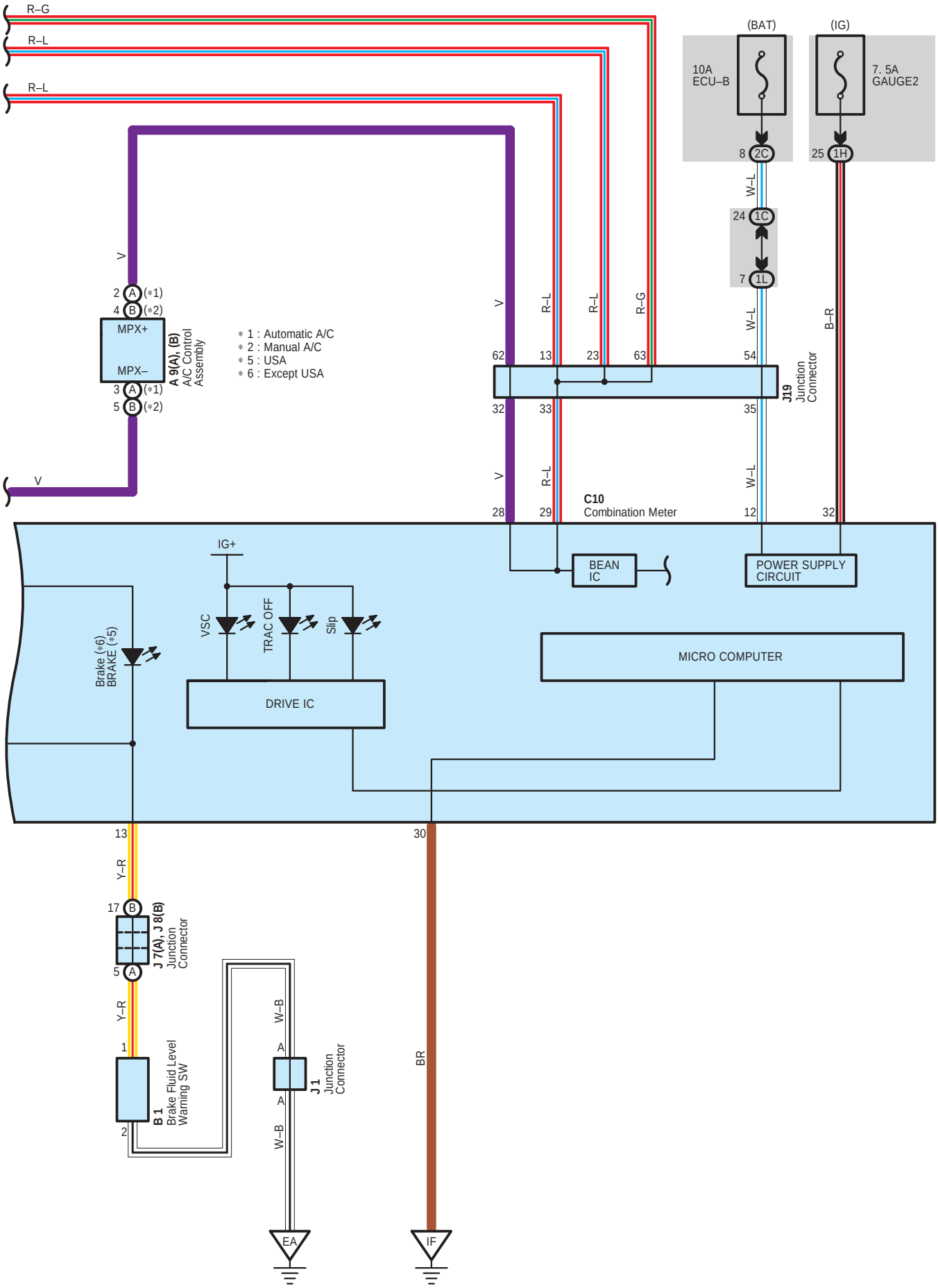
R–G
R–L
R–L
(BAT)
(IG)
10A
ECU–B
7. 5A
GAUGE2
8 2C
25 1H
W–L
24 1C
7 1L
V
2 A (*1)
4 B (*2)
MPX+
MPX–
3 A (*1)
5 B (*2)
A 9(A), (B)
A/C Control
Assembly
* 1 : Automatic A/C
* 2 : Manual A/C
* 5 : USA
* 6 : Except USA
V
R–L
R–L
R–G
62
13
23
63
54
B–R
J19
Junction
Connector
32
33
35
V
R–L
W–L
28
29
12
32
C10
Combination Meter
IG+
BEAN
IC
POWER SUPPLY
CIRCUIT
VSC
TRAC OFF
Slip
Brake (*6)
BRAKE (*5)
MICRO COMPUTER
DRIVE IC
13
30
Y–R
17 B
J 7(A), J 8(B)
Junction
Connector
5 A
Y–R
W–B
1
A
B 1
Brake Fluid Level
Warning SW
2
A
J 1
Junction
Connector
W–B
BR
EA
IF

System Outline

The vehicle could be in an extreme over steering or under steering tendency due to unexpected accidents, road conditions, vehicle speed, or by other external factors. In such a case, this system automatically controls the engine output and the braking to each wheel, to decrease the extreme over steering and under steering.

∗ To decrease extreme over steering tendency

When the system determines that the over steering tendency is large, the system applies brakes to the outer wheels according to the degree of over steering, and creates a moment towards the outer side of the vehicle, to decrease the tendency of over steering. Also, when the brakes are applied, the vehicle speed decreases while the stability increases.

∗ To decrease extreme under steering tendency

When the system determines that the under steering tendency is large, the system applies brakes to the front or rear wheels according to the degree of under steering, to decrease the tendency of under steering.

∗ Traction control SW

Traction control SW is only for two–wheel drive models. Four–wheel drive models is needless this SW.

The SW to send the traction control system into OFF mode. When the SW is pushed after starting the engine, the system will be in OFF mode, and the traction control SW indicator light will turn on. When the SW is pushed again, the system will be in standby mode. When the engine is stopped and re–started, regardless of the traction control SW, the system will be in standby mode.

Information to the driver

The VSC system informs the driver when the tire grip is about to exceed its grip capacity, by blinking the slip indicator light and emiting an intermittent sound of the buzzer. Accordingly, the driver is informed to drive more gently.

: Parts Location

Code	See Page	Code	See Page	Code	See Page
A3	36	F12 G	36	J28	40
A4	36	G4	39	J31 A	40
A9 A	38	J1	37	J32 B	40
A9 B	38	J2	37	J42	43
A21 B	38	J5 A	40	J49	40
A27	42	J6 B	40	P6	41
A28	42	J7 A	40	S3 A	37
B1	36	J8 B	40	S9	41
B7 B	38	J15	40	S12	41
C10	39	J17	40	T5	41
D1	39	J18 A	40	V6	41
E5 B	39	J18 B	40	Y1	45
F6 A	36	J19	40		
F10 E	36	J20	40		

: Relay Blocks

Code	See Page	Relay Blocks (Relay Block Location)
5	27	R/B No.5 (Engine Compartment Left)
6	28	R/B No.6 (Engine Compartment Left)

: Junction Block and Wire Harness Connector

Code	See Page	Junction Block and Wire Harness (Connector Location)
1C	31	Engine Room Main Wire and Driver Side J/B (Lower Finish Panel)
1E	31	Instrument Panel Wire and Driver Side J/B (Lower Finish Panel)
1H	30	
1K	31	
1L		
2C	24	Engine Room Main Wire and Engine Room J/B (Engine Compartment Left)

: Connector Joining Wire Harness and Wire Harness

Code	See Page	Joining Wire Harness and Wire Harness (Connector Location)
IB1	52	Engine Room Main Wire and Floor No.1 Wire (Left Cowl Side Panel)
IK1	53	Engine Room Main Wire and Instrument Panel Wire (Right Kick Panel)
IL1	53	Engine Room Main Wire and Floor No.2 Wire (Right Kick Panel)

: Ground Points

Code	See Page	Ground Points Location
EA	50	Front Side of the Right Fender Apron
ED	50	Front Side of the Left Fender Apron
IE	52	Left Kick Panel
IF	52	Instrument Panel Brace LH
IG	52	Right Kick Panel
BL	54	Right Rear Quarter Panel