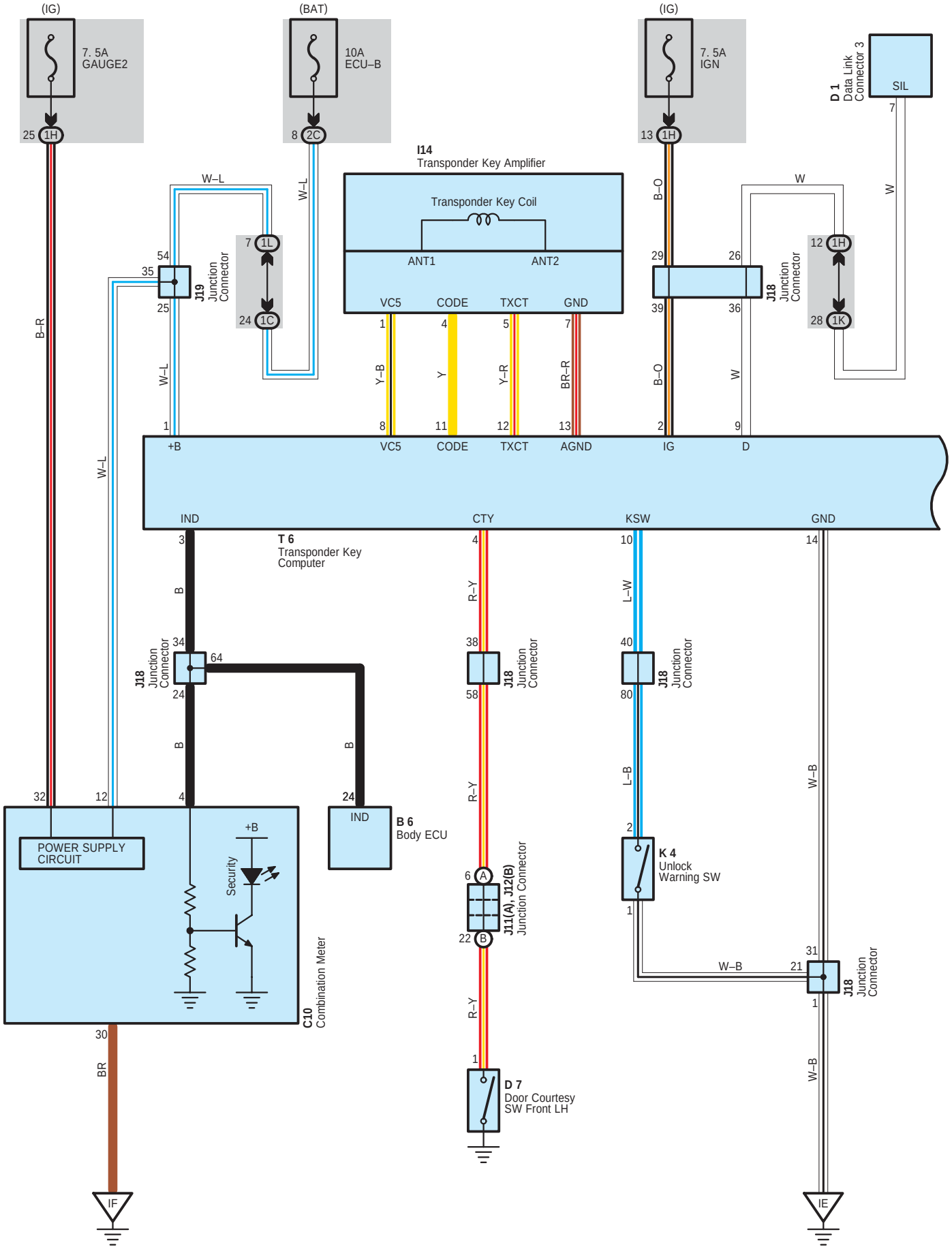
(IG)
7. 5A
GAUGE2
(BAT)
10A
ECU–B
(IG)
7. 5A
IGN
D 1
Data Link
Connector 3
SIL
I14
Transponder Key Amplifier
Transponder Key Coil
ANT1
ANT2
VC5
CODE
TXCT
GND
J19
Junction
Connector
J18
Junction
Connector
+B
VC5
CODE
TXCT
AGND
IG
D
IND
CTY
KSW
GND
T 6
Transponder Key
Computer
J18
Junction
Connector
POWER SUPPLY
CIRCUIT
Security
C10
Combination Meter
B 6
Body ECU
J11(A), J12(B)
Junction Connector
K 4
Unlock
Warning SW
D 7
Door Courtesy
SW Front LH
IF
IE

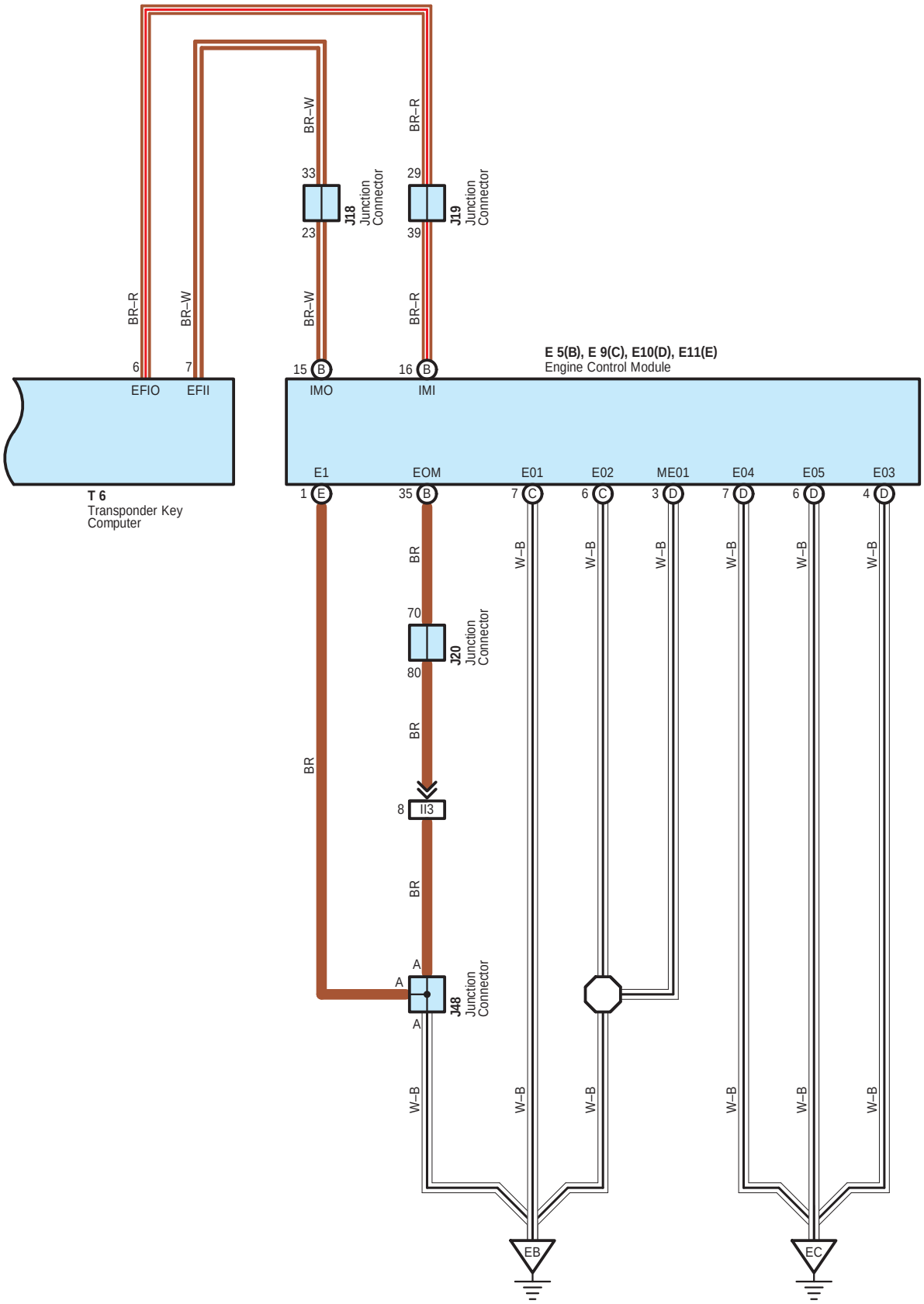
BR–R
BR–W
BR–W
BR–R
33
23
29
39
J18
Junction
Connector
J19
Junction
Connector
6
7
15
16
B
B
EFIO
EFII
IMO
IMI
E 5(B), E 9(C), E10(D), E11(E)
Engine Control Module
E1
EOM
E01
E02
ME01
E04
E05
E03
1
35
7
6
3
7
6
4
E
B
C
C
D
D
D
D
T 6
Transponder Key
Computer
BR
W–B
70
80
J20
Junction
Connector
8
II3
A
A
J48
Junction
Connector
EB
EC

Engine Immobiliser System

: Parts Location

Code		See Page	Code		See Page	Code	See Page
B6		38	E9	C	39	J18	40
C10		39	E10	D	39	J19	40
D1		39	E11	E	39	J20	40
D7		42	I14		39	J48	40
E4	A	39	J11	A	40	K4	40
E5	B	39	J12	B	40	T6	41

: Junction Block and Wire Harness Connector

Code	See Page	Junction Block and Wire Harness (Connector Location)
1C	31	Engine Room Main Wire and Driver Side J/B (Lower Finish Panel)
1H	30	Instrument Panel Wire and Driver Side J/B (Lower Finish Panel)
1K	31	
1L		
2C	24	Engine Room Main Wire and Engine Room J/B (Engine Compartment Left)

: Connector Joining Wire Harness and Wire Harness

Code	See Page	Joining Wire Harness and Wire Harness (Connector Location)
II3	53	Engine Wire and Instrument Panel Wire (Right Kick Panel)

: Ground Points

Code	See Page	Ground Points Location
EB	50	Rear Bank of Right Cylinder Head
EC	50	Rear Bank of Left Cylinder Head
IE	52	Left Kick Panel
IF	52	Instrument Panel Brace LH