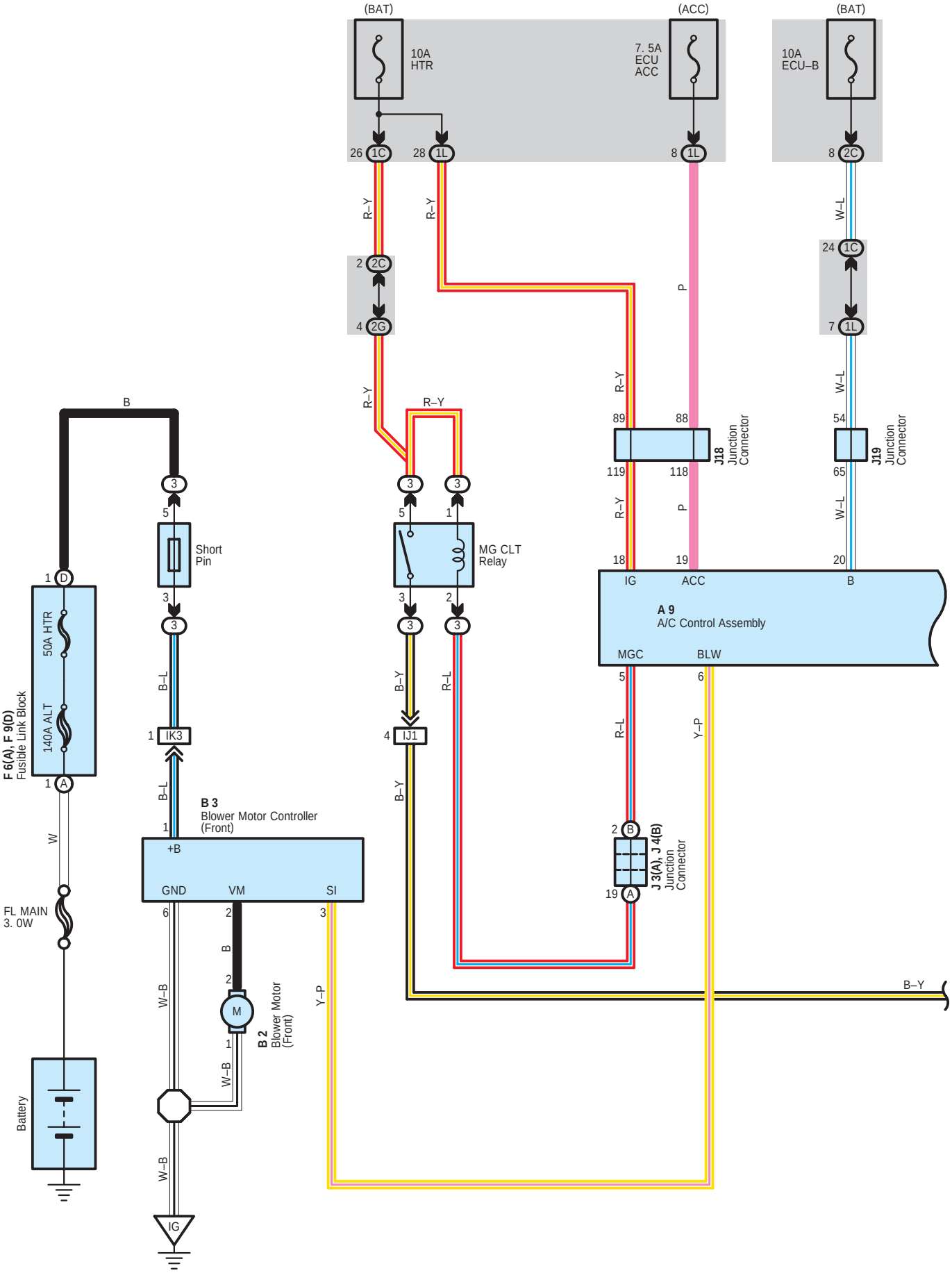
(BAT)
10A
HTR
(ACC)
7. 5A
ECU
ACC
(BAT)
10A
ECU–B
26 1C
28 1L
8 1L
8 2C
R–Y
R–Y
W–L
2 2C
4 2G
24 1C
7 1L
P
R–Y
R–Y
W–L
89
88
J18
Junction
Connector
54
J19
Junction
Connector
119
118
65
R–Y
P
W–L
18
19
20
IG
ACC
B
A 9
A/C Control Assembly
MGC
BLW
5
6
R–L
Y–P
B
3
5
Short
Pin
3
3
5
1
MG CLT
Relay
3
2
3
3
B–Y
R–L
4 IJ1
B–Y
1 D
50A HTR
140A ALT
F 6(A), F 9(D)
Fusible Link Block
1 A
B–L
1 IK3
B–L
B 3
Blower Motor Controller
(Front)
1
+B
GND
VM
SI
6
2
3
W
FL MAIN
3. 0W
B
2
M
B 2
Blower Motor
(Front)
1
W–B
W–B
Y–P
2 B
J 3(A), J 4(B)
Junction
Connector
19 A
B–Y
Battery
W–B
IG

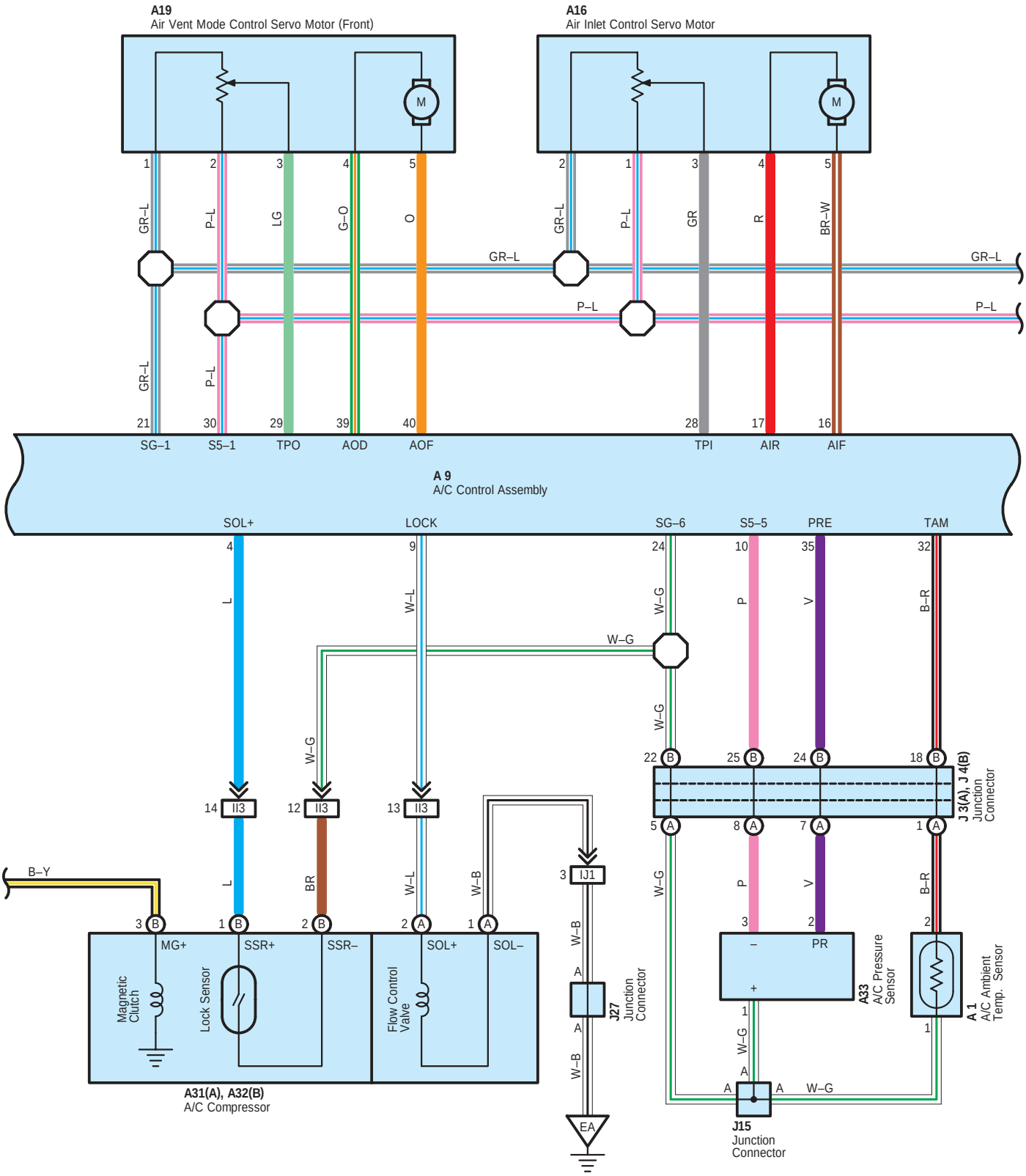
A19
Air Vent Mode Control Servo Motor (Front)
A16
Air Inlet Control Servo Motor
M
GR–L
P–L
LG
G–O
O
BR–W
R
GR
SG–1
S5–1
TPO
AOD
AOF
TPI
AIR
AIF
A 9
A/C Control Assembly
SOL+
LOCK
SG–6
S5–5
PRE
TAM
W–L
W–G
B–R
J 3(A), J 4(B)
Junction Connector
B–Y
BR
W–B
II3
IJ1
MG+
SSR+
SSR–
SOL+
SOL–
Magnetic Clutch
Lock Sensor
Flow Control Valve
J27
Junction Connector
A31(A), A32(B)
A/C Compressor
PR
A33
A/C Pressure Sensor
A 1
A/C Ambient Temp. Sensor
EA
J15
Junction Connector

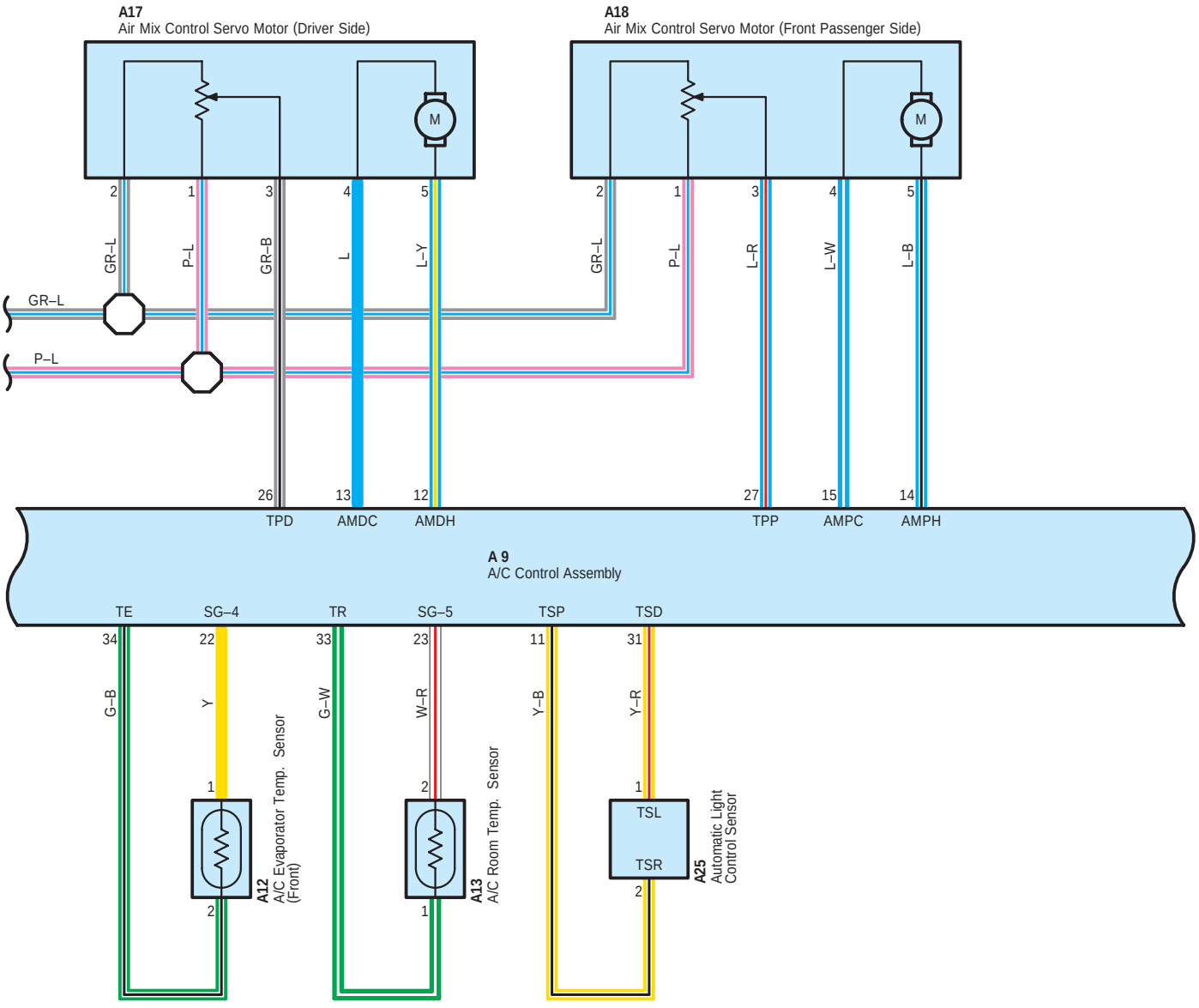
A17
Air Mix Control Servo Motor (Driver Side)
A18
Air Mix Control Servo Motor (Front Passenger Side)
M
M
2
1
3
4
5
GR–L
P–L
GR–B
L
L–Y
GR–L
P–L
L–R
L–W
L–B
GR–L
P–L
26
13
12
27
15
14
TPD
AMDC
AMDH
TPP
AMPC
AMPH
A 9
A/C Control Assembly
TE
SG–4
TR
SG–5
TSP
TSD
34
22
33
23
11
31
G–B
Y
G–W
W–R
Y–B
Y–R
1
2
1
2
1
2
A12
A/C Evaporator Temp. Sensor (Front)
A13
A/C Room Temp. Sensor
TSL
TSR
A25
Automatic Light Control Sensor

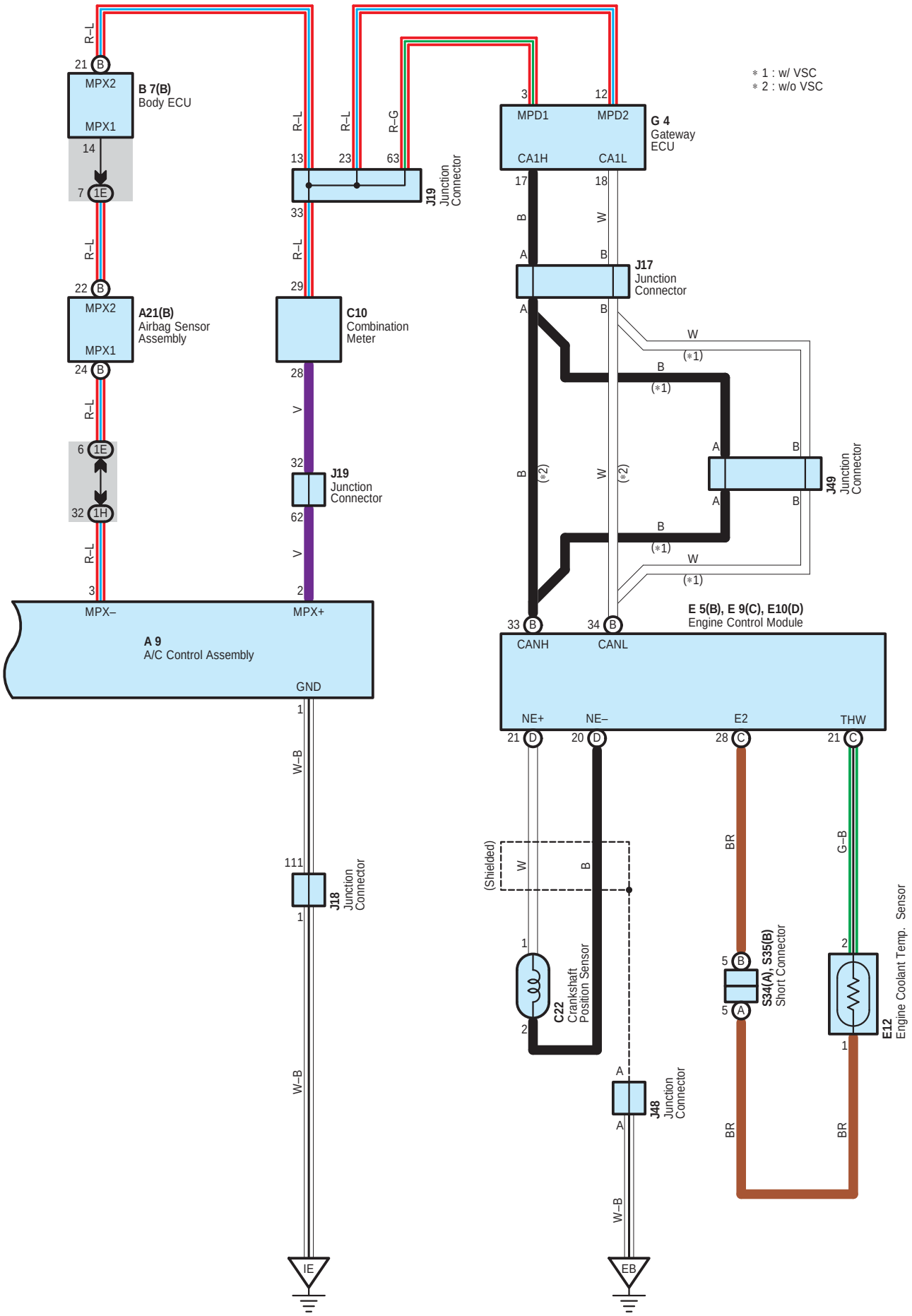
∗ 1 : w/ VSC
∗ 2 : w/o VSC
B 7(B)
Body ECU
MPX2
MPX1
A21(B)
Airbag Sensor
Assembly
C10
Combination
Meter
J19
Junction
Connector
G 4
Gateway
ECU
MPD1
MPD2
CA1H
CA1L
J17
Junction
Connector
J49
Junction
Connector
E 5(B), E 9(C), E10(D)
Engine Control Module
CANH
CANL
A 9
A/C Control Assembly
MPX–
MPX+
GND
NE+
NE–
E2
THW
J18
Junction
Connector
J48
Junction
Connector
C22
Crankshaft
Position Sensor
(Shielded)
S34(A), S35(B)
Short Connector
E12
Engine Coolant Temp. Sensor
IE
EB

Automatic Air Conditioning (Front)

: Parts Location

Code	See Page	Code	See Page	Code	See Page
A1	36	A33	36	G4	39
A9	38	B2	38	J3 A	40
A12	38	B3	38	J4 B	40
A13	38	B7 B	38	J15	40
A16	38	C10	39	J17	40
A17	38	C22	36	J18	40
A18	38	E5 B	39	J19	40
A19	38	E9 C	39	J27	40
A21 B	38	E10 D	39	J48	40
A25	38	E12	36	J49	40
A31 A	36	F6 A	36	S34 A	41
A32 B	36	F9 D	36	S35 B	41

: Relay Blocks

Code	See Page	Relay Blocks (Relay Block Location)
3	26	R/B No.3 (Engine Compartment Left)

: Junction Block and Wire Harness Connector

Code	See Page	Junction Block and Wire Harness (Connector Location)
1C	31	Engine Room Main Wire and Driver Side J/B (Lower Finish Panel)
1E	31	Instrument Panel Wire and Driver Side J/B (Lower Finish Panel)
1H	30	
1L	31	
2C	24	Engine Room Main Wire and Engine Room J/B (Engine Compartment Left)
2G		

: Connector Joining Wire Harness and Wire Harness

Code	See Page	Joining Wire Harness and Wire Harness (Connector Location)
II3	53	Engine Wire and Instrument Panel Wire (Right Kick Panel)
IJ1	53	Engine Wire and Engine Room Main Wire (Right Kick Panel)
IK3	53	Engine Room Main Wire and Instrument Panel Wire (Right Kick Panel)

: Ground Points

Code	See Page	Ground Points Location
EA	50	Front Side of the Right Fender Apron
EB	50	Rear Bank of Right Cylinder Head
IE	52	Left Kick Panel
IG	52	Right Kick Panel