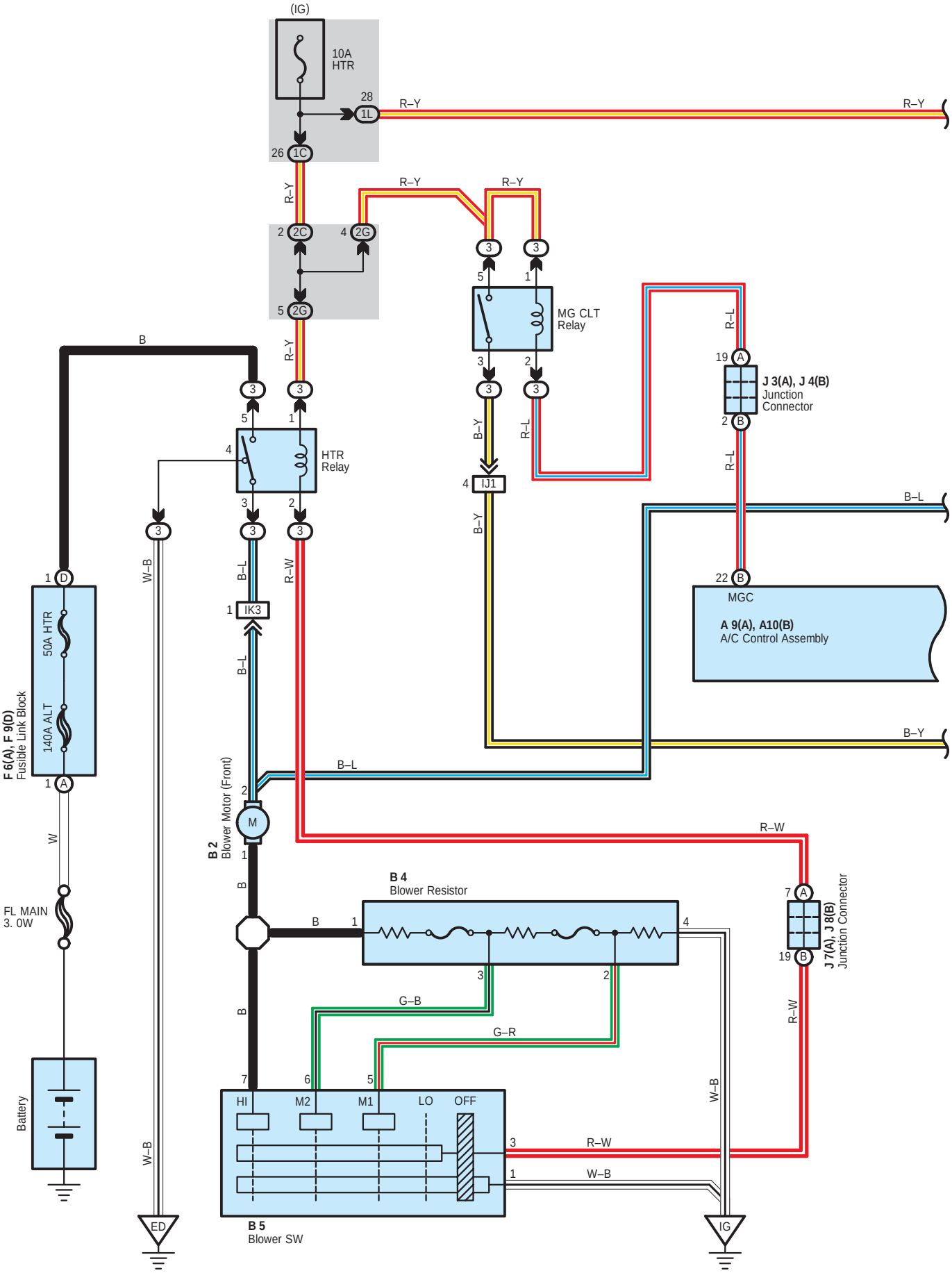
(IG)
10A
HTR
28
1L
R–Y
R–Y
26
1C
R–Y
R–Y
R–Y
2
2C
4
2G
5
2G
3
3
5
1
MG CLT
Relay
3
2
3
3
B–Y
R–L
4
IJ1
B–Y
R–L
19
A
J 3(A), J 4(B)
Junction
Connector
2
B
R–L
B–L
22
B
MGC
A 9(A), A10(B)
A/C Control Assembly
B–Y
B
3
3
5
1
4
HTR
Relay
3
2
3
3
W–B
B–L
R–W
1
IK3
B–L
1
D
50A HTR
140A ALT
F 6(A), F 9(D)
Fusible Link Block
1
A
W
FL MAIN
3. 0W
Battery
W–B
ED
B–L
2
M
B 2
Blower Motor (Front)
1
B
B
1
B 4
Blower Resistor
4
3
2
R–W
7
A
19
B
J 7(A), J 8(B)
Junction Connector
R–W
G–B
G–R
7
6
5
HI
M2
M1
LO
OFF
W–B
3
R–W
1
W–B
B 5
Blower SW
IG

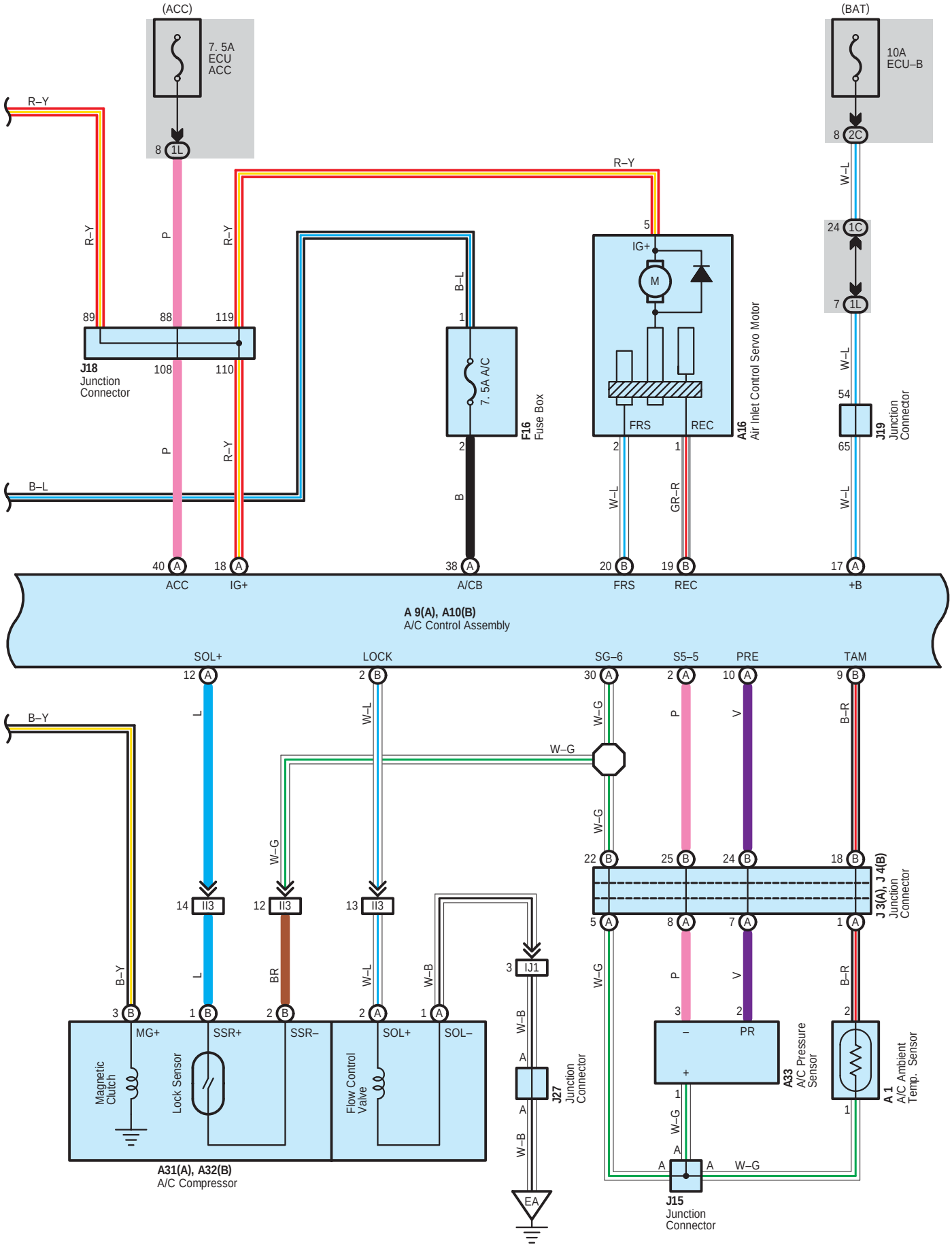
(ACC)
7. 5A
ECU
ACC
(BAT)
10A
ECU–B
R–Y
B–L
P
W–L
GR–R
B–R
B–Y
W–G
W–B
L
BR
J18
Junction
Connector
F16
Fuse Box
7. 5A A/C
A16
Air Inlet Control Servo Motor
J19
Junction
Connector
A 9(A), A10(B)
A/C Control Assembly
ACC
IG+
A/CB
FRS
REC
+B
SOL+
LOCK
SG–6
S5–5
PRE
TAM
J 3(A), J 4(B)
Junction
Connector
A31(A), A32(B)
A/C Compressor
MG+
SSR+
SSR–
SOL+
SOL–
Magnetic
Clutch
Lock Sensor
Flow Control
Valve
J27
Junction
Connector
EA
A33
A/C Pressure
Sensor
PR
A 1
A/C Ambient
Temp. Sensor
J15
Junction
Connector

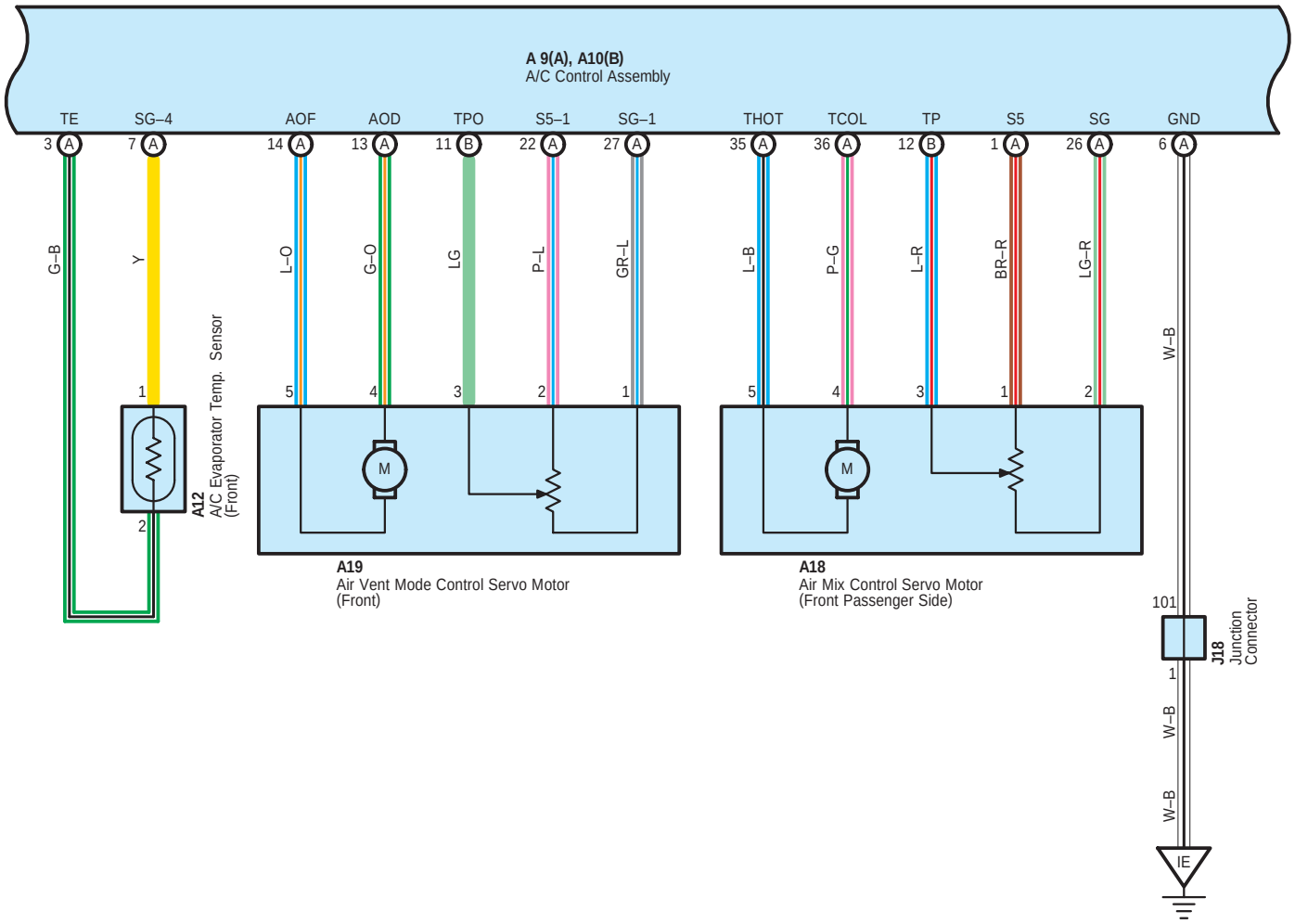
A 9(A), A10(B)
A/C Control Assembly
TE
SG–4
AOF
AOD
TPO
S5–1
SG–1
THOT
TCOL
TP
S5
SG
GND
3 A
7 A
14 A
13 A
11 B
22 A
27 A
35 A
36 A
12 B
1 A
26 A
6 A
G–B
Y
L–O
G–O
LG
P–L
GR–L
L–B
P–G
L–R
BR–R
LG–R
W–B
1
2
5
4
3
2
1
5
4
3
1
2
A12
A/C Evaporator Temp. Sensor (Front)
M
A19
Air Vent Mode Control Servo Motor (Front)
M
A18
Air Mix Control Servo Motor (Front Passenger Side)
101
J18
Junction Connector
1
W–B
W–B
IE

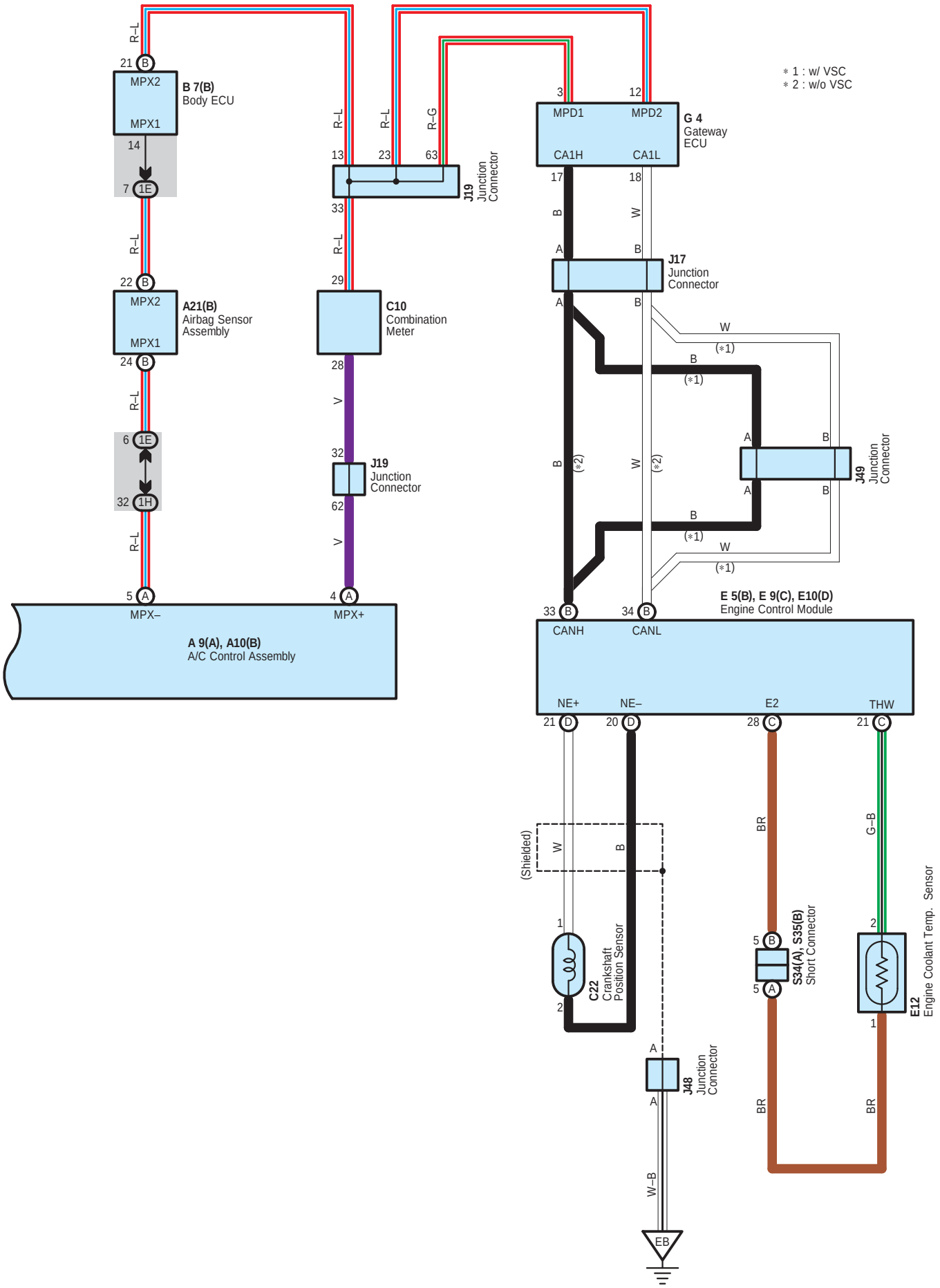
∗1 : w/ VSC
∗2 : w/o VSC
B 7(B)
Body ECU
MPX2
MPX1
A21(B)
Airbag Sensor
Assembly
C10
Combination
Meter
J19
Junction
Connector
G 4
Gateway
ECU
MPD1
MPD2
CA1H
CA1L
J17
Junction
Connector
J49
Junction
Connector
E 5(B), E 9(C), E10(D)
Engine Control Module
CANH
CANL
A 9(A), A10(B)
A/C Control Assembly
MPX–
MPX+
NE+
NE–
E2
THW
C22
Crankshaft
Position Sensor
(Shielded)
J48
Junction
Connector
S34(A), S35(B)
Short Connector
E12
Engine Coolant Temp. Sensor
EB

Manual Air Conditioning (Front)

: Parts Location

Code	See Page	Code	See Page	Code	See Page
A1	36	B5	38	J4 B	40
A9 A	38	B7 B	38	J7 A	40
A10 B	38	C10	39	J8 B	40
A12	38	C22	36	J15	40
A16	38	E5 B	39	J17	40
A18	38	E9 C	39	J18	40
A19	38	E10 D	39	J19	40
A21 B	38	E12	36	J27	40
A31 A	36	F6 A	36	J48	40
A32 B	36	F9 D	36	J49	40
A33	36	F16	39	S34 A	41
B2	38	G4	39	S35 B	41
B4	38	J3 A	40		

: Relay Blocks

Code	See Page	Relay Blocks (Relay Block Location)
3	26	R/B No.3 (Engine Compartment Left)

: Junction Block and Wire Harness Connector

Code	See Page	Junction Block and Wire Harness (Connector Location)
1C	31	Engine Room Main Wire and Driver Side J/B (Lower Finish Panel)
1E	31	Instrument Panel Wire and Driver Side J/B (Lower Finish Panel)
1H	30	
1L	31	
2C	24	Engine Room Main Wire and Engine Room J/B (Engine Compartment Left)
2G		

: Connector Joining Wire Harness and Wire Harness

Code	See Page	Joining Wire Harness and Wire Harness (Connector Location)
II3	53	Engine Wire and Instrument Panel Wire (Right Kick Panel)
IJ1	53	Engine Wire and Engine Room Main Wire (Right Kick Panel)
IK3	53	Engine Room Main Wire and Instrument Panel Wire (Right Kick Panel)

: Ground Points

Code	See Page	Ground Points Location
EA	50	Front Side of the Right Fender Apron
EB	50	Rear Bank of Right Cylinder Head
ED	50	Front Side of the Left Fender Apron
IE	52	Left Kick Panel
IG	52	Right Kick Panel