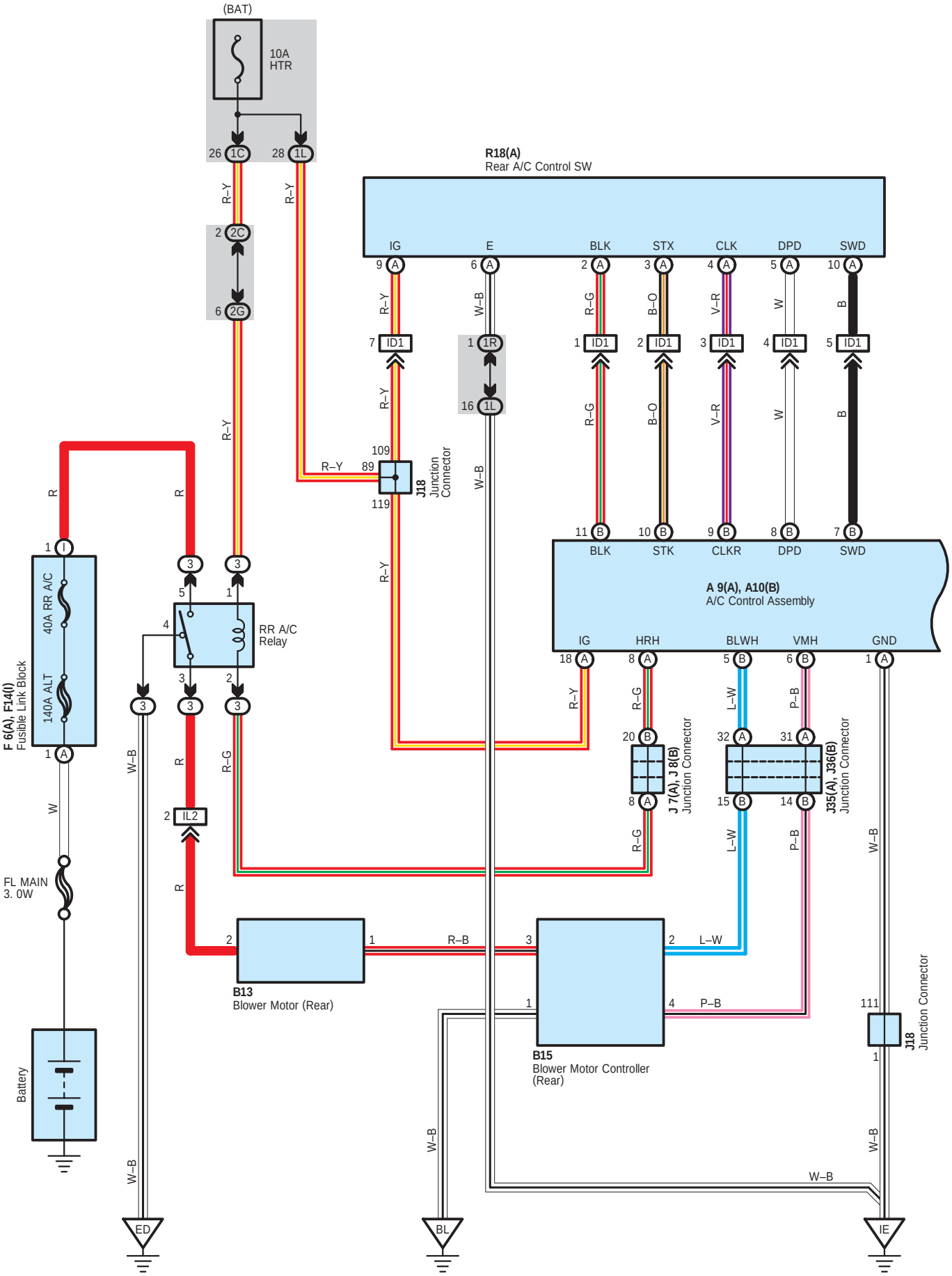
(BAT)
10A
HTR
R18(A)
Rear A/C Control SW
IG
E
BLK
STX
CLK
DPD
SWD
A 9(A), A10(B)
A/C Control Assembly
IG
HRH
BLWH
VMH
GND
J18
Junction Connector
RR A/C
Relay
40A RR A/C
140A ALT
F 6(A), F14(I)
Fusible Link Block
FL MAIN
3. 0W
Battery
J 7(A), J 8(B)
Junction Connector
J35(A), J36(B)
Junction Connector
B13
Blower Motor (Rear)
B15
Blower Motor Controller
(Rear)
J18
Junction Connector
ED
BL
IE

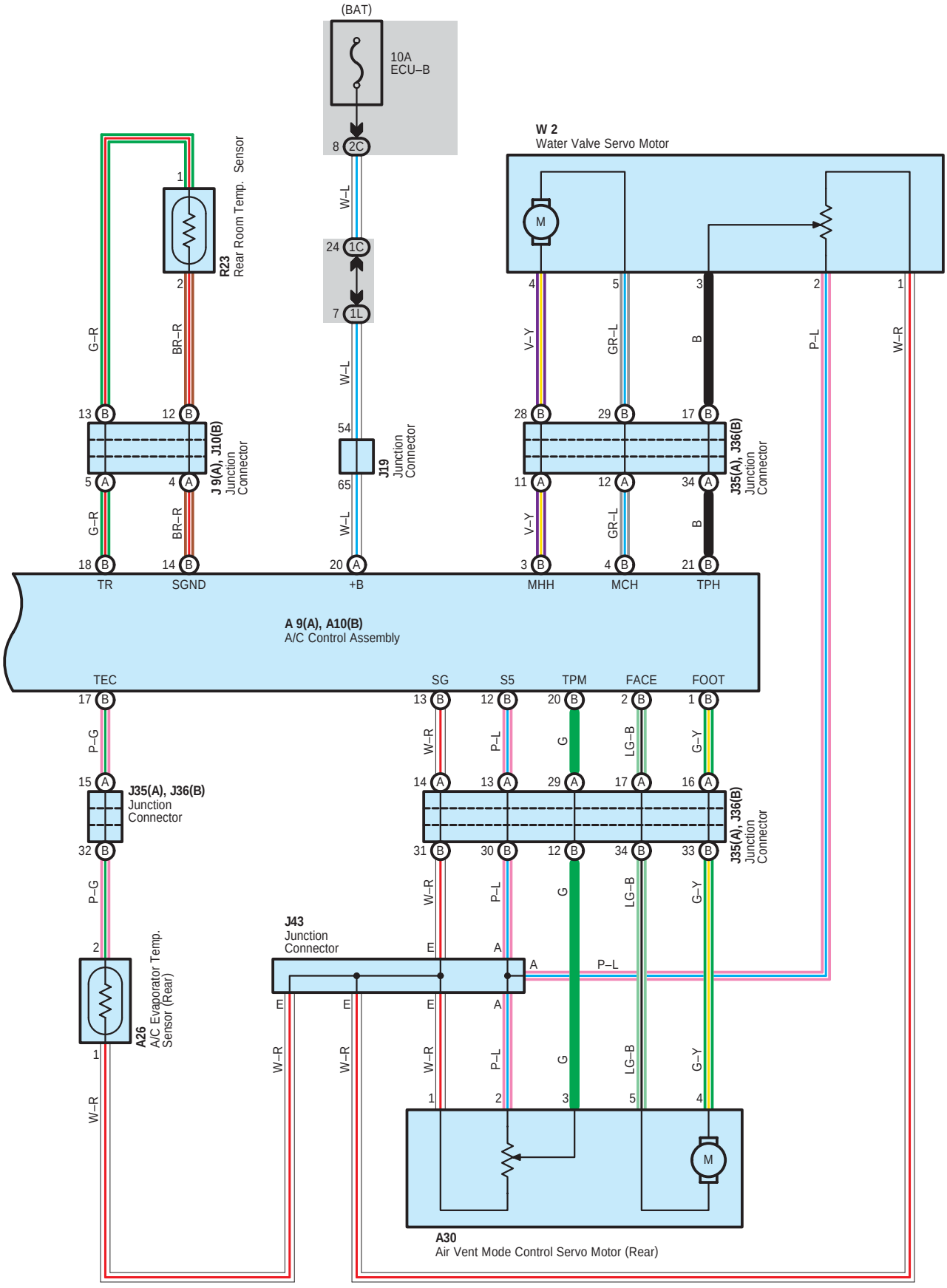
(BAT)
10A
ECU–B
8 2C
W–L
24 1C
7 1L
W–L
54
65
W–L
20 A
+B
J19
Junction
Connector
W 2
Water Valve Servo Motor
M
4 5 3 2 1
V–Y GR–L B P–L W–R
28 B 29 B 17 B
11 A 12 A 34 A
V–Y GR–L B
3 B 4 B 21 B
MHH MCH TPH
J35(A), J36(B)
Junction
Connector
R23
Rear Room Temp. Sensor
1
2
G–R BR–R
13 B 12 B
5 A 4 A
G–R BR–R
18 B 14 B
TR SGND
J 9(A), J10(B)
Junction
Connector
A 9(A), A10(B)
A/C Control Assembly
TEC SG S5 TPM FACE FOOT
17 B 13 B 12 B 20 B 2 B 1 B
P–G W–R P–L G LG–B G–Y
15 A 14 A 13 A 29 A 17 A 16 A
J35(A), J36(B)
Junction
Connector
32 B 31 B 30 B 12 B 34 B 33 B
P–G W–R P–L G LG–B G–Y
J35(A), J36(B)
Junction
Connector
J43
Junction
Connector
E A A P–L
E E E A
W–R W–R W–R P–L G LG–B G–Y
2
1
W–R
A26
A/C Evaporator Temp.
Sensor (Rear)
1 2 3 5 4
M
A30
Air Vent Mode Control Servo Motor (Rear)

Automatic Air Conditioning (Rear)

: Parts Location

Code	See Page	Code	See Page	Code	See Page
A9 A	38	F14 I	36	J35 A	40
A10 B	38	J7 A	40	J36 B	40
A26	42	J8 B	40	J43	43
A30	42	J9 A	40	R18 A	45
B13	42	J10 B	40	R23	45
B15	42	J18	40	W2	45
F6 A	36	J19	40		

: Relay Blocks

Code	See Page	Relay Blocks (Relay Block Location)
3	26	R/B No.3 (Engine Compartment Left)

: Junction Block and Wire Harness Connector

Code	See Page	Junction Block and Wire Harness (Connector Location)
1C	31	Engine Room Main Wire and Driver Side J/B (Lower Finish Panel)
1L	31	Instrument Panel Wire and Driver Side J/B (Lower Finish Panel)
1R	31	Roof Wire and Driver Side J/B (Lower Finish Panel)
2C	24	Engine Room Main Wire and Engine Room J/B (Engine Compartment Left)
2G		

: Connector Joining Wire Harness and Wire Harness

Code	See Page	Joining Wire Harness and Wire Harness (Connector Location)
ID1	52	Roof Wire and Instrument Panel Wire (Near the Driver Side J/B)
IL2	53	Engine Room Main Wire and Floor No.2 Wire (Right Kick Panel)

: Ground Points

Code	See Page	Ground Points Location
ED	50	Front Side of the Left Fender Apron
IE	52	Left Kick Panel
BL	54	Right Rear Quarter Panel