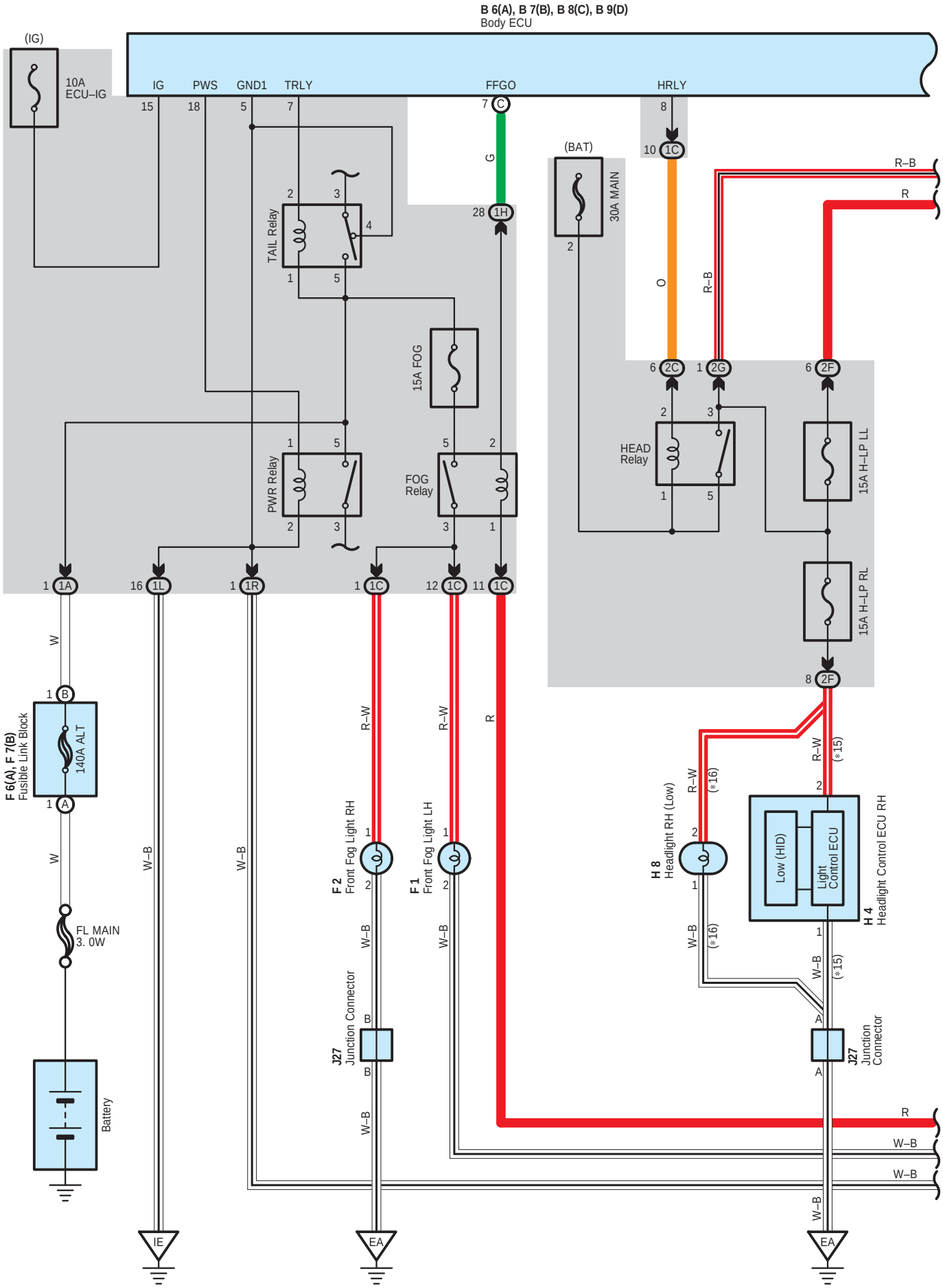
B 6(A), B 7(B), B 8(C), B 9(D)
Body ECU
(IG)
10A
ECU–IG
IG
PWS
GND1
TRLY
FFGO
HRLY
15
18
5
7
7 C
8
10 1C
G
28 1H
(BAT)
30A MAIN
2
O
R–B
R
TAIL Relay
2
3
4
1
5
15A FOG
PWR Relay
FOG Relay
HEAD Relay
6 2C
1 2G
6 2F
15A H–LP LL
15A H–LP RL
8 2F
1 1A
16 1L
1 1R
1 1C
12 1C
11 1C
W
R–W
R
W–B
F 6(A), F 7(B)
Fusible Link Block
140A ALT
1 B
1 A
FL MAIN
3. 0W
Battery
F 2
Front Fog Light RH
F 1
Front Fog Light LH
J27
Junction Connector
H 8
Headlight RH (Low)
H 4
Headlight Control ECU RH
Low (HID)
Light
Control ECU
(*15)
(*16)
IE
EA

B 6(A), B 7(B), B 8(C), B 9(D)
Body ECU

∗ 1 : w/ Daytime Running Light
∗ 2 : w/o Daytime Running Light
∗15 : HID Type
∗16 : Except HID Type

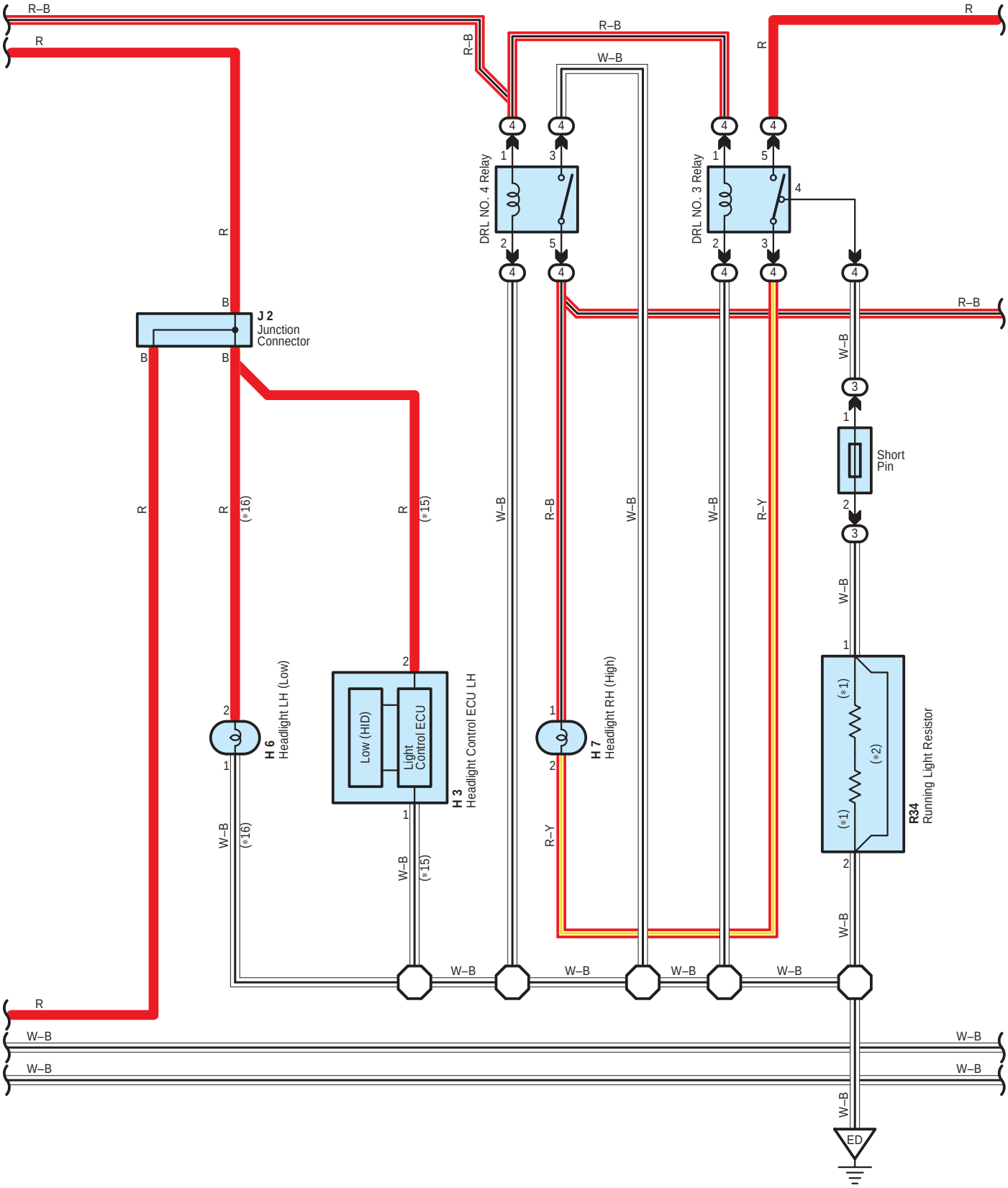

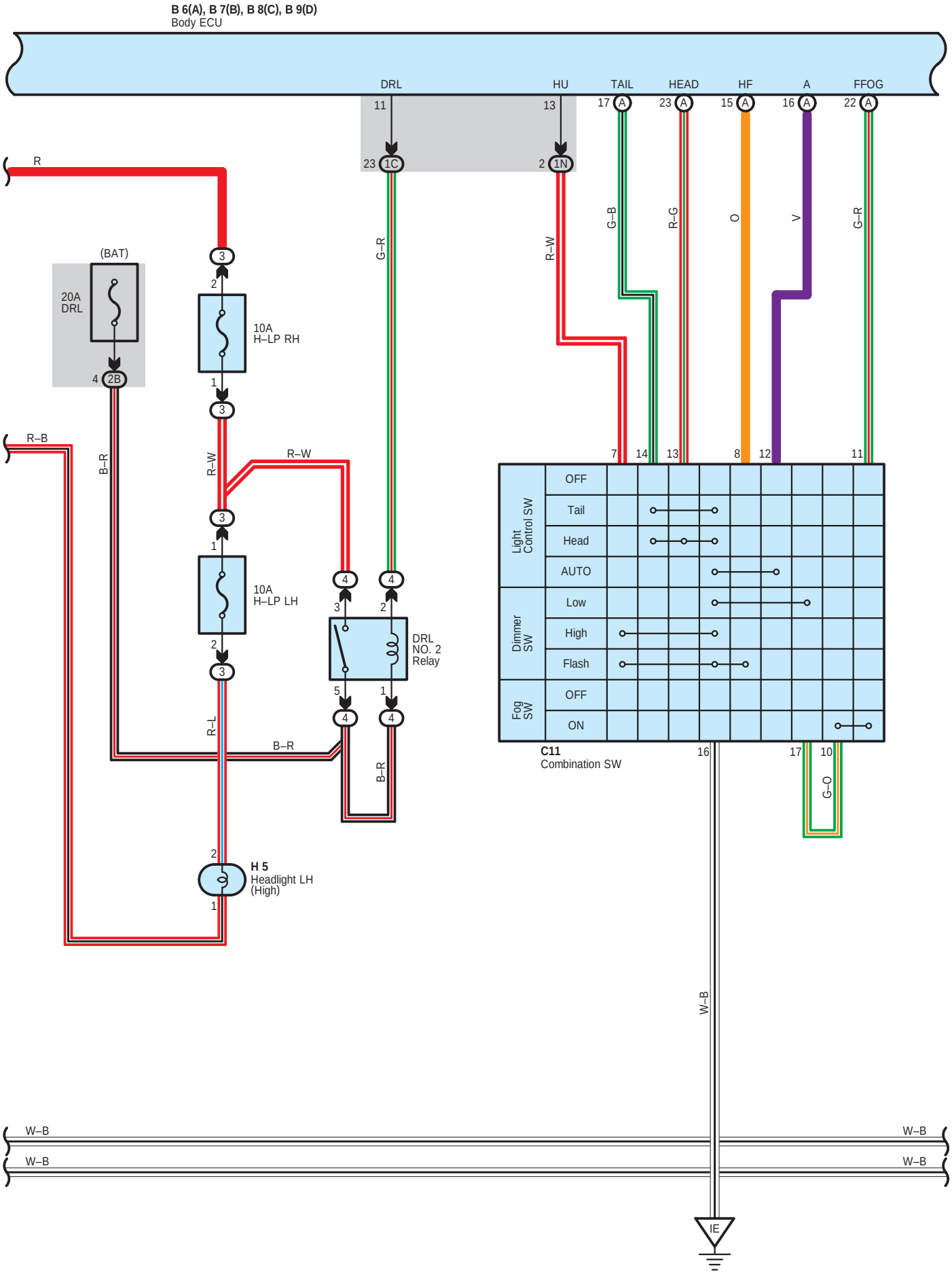
B 6(A), B 7(B), B 8(C), B 9(D)
Body ECU
DRL
HU
TAIL
HEAD
HF
A
FFOG
11
13
17 A
23 A
15 A
16 A
22 A
23 1C
2 1N
R
G–R
R–W
G–B
R–G
O
V
G–R
(BAT)
20A
DRL
4 2B
3
2
10A
H–LP RH
1
3
R–B
B–R
R–W
R–W
3
1
10A
H–LP LH
2
3
4
4
3
2
DRL
NO. 2
Relay
5
1
4
4
R–L
B–R
B–R
2
1
H 5
Headlight LH
(High)
7
14
13
8
12
11
Light
Control SW
OFF
Tail
Head
AUTO
Dimmer
SW
Low
High
Flash
Fog
SW
OFF
ON
C11
Combination SW
16
17
10
G–O
W–B
W–B
W–B
W–B
W–B
IE

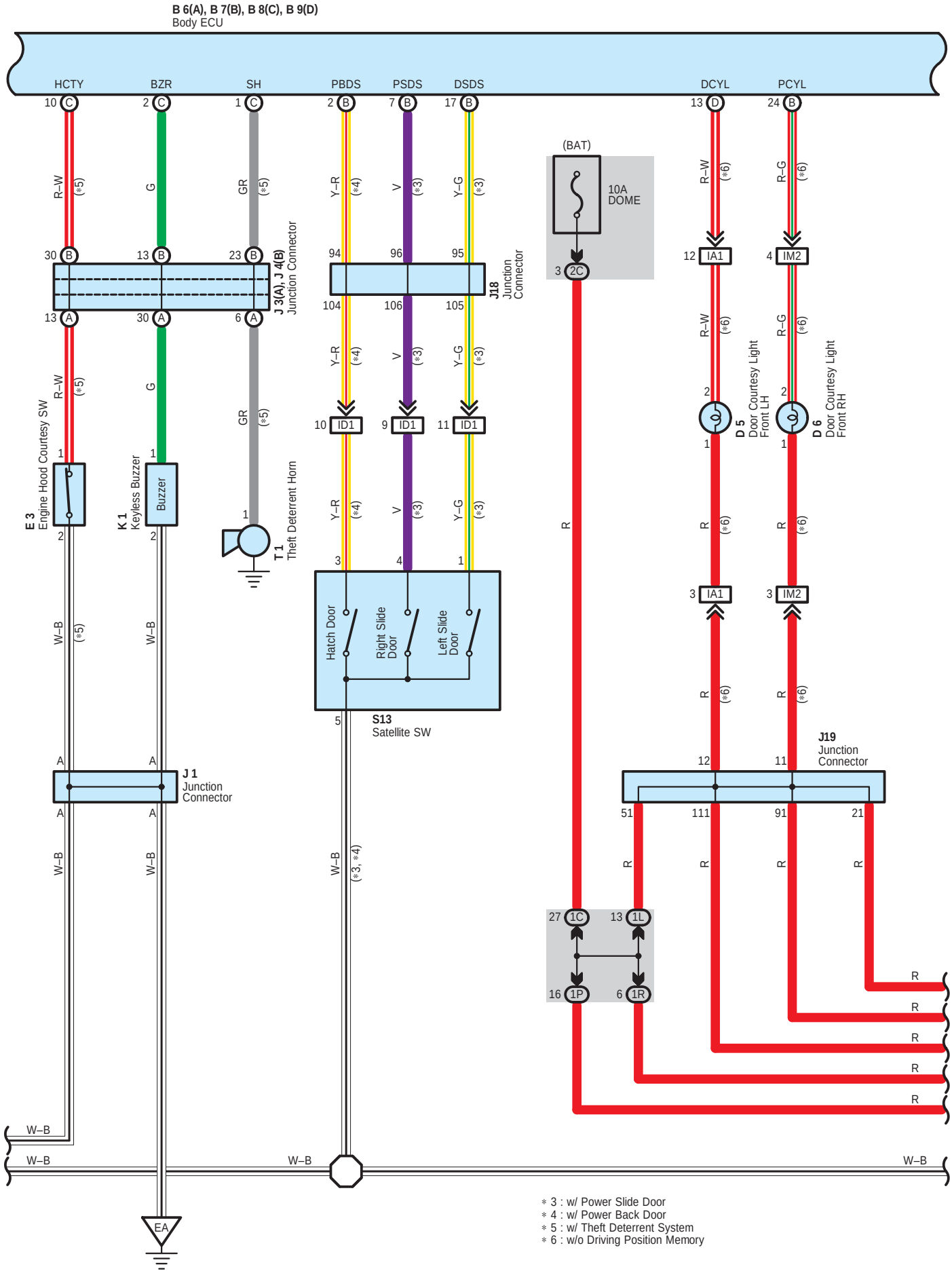
B 6(A), B 7(B), B 8(C), B 9(D)
Body ECU
HCTY
BZR
SH
PBDS
PSDS
DSDS
DCYL
PCYL
(BAT)
10A
DOME
J 3(A), J 4(B)
Junction Connector
J18
Junction
Connector
E 3
Engine Hood Courtesy SW
K 1
Keyless Buzzer
Buzzer
T 1
Theft Deterrent Horn
D 5
Door Courtesy Light
Front LH
D 6
Door Courtesy Light
Front RH
Hatch Door
Right Slide
Door
Left Slide
Door
S13
Satellite SW
J 1
Junction
Connector
J19
Junction
Connector
EA
R–W
G
GR
Y–R
V
Y–G
R–G
W–B
R
(*3)
(*4)
(*5)
(*6)
(*3, *4)
* 3 : w/ Power Slide Door
* 4 : w/ Power Back Door
* 5 : w/ Theft Deterrent System
* 6 : w/o Driving Position Memory

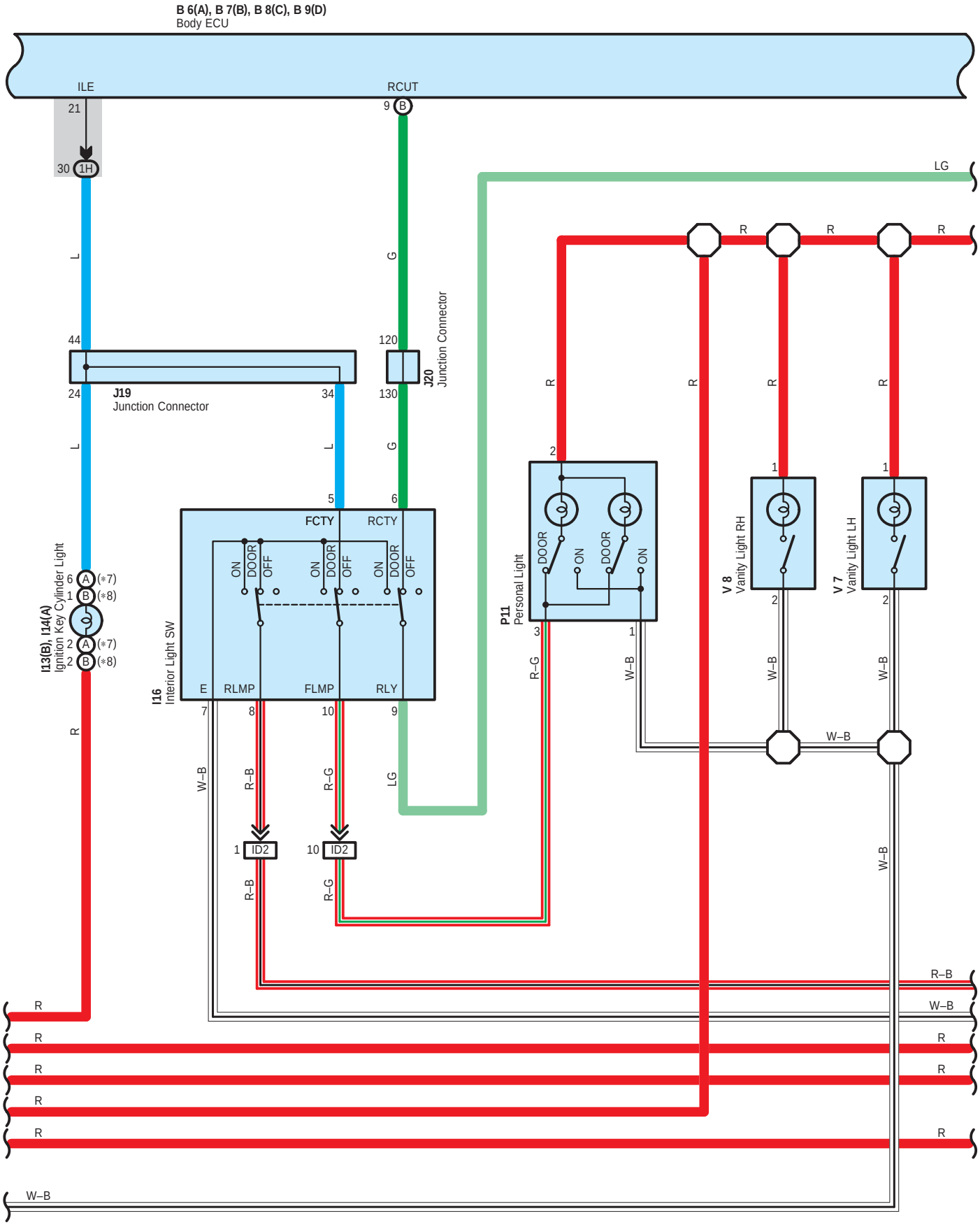
B 6(A), B 7(B), B 8(C), B 9(D)
Body ECU
ILE
RCUT
21
9 B
30 1H
LG
L
G
R
44
120
J19
Junction Connector
J20
Junction Connector
24
34
130
5
6
FCTY
RCTY
ON
DOOR
OFF
I13(B), I14(A)
Ignition Key Cylinder Light
6 A (*7)
1 B (*8)
2 A (*7)
2 B (*8)
I16
Interior Light SW
E
RLMP
FLMP
RLY
7
8
10
9
W–B
R–B
R–G
1 ID2
10 ID2
P11
Personal Light
DOOR
ON
V 8
Vanity Light RH
V 7
Vanity Light LH
1
2
3

B 6(A), B 7(B), B 8(C), B 9(D)
Body ECU

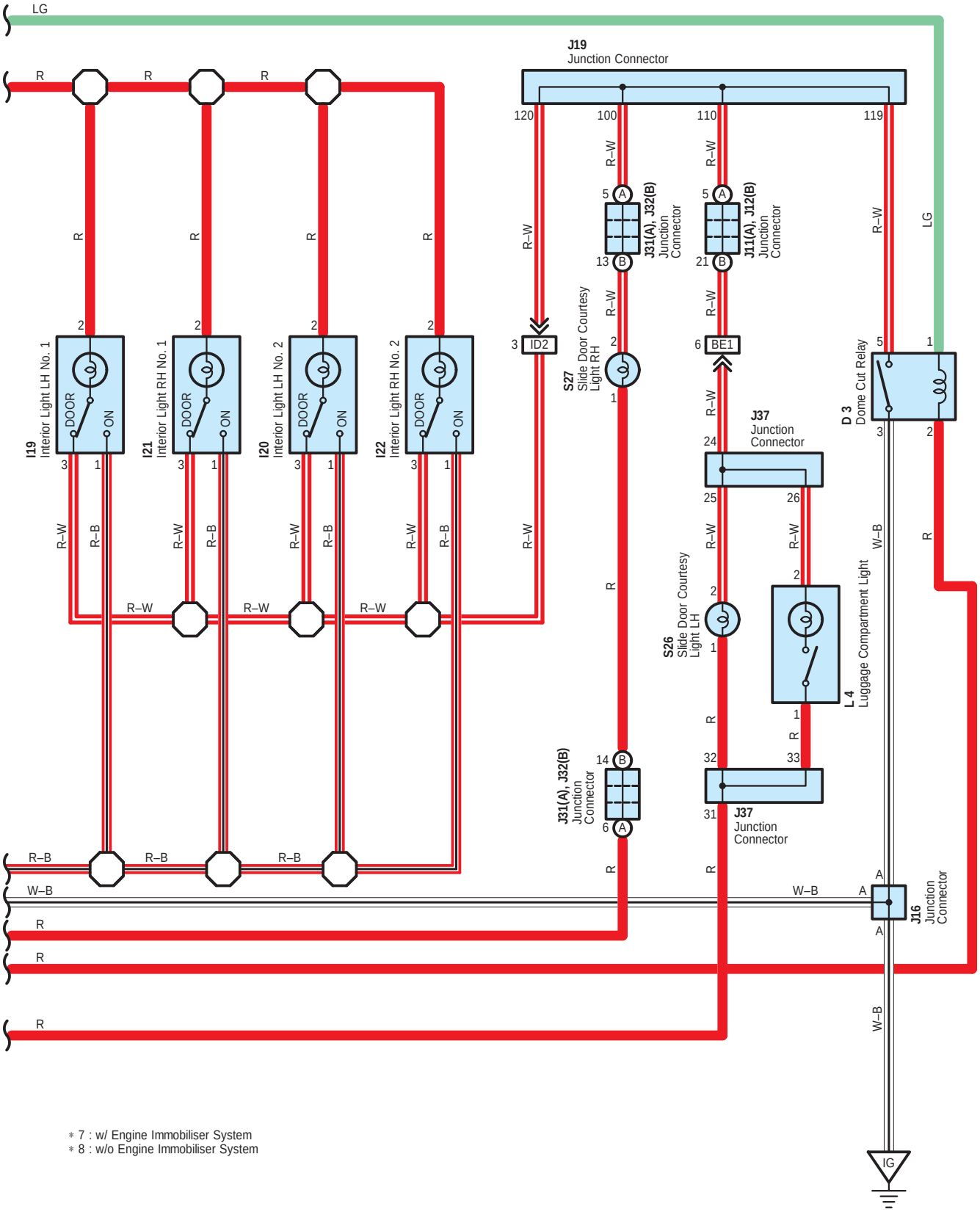

* 7 : w/ Engine Immobiliser System
* 8 : w/o Engine Immobiliser System

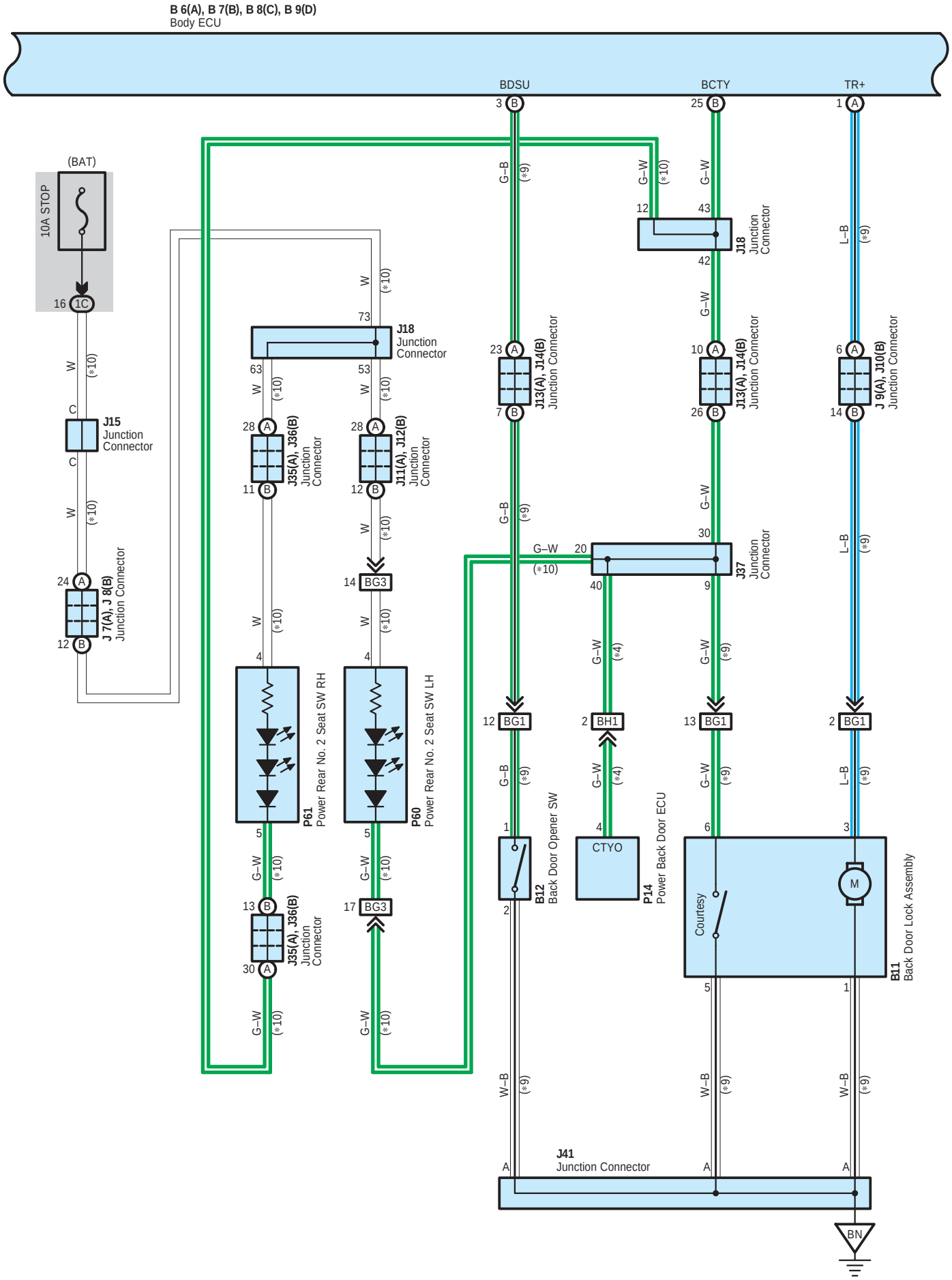
B 6(A), B 7(B), B 8(C), B 9(D)
Body ECU
BDSU
BCTY
TR+
(BAT)
10A STOP
16 1C
J15
Junction Connector
24 A
12 B
J 7(A), J 8(B)
Junction Connector
J18
Junction Connector
J35(A), J36(B)
Junction Connector
J11(A), J12(B)
Junction Connector
P61
Power Rear No. 2 Seat SW RH
P60
Power Rear No. 2 Seat SW LH
J13(A), J14(B)
Junction Connector
J37
Junction Connector
J 9(A), J10(B)
Junction Connector
B12
Back Door Opener SW
P14
Power Back Door ECU
CTYO
Courtesy
M
B11
Back Door Lock Assembly
J41
Junction Connector
BN
G–B
G–W
W
W–B
L–B
(*4)
(*9)
(*10)

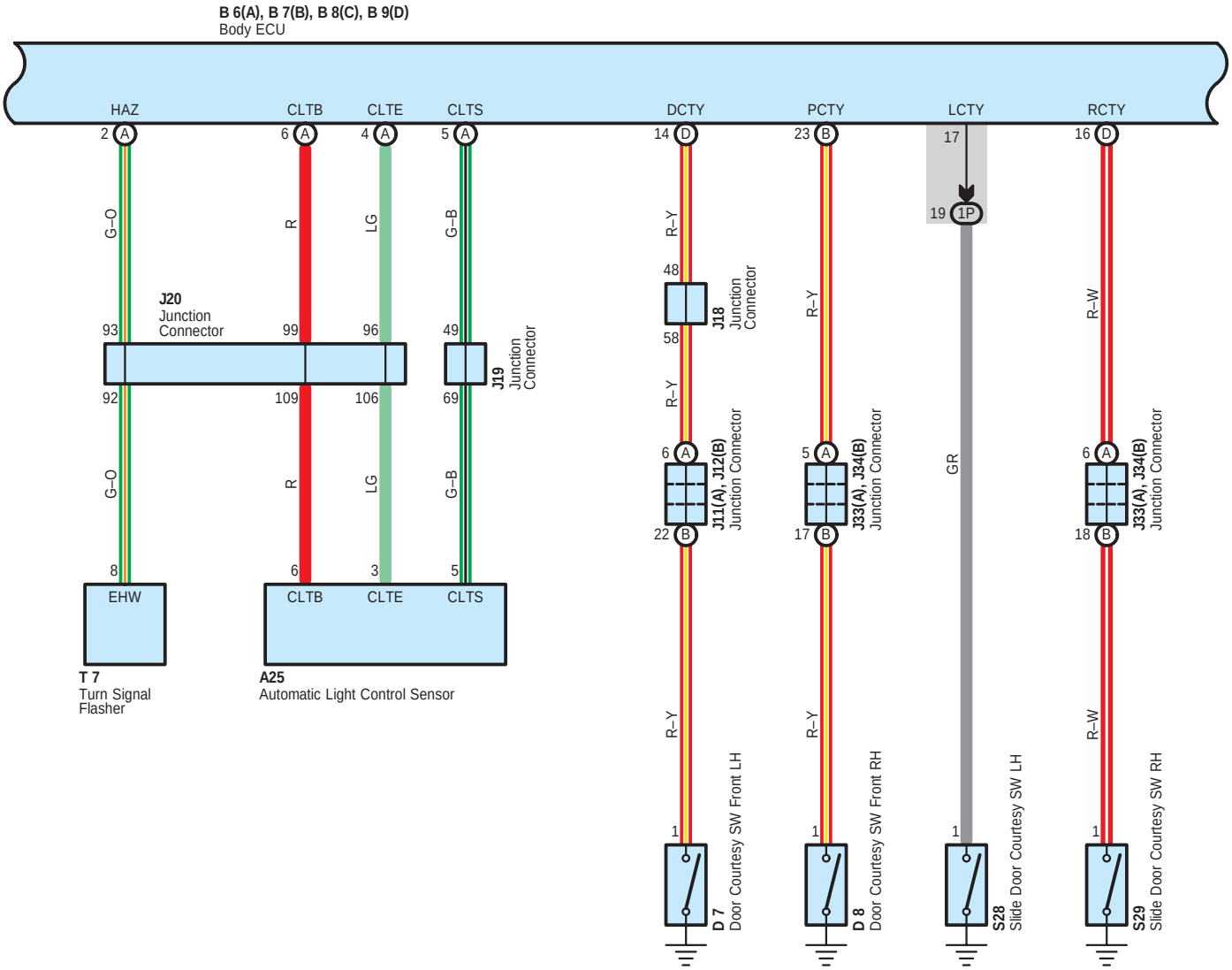

∗ 4 : w/ Power Back Door
∗ 9 : w/o Power Back Door
∗10 : w/ Power Rear No. 2 Seat with Stowing Function

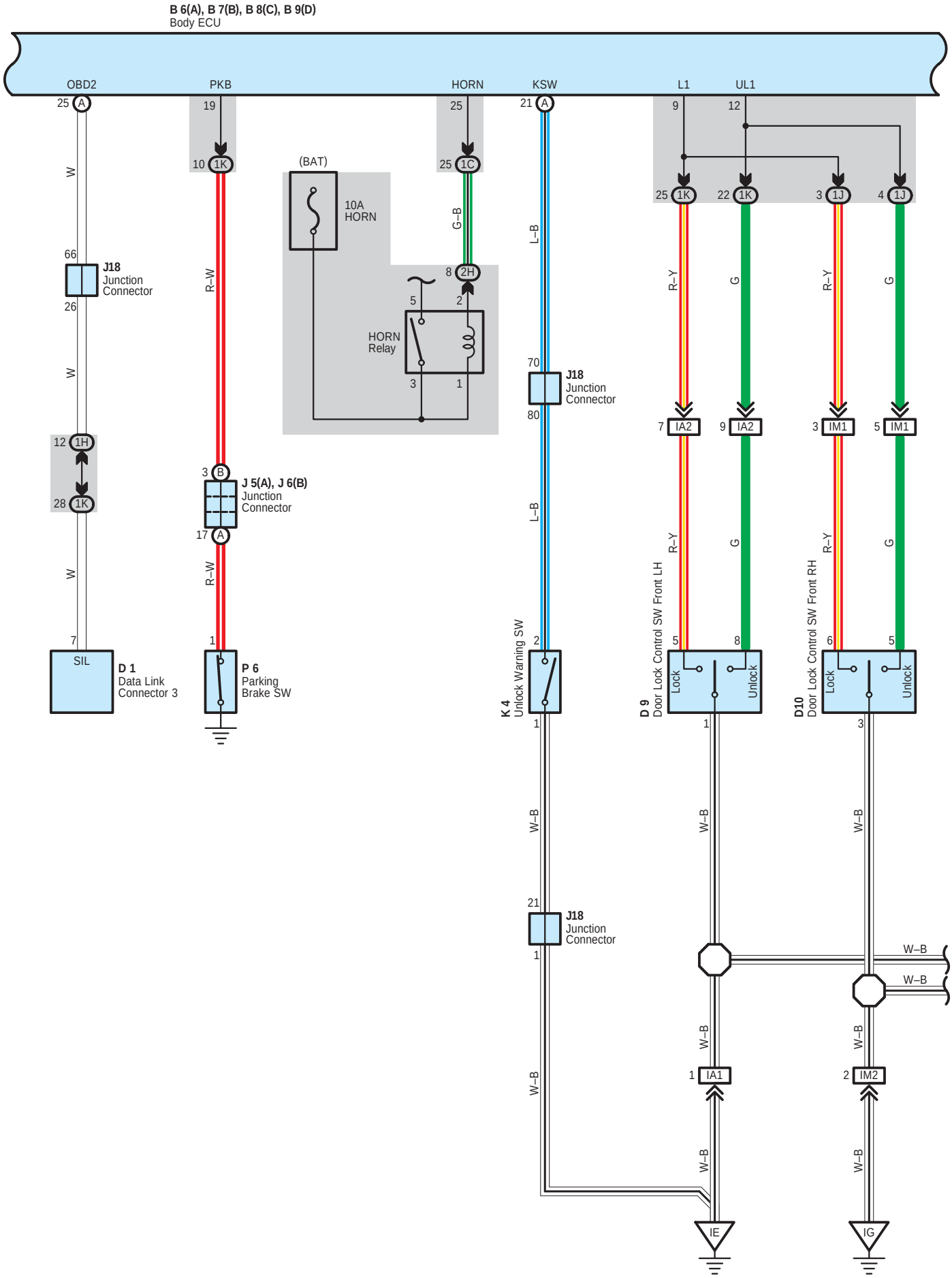
B 6(A), B 7(B), B 8(C), B 9(D)
Body ECU
OBD2
PKB
HORN
KSW
L1
UL1
(BAT)
10A
HORN
HORN
Relay
J18
Junction
Connector
J 5(A), J 6(B)
Junction
Connector
D 1
Data Link
Connector 3
P 6
Parking
Brake SW
K 4
Unlock Warning SW
D 9
Door Lock Control SW Front LH
D10
Door Lock Control SW Front RH
Lock
Unlock
IA1
IA2
IM1
IM2
IE
IG
W
R–W
G–B
L–B
R–Y
G
W–B

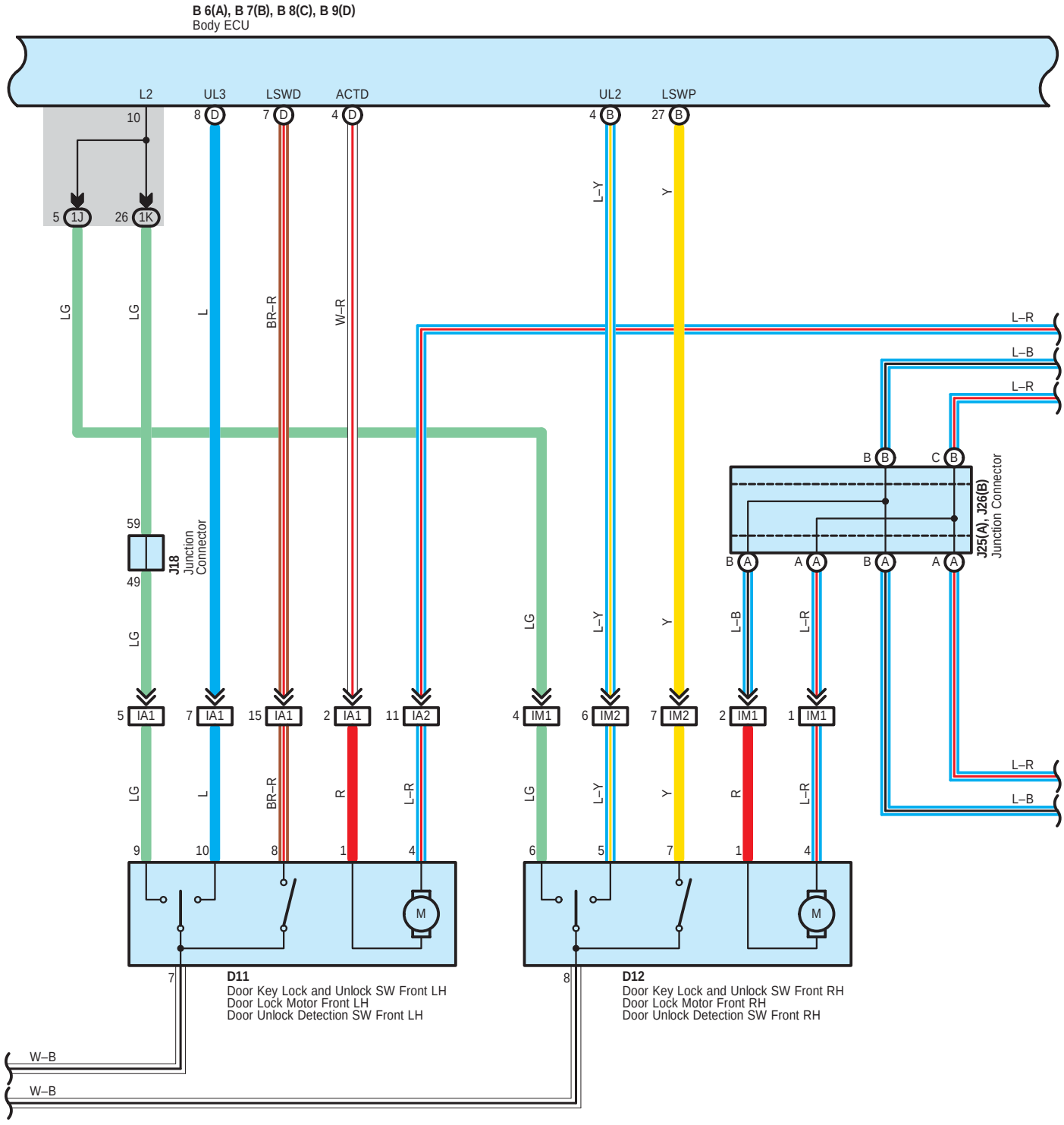
B 6(A), B 7(B), B 8(C), B 9(D)
Body ECU
L2
UL3
LSWD
ACTD
UL2
LSWP
10
8 D
7 D
4 D
4 B
27 B
5 1J
26 1K
L–Y
Y
LG
LG
L
BR–R
W–R
L–R
L–B
L–R
B B
C B
B A
A A
B A
A A
J25(A), J26(B)
Junction Connector
59
49
J18
Junction
Connector
LG
LG
L–B
L–R
5 IA1
7 IA1
15 IA1
2 IA1
11 IA2
4 IM1
6 IM2
7 IM2
2 IM1
1 IM1
LG
L
BR–R
R
L–R
LG
L–Y
Y
R
L–R
9
10
8
1
4
6
5
7
1
4
M
M
7
8
D11
Door Key Lock and Unlock SW Front LH
Door Lock Motor Front LH
Door Unlock Detection SW Front LH
D12
Door Key Lock and Unlock SW Front RH
Door Lock Motor Front RH
Door Unlock Detection SW Front RH
W–B
W–B

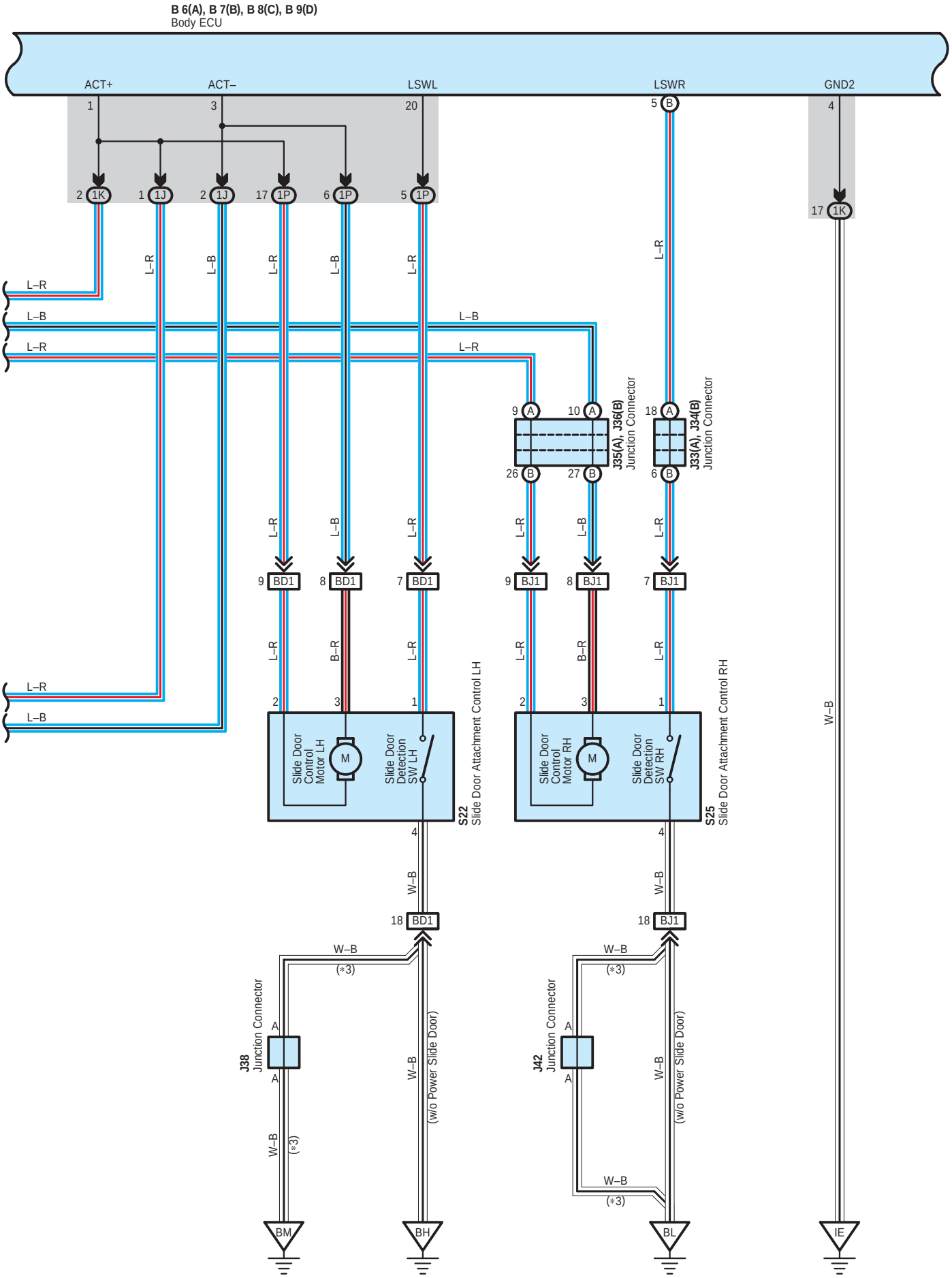
B 6(A), B 7(B), B 8(C), B 9(D)
Body ECU
ACT+
ACT–
LSWL
LSWR
GND2
J35(A), J36(B)
Junction Connector
J33(A), J34(B)
Junction Connector
Slide Door Control Motor LH
Slide Door Detection SW LH
S22
Slide Door Attachment Control LH
Slide Door Control Motor RH
Slide Door Detection SW RH
S25
Slide Door Attachment Control RH
J38
Junction Connector
J42
Junction Connector
(w/o Power Slide Door)
BM
BH
BL
IE

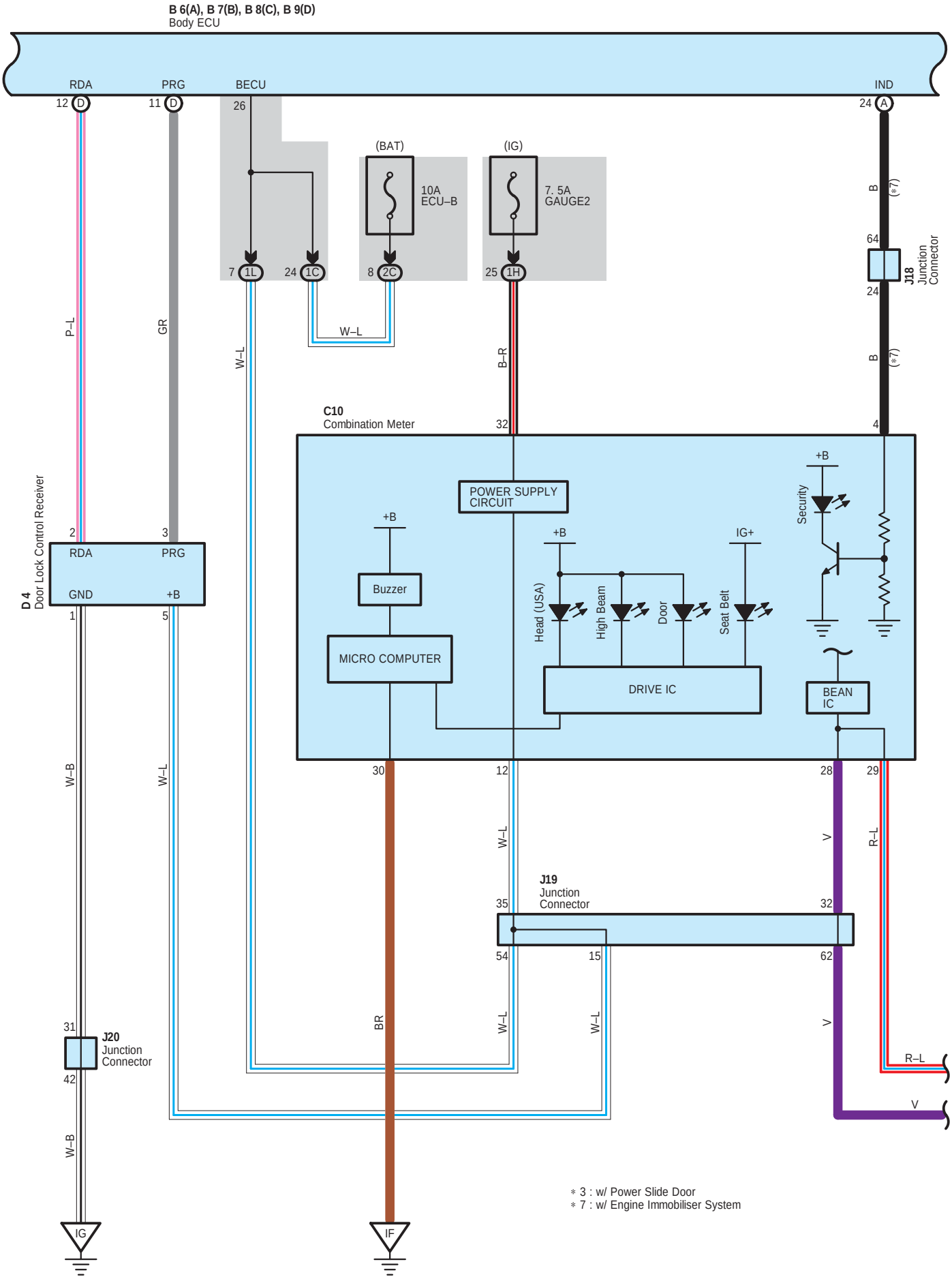
B 6(A), B 7(B), B 8(C), B 9(D)
Body ECU
RDA
PRG
BECU
IND
12 D
11 D
26
24 A
(BAT)
(IG)
10A
ECU–B
7. 5A
GAUGE2
7 1L
24 1C
8 2C
25 1H
B (*7)
64
J18
Junction
Connector
24
B (*7)
P–L
GR
W–L
W–L
B–R
C10
Combination Meter
32
4
POWER SUPPLY
CIRCUIT
+B
+B
IG+
+B
Security
Buzzer
Head (USA)
High Beam
Door
Seat Belt
MICRO COMPUTER
DRIVE IC
BEAN
IC
D 4
Door Lock Control Receiver
2
3
RDA
PRG
GND
+B
1
5
30
12
28
29
W–B
W–L
W–L
V
R–L
J19
Junction
Connector
35
32
54
15
62
BR
W–L
W–L
V
R–L
V
31
J20
Junction
Connector
42
W–B
IG
IF
* 3 : w/ Power Slide Door
* 7 : w/ Engine Immobiliser System

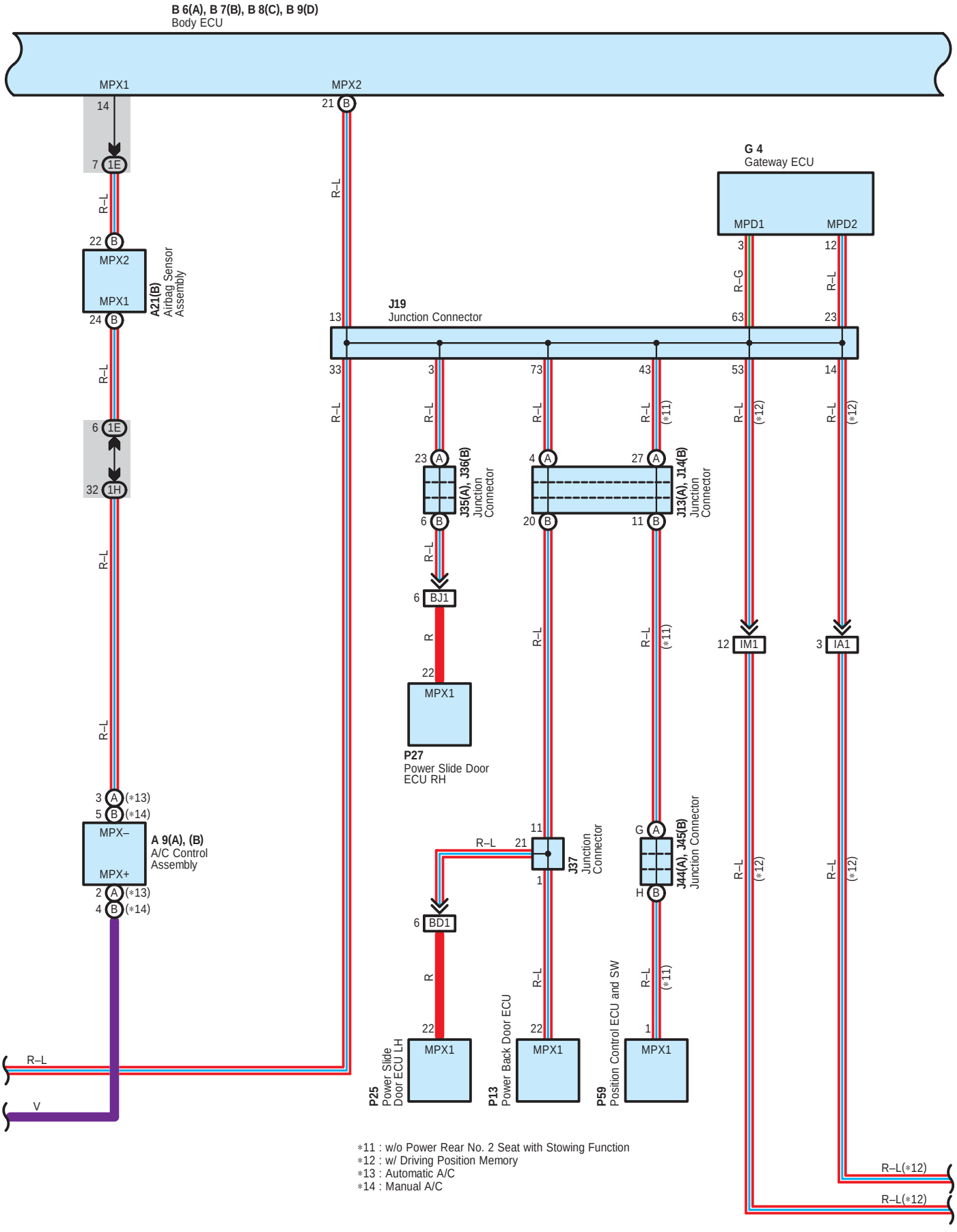
B 6(A), B 7(B), B 8(C), B 9(D)
Body ECU
MPX1
MPX2
G 4
Gateway ECU
MPD1
MPD2
J19
Junction Connector
A21(B)
Airbag Sensor Assembly
A 9(A), (B)
A/C Control Assembly
J35(A), J36(B)
Junction Connector
J13(A), J14(B)
Junction Connector
J37
Junction Connector
J44(A), J45(B)
Junction Connector
P27
Power Slide Door ECU RH
P25
Power Slide Door ECU LH
P13
Power Back Door ECU
P59
Position Control ECU and SW
BJ1
BD1
IM1
IA1
R–L
R–G
R
V
R–L(∗12)
∗11 : w/o Power Rear No. 2 Seat with Stowing Function
∗12 : w/ Driving Position Memory
∗13 : Automatic A/C
∗14 : Manual A/C

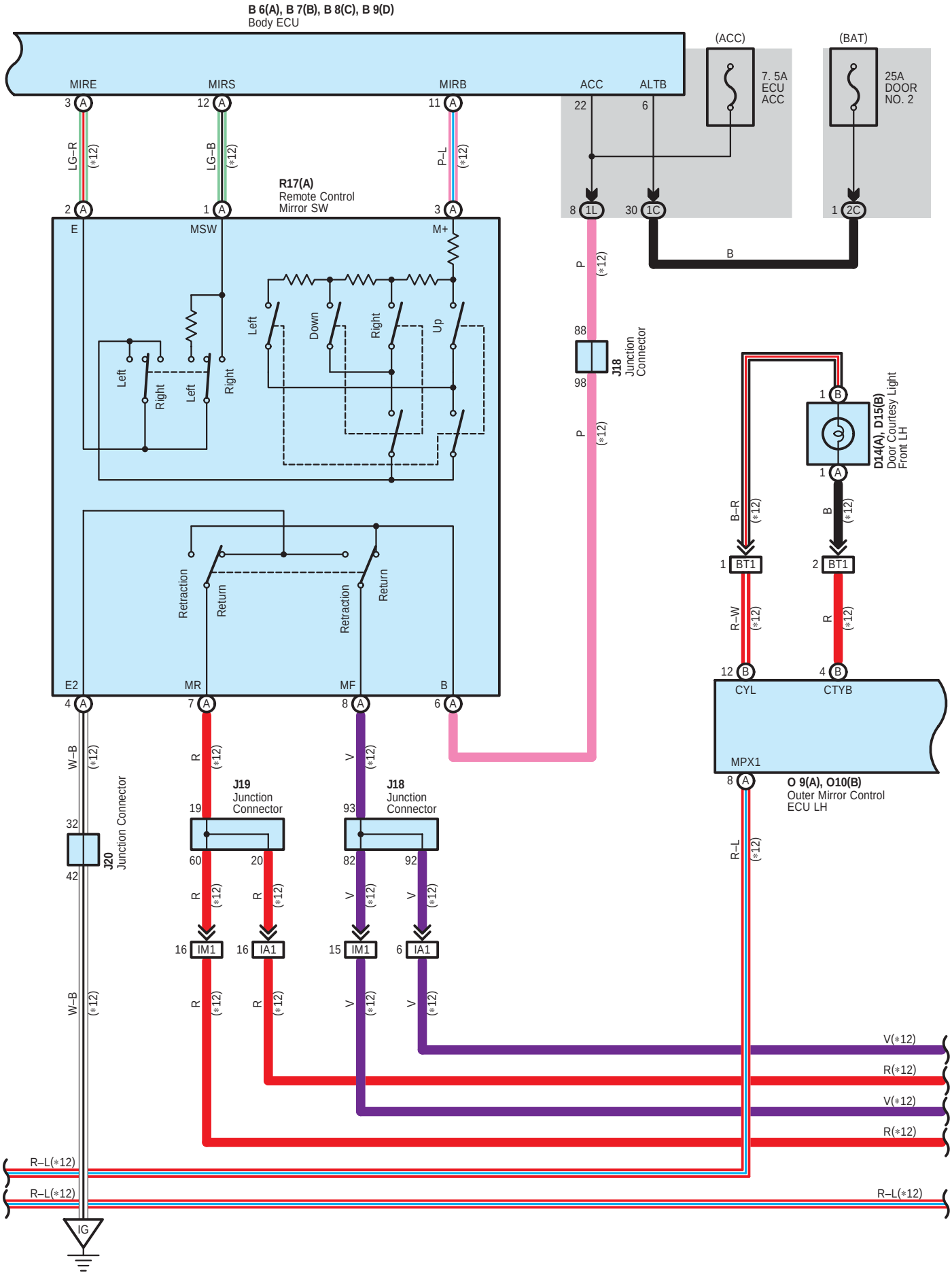
B 6(A), B 7(B), B 8(C), B 9(D)
Body ECU
MIRE
MIRS
MIRB
ACC
ALTB
(ACC)
7. 5A
ECU
ACC
(BAT)
25A
DOOR
NO. 2
LG–R
LG–B
P–L
(*12)
R17(A)
Remote Control
Mirror SW
E
MSW
M+
Left
Right
Down
Up
P
J18
Junction
Connector
D14(A), D15(B)
Door Courtesy Light
Front LH
B–R
B
BT1
R–W
R
CYL
CTYB
MPX1
O 9(A), O10(B)
Outer Mirror Control
ECU LH
R–L
E2
MR
MF
B
Retraction
Return
W–B
J20
Junction Connector
J19
Junction
Connector
J18
Junction
Connector
IM1
IA1
V
V(*12)
R(*12)
R–L(*12)
IG

∗12 : w/ Driving Position Memory

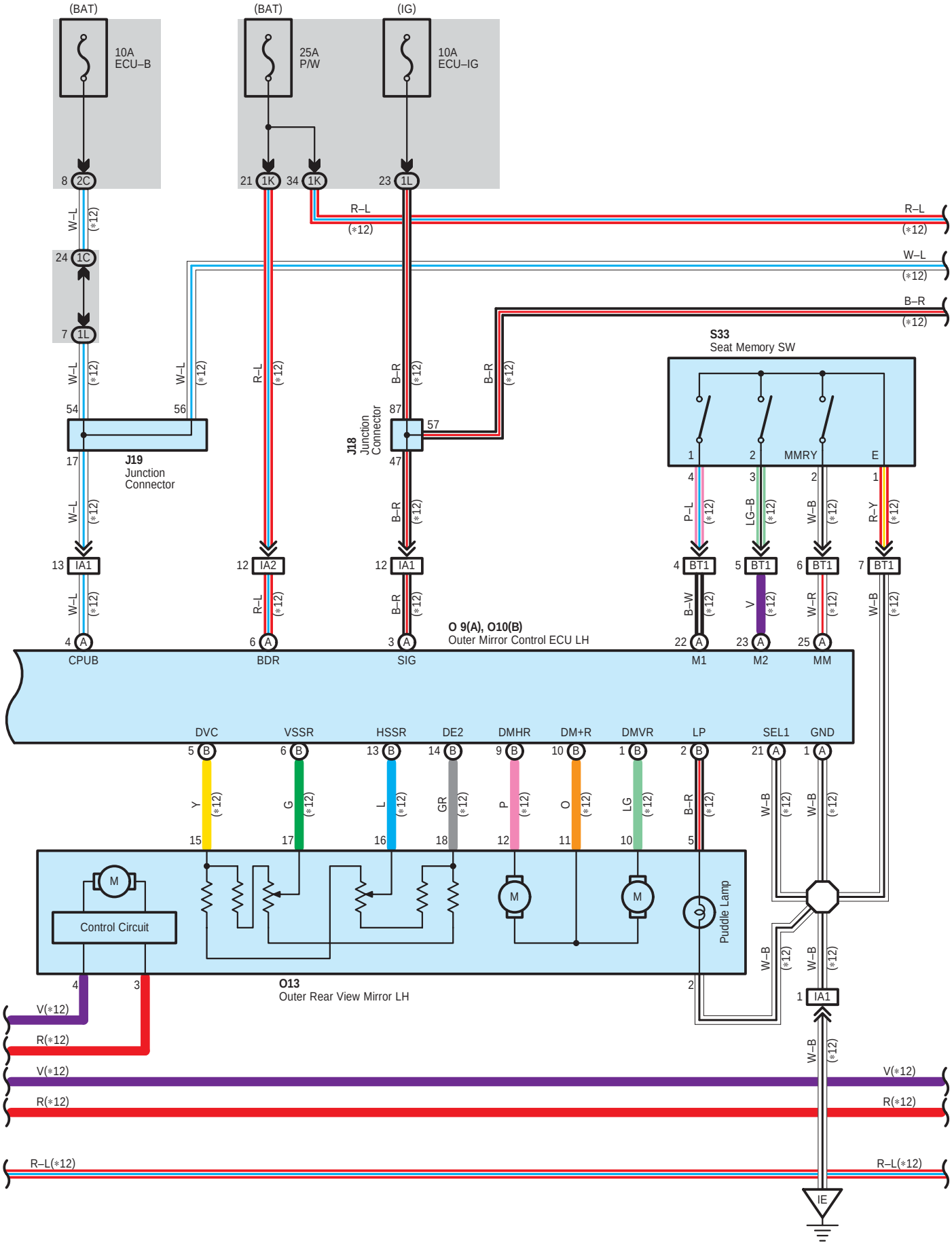

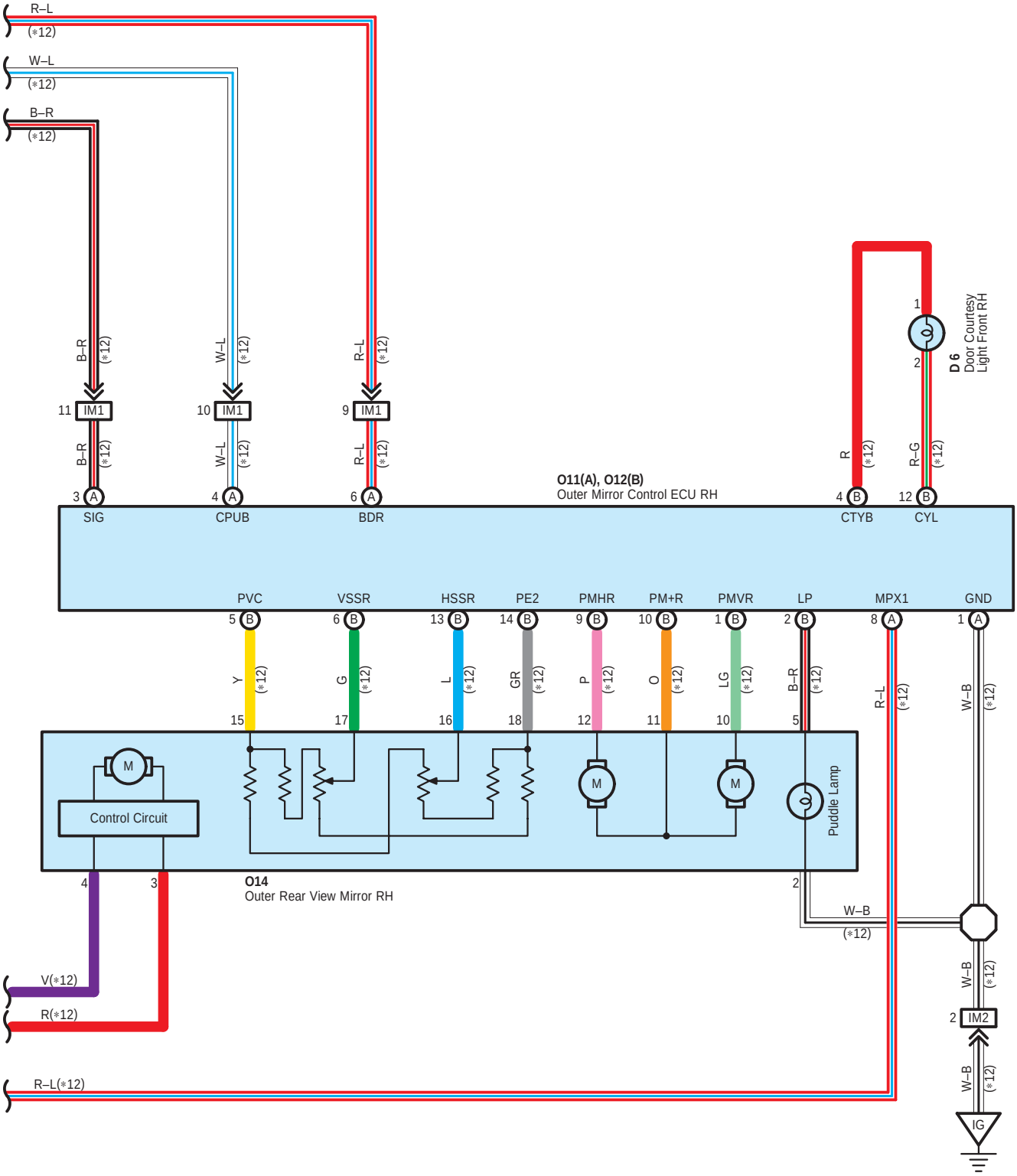
R–L
(∗12)
W–L
(∗12)
B–R
(∗12)
B–R
(∗12)
W–L
(∗12)
R–L
(∗12)
11 IM1
10 IM1
9 IM1
B–R
(∗12)
W–L
(∗12)
R–L
(∗12)
3 A
SIG
4 A
CPUB
6 A
BDR
O11(A), O12(B)
Outer Mirror Control ECU RH
R
(∗12)
R–G
(∗12)
4 B
CTYB
12 B
CYL
1
2
D 6
Door Courtesy
Light Front RH
PVC
VSSR
HSSR
PE2
PMHR
PM+R
PMVR
LP
MPX1
GND
5 B
6 B
13 B
14 B
9 B
10 B
1 B
2 B
8 A
1 A
Y
(∗12)
G
(∗12)
L
(∗12)
GR
(∗12)
P
(∗12)
O
(∗12)
LG
(∗12)
B–R
(∗12)
R–L
(∗12)
W–B
(∗12)
15
17
16
18
12
11
10
5
M
Control Circuit
M
M
Puddle Lamp
4
3
2
O14
Outer Rear View Mirror RH
W–B
(∗12)
V(∗12)
R(∗12)
W–B
(∗12)
2 IM2
W–B
(∗12)
IG
R–L(∗12)

○ : **Parts Location**

Code	See Page	Code	See Page	Code	See Page
A9 A	38	I13 B	39	J41	43
A9 B	38	I14 A	39	J42	43
A21 B	38	I16	39	J44 A	46 (*1)
A25	38	I19	42	J45 B	46 (*1)
B6 A	38	I20	42	K1	37
B7 B	38	I21	42	K4	40
B8 C	38	I22	42	L4	43
B9 D	38	J1	37	O9 A	43
B11	42	J2	37	O10 B	43
B12	42	J3 A	40	O11 A	43
C10	39	J4 B	40	O12 B	43
C11	39	J5 A	40	O13	43
D1	39	J6 B	40	O14	43
D3	39	J7 A	40	P6	41
D4	39	J8 B	40	P11	44
D5	42	J9 A	40	P13	44
D6	42	J10 B	40	P14	44
D7	42	J11 A	40	P25	44
D8	42	J12 B	40	P27	44
D9	42	J13 A	40	P59	46
D10	42	J14 B	40	P60	44
D11	42	J15	40	P61	44
D12	42	J16	40	R17 A	41
D14 A	42	J18	40	R34	37
D15 B	42	J19	40	S13	45
E3	36	J20	40	S22	45
F1	36	J25 A	40	S25	45
F2	36	J26 B	40	S26	45
F6 A	36	J27	40	S27	45
F7 B	36	J31 A	40	S28	45
G4	39	J32 B	40	S29	45
H3	36	J33 A	40	S33	45
H4	36	J34 B	40	T1	37
H5	36	J35 A	40	T7	41
H6	36	J36 B	40	V7	45
H7	36	J37	43	V8	45
H8	36	J38	43		

▭ : **Relay Blocks**

Code	See Page	Relay Blocks (Relay Block Location)
3	26	R/B No.3 (Engine Compartment Left)
4	27	R/B No.4 (Engine Compartment Left)

* 1 : Front Seat w/ Power Seat * 2 : Front Seat w/o Power Seat * 3 : Rear No.2 Seat

: Junction Block and Wire Harness Connector

Code	See Page	Junction Block and Wire Harness (Connector Location)
1A	31	Engine Room Main Wire and Driver Side J/B (Lower Finish Panel)
1C		
1E	31	Instrument Panel Wire and Driver Side J/B (Lower Finish Panel)
1H	30	
1J	31	
1K		
1L		
1N		
1P	31	Floor No.1 Wire and Driver Side J/B (Lower Finish Panel)
1R	31	Roof Wire and Driver Side J/B (Lower Finish Panel)
2B	24	Engine Room Main Wire and Engine Room J/B (Engine Compartment Left)
2C		
2F		
2G		
2H		

: Connector Joining Wire Harness and Wire Harness

Code	See Page	Joining Wire Harness and Wire Harness (Connector Location)
IA1	52	Front Door LH Wire and Instrument Panel Wire (Left Kick Panel)
IA2		
ID1	52	Roof Wire and Instrument Panel Wire (Near the Driver Side J/B)
ID2		
IM1	53	Front Door RH Wire and Instrument Panel Wire (Right Kick Panel)
IM2		
BD1	54	Rear Door No.2 Wire and Floor No.1 Wire (On the Left Rear Wheel House)
BE1	54	Floor No.1 Wire and Floor No.1 Wire (Left Rear Quarter Panel)
BG1	55	Back Door No.1 Wire and Floor No.1 Wire (Left Rear Quarter Panel)
BG3		
BH1	55	Floor No.1 Wire and Floor No.1 Wire (Left Rear Quarter Panel)
BJ1	55	Rear Door No.1 Wire and Floor No.2 Wire (On the Right Rear Wheel House)
BT1	55	Front Door LH Wire and Courtesy Lamp Switch Wire Assembly (Inside Front Door Trim LH)

: Ground Points

Code	See Page	Ground Points Location
EA	50	Front Side of the Right Fender Apron
ED	50	Front Side of the Left Fender Apron
IE	52	Left Kick Panel
IF	52	Instrument Panel Brace LH
IG	52	Right Kick Panel
BH	54	Under the Left Center Pillar
BL	54	Right Rear Quarter Panel
BM	54	Left Rear Quarter Panel
BN	54	Left Side of the Back Door

* 1 : Front Seat w/ Power Seat * 2 : Front Seat w/o Power Seat * 3 : Rear No.2 Seat