1 SIENNA

(Cont. next page)

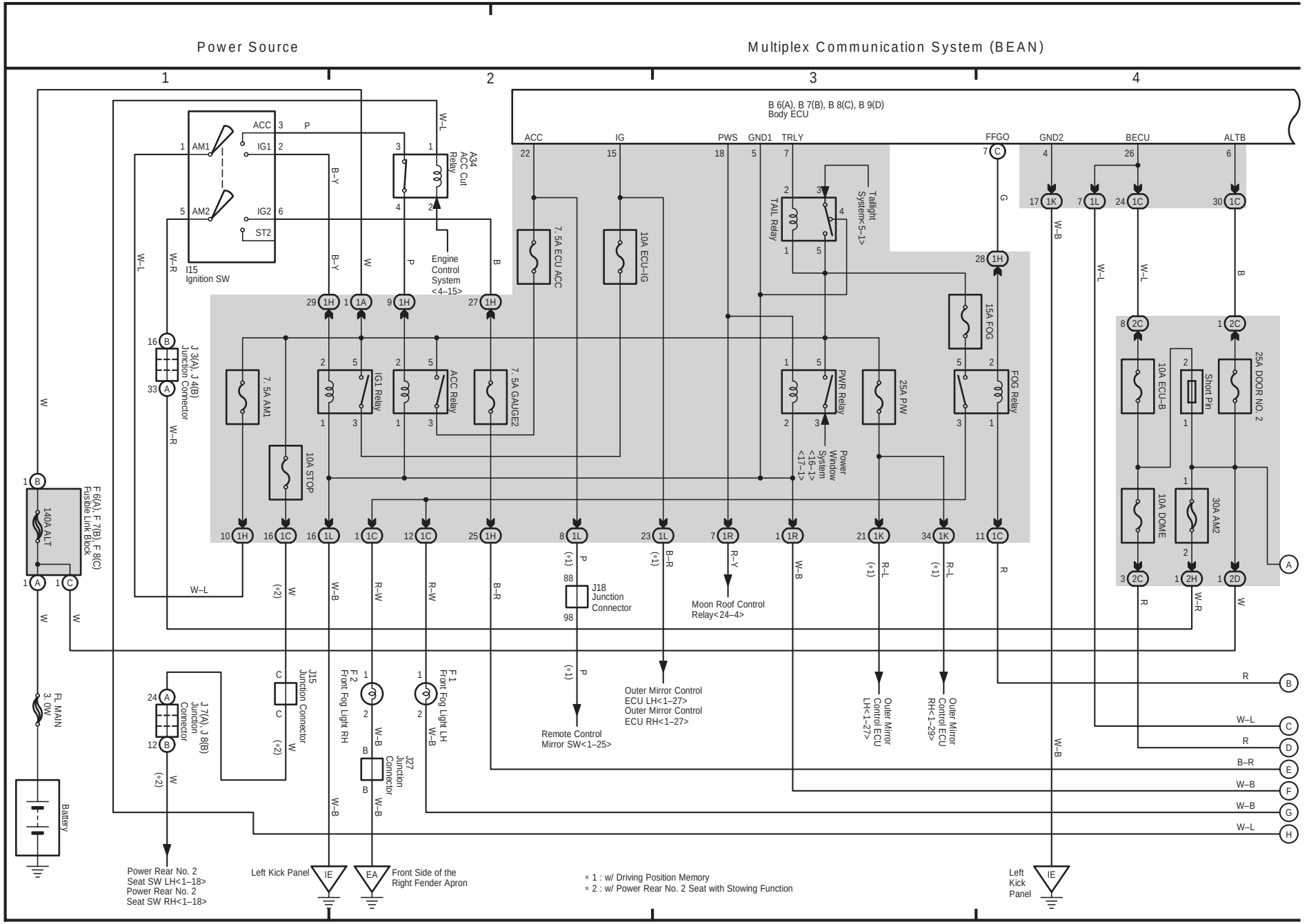

(Cont. next page)

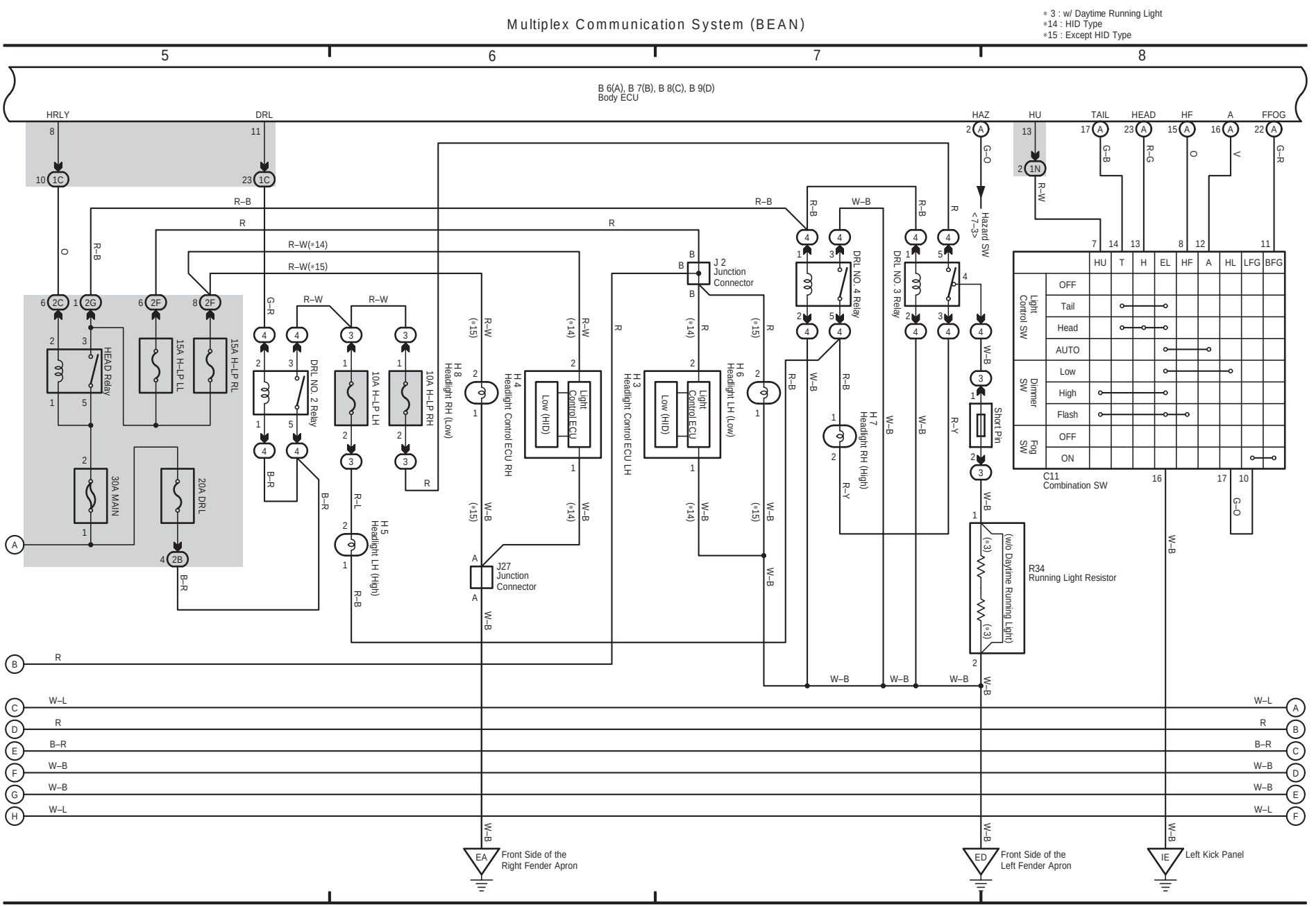

1 SIENNA (Cont' d)

(Cont. next page)

Multiplex Communication System (BEAN)

* 1 : w/ Driving Position Memory
* 4 : w/ Engine Immobiliser System
* 5 : w/o Engine Immobiliser System
* 6 : w/o Driving Position Memory
* 7 : w/ Theft Deterrent System
*12 : Automatic A/C
*13 : Manual A/C

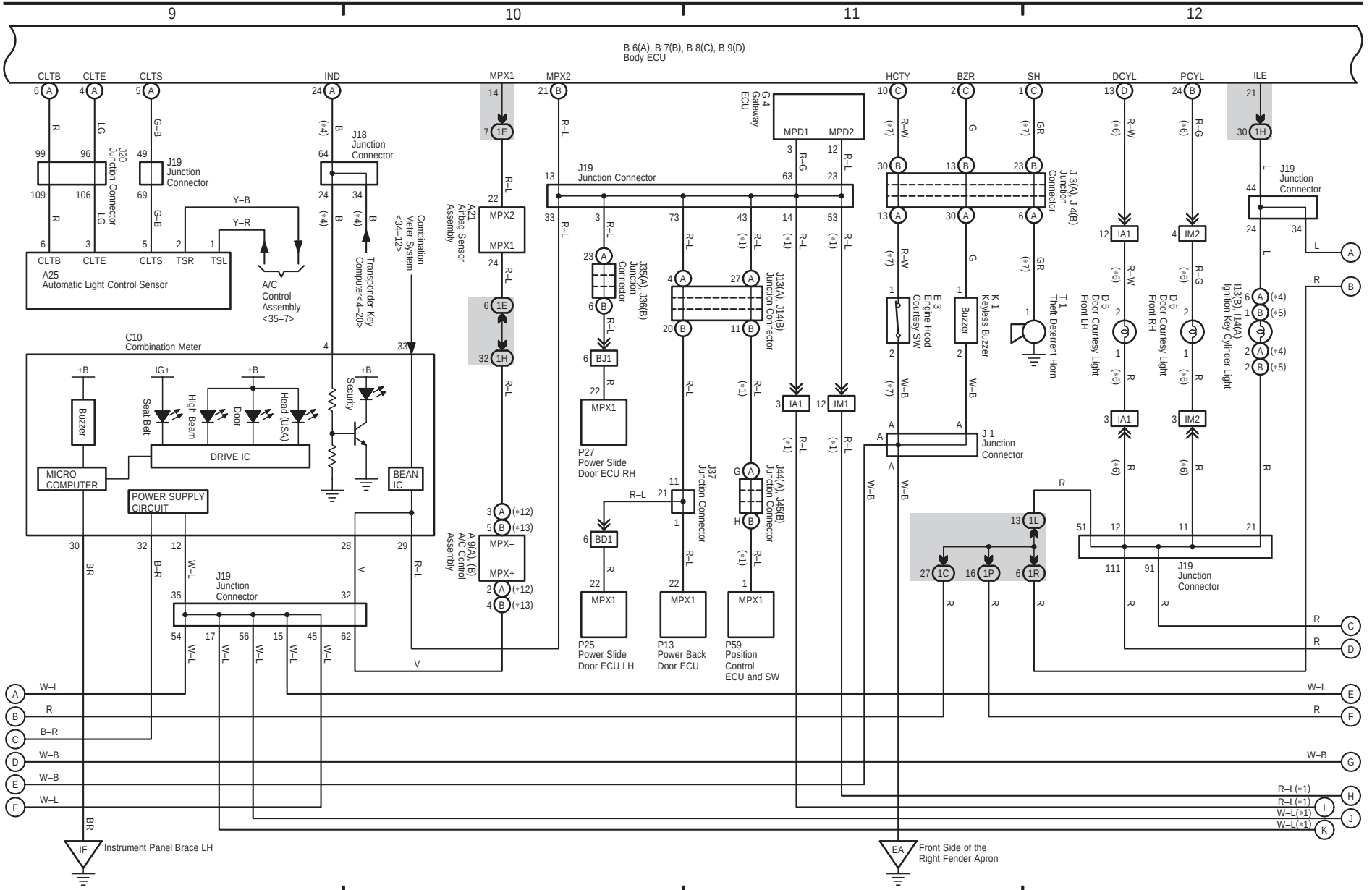

(Cont. next page)

Multiplex Communication System (BEAN)

* 1 : w/ Driving Position Memory
* 8 : w/ Power Slide Door
* 9 : w/ Power Back Door

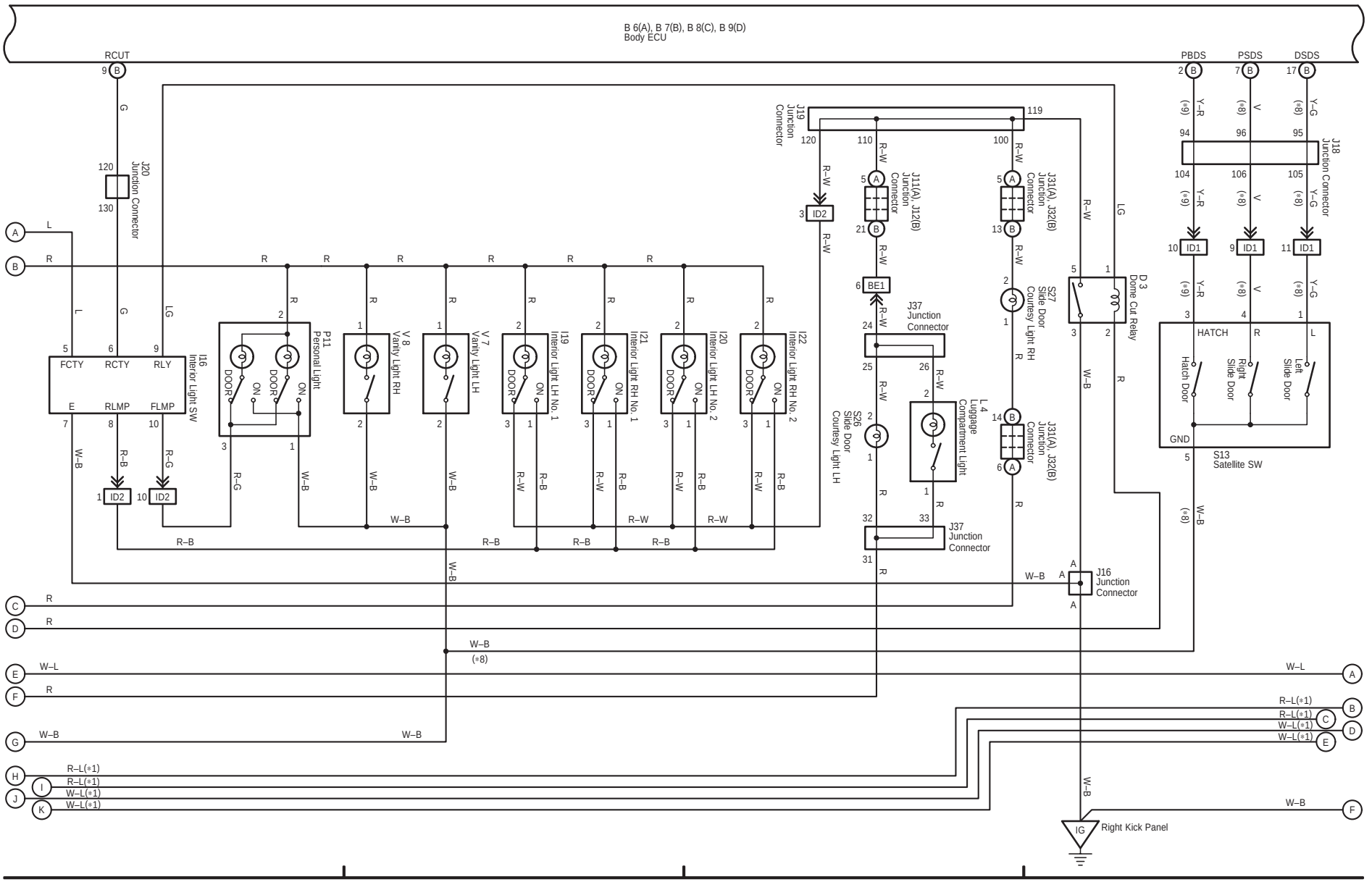

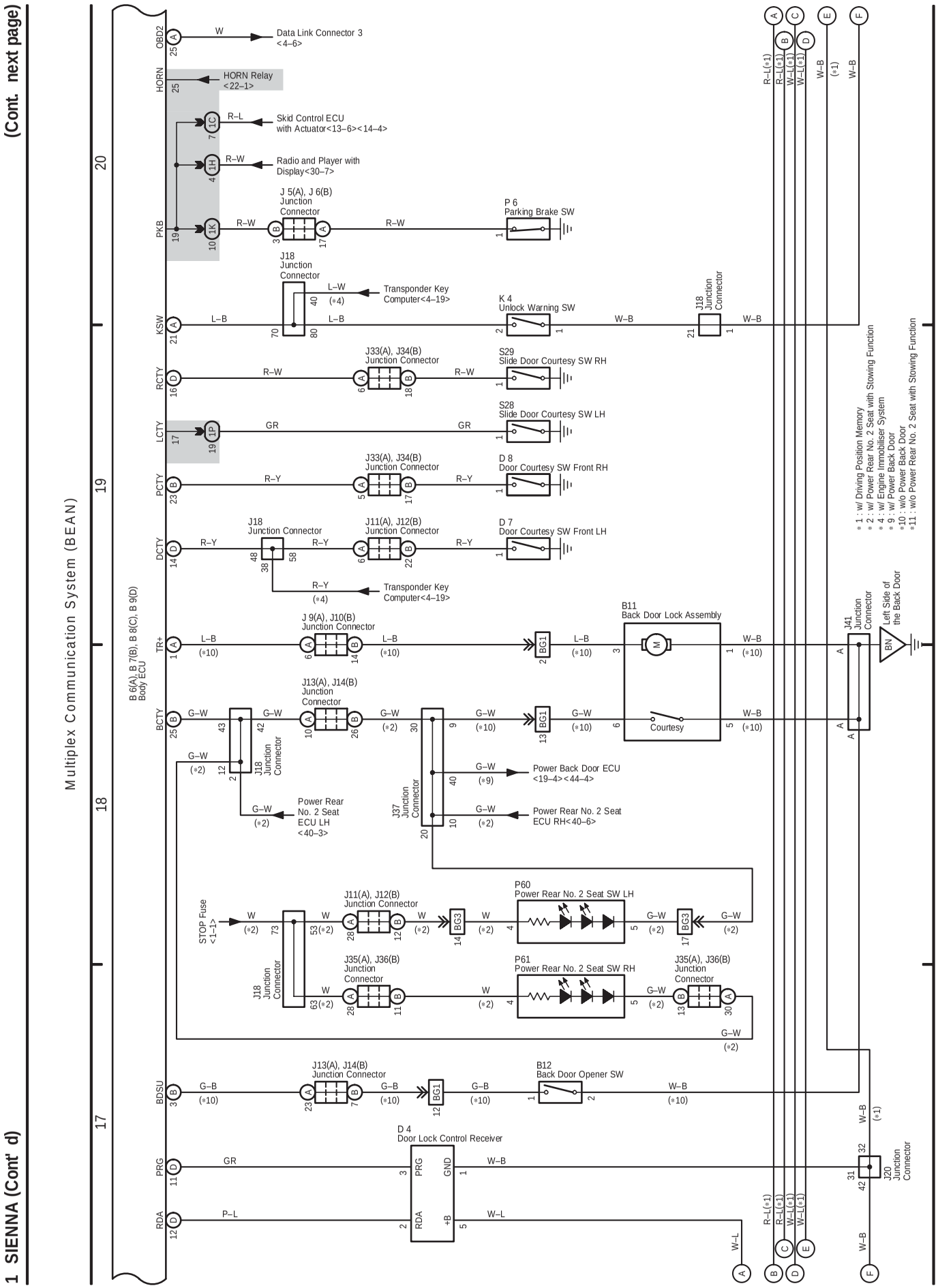
(Cont. next page)
1 SIENNA (Cont' d)
Multiplex Communication System (BEAN)
B 6(A), B 7(B), B 8(C), B 9(D)
Body ECU
OBD2
Data Link Connector 3
<4–6>
HORN
HORN Relay
<22–1>
Skid Control ECU
with Actuator<13–6><14–4>
Radio and Player with
Display<30–7>
PKB
J 5(A), J 6(B)
Junction
Connector
P 6
Parking Brake SW
J18
Junction
Connector
Transponder Key
Computer<4–19>
K 4
Unlock Warning SW
KSW
J18
Junction
Connector
J33(A), J34(B)
Junction Connector
S29
Slide Door Courtesy SW RH
RCTY
S28
Slide Door Courtesy SW LH
LCTY
J33(A), J34(B)
Junction Connector
D 8
Door Courtesy SW Front RH
PCTY
J18
Junction Connector
J11(A), J12(B)
Junction Connector
D 7
Door Courtesy SW Front LH
DCTY
Transponder Key
Computer<4–19>
J 9(A), J10(B)
Junction Connector
B11
Back Door Lock Assembly
TR+
J41
Junction
Connector
Left Side of
the Back Door
J13(A), J14(B)
Junction
Connector
BCTY
Courtesy
J18
Junction
Connector
Power Rear
No. 2 Seat
ECU LH
<40–3>
J37
Junction
Connector
Power Back Door ECU
<19–4><44–4>
Power Rear No. 2 Seat
ECU RH<40–6>
STOP Fuse
<1–1>
J11(A), J12(B)
Junction Connector
P60
Power Rear No. 2 Seat SW LH
J18
Junction
Connector
J35(A), J36(B)
Junction
Connector
P61
Power Rear No. 2 Seat SW RH
J35(A), J36(B)
Junction
Connector
J13(A), J14(B)
Junction Connector
B12
Back Door Opener SW
BDSU
D 4
Door Lock Control Receiver
PRG
RDA
J20
Junction
Connector
* 1 : w/ Driving Position Memory
* 2 : w/ Power Rear No. 2 Seat with Stowing Function
* 4 : w/ Engine Immobiliser System
* 9 : w/ Power Back Door
*10 : w/o Power Back Door
*11 : w/o Power Rear No. 2 Seat with Stowing Function

(Cont. next page)

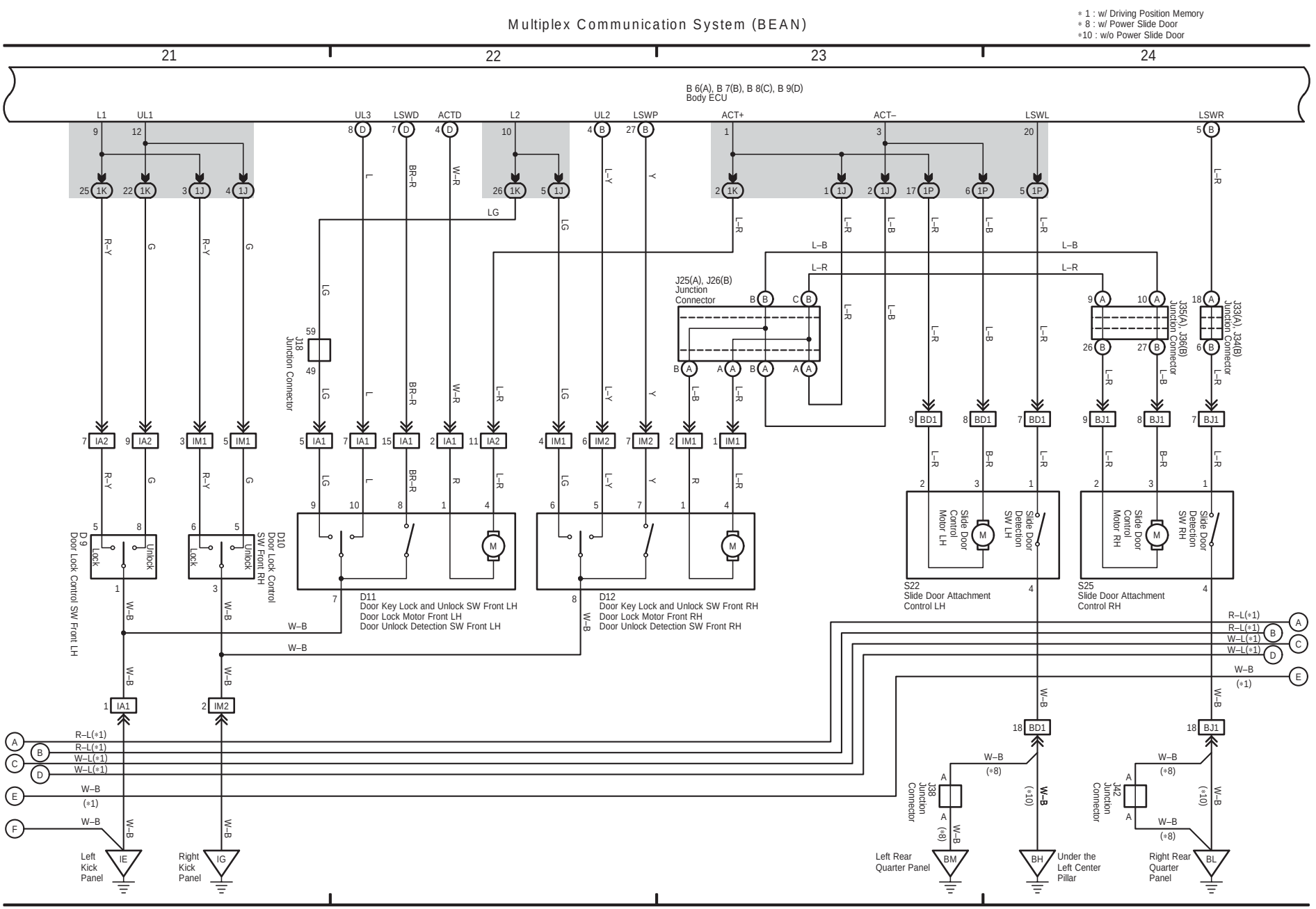

1 SIENNA (Cont' d)

(Cont. next page)

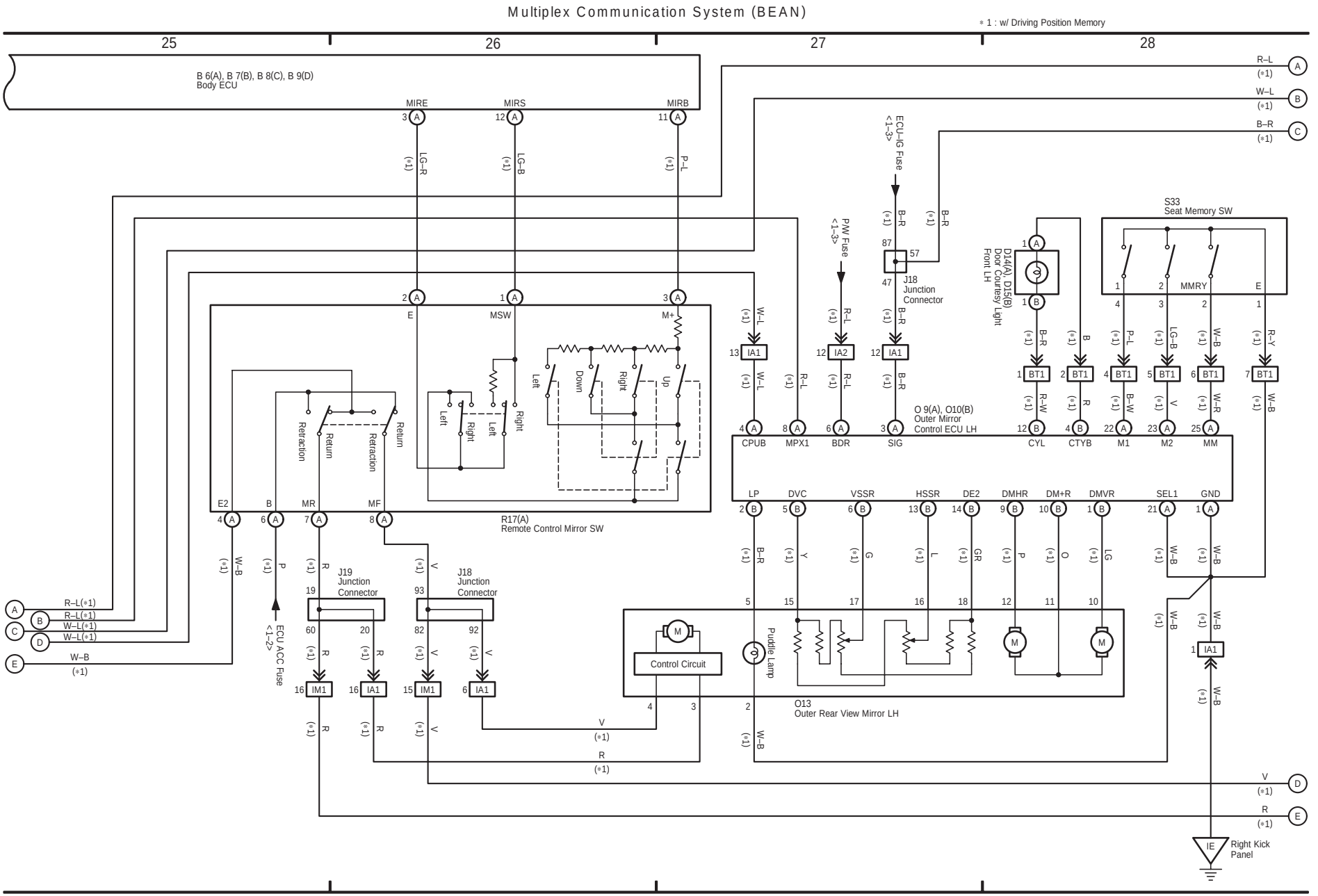

1 SIENNA (Cont' d)

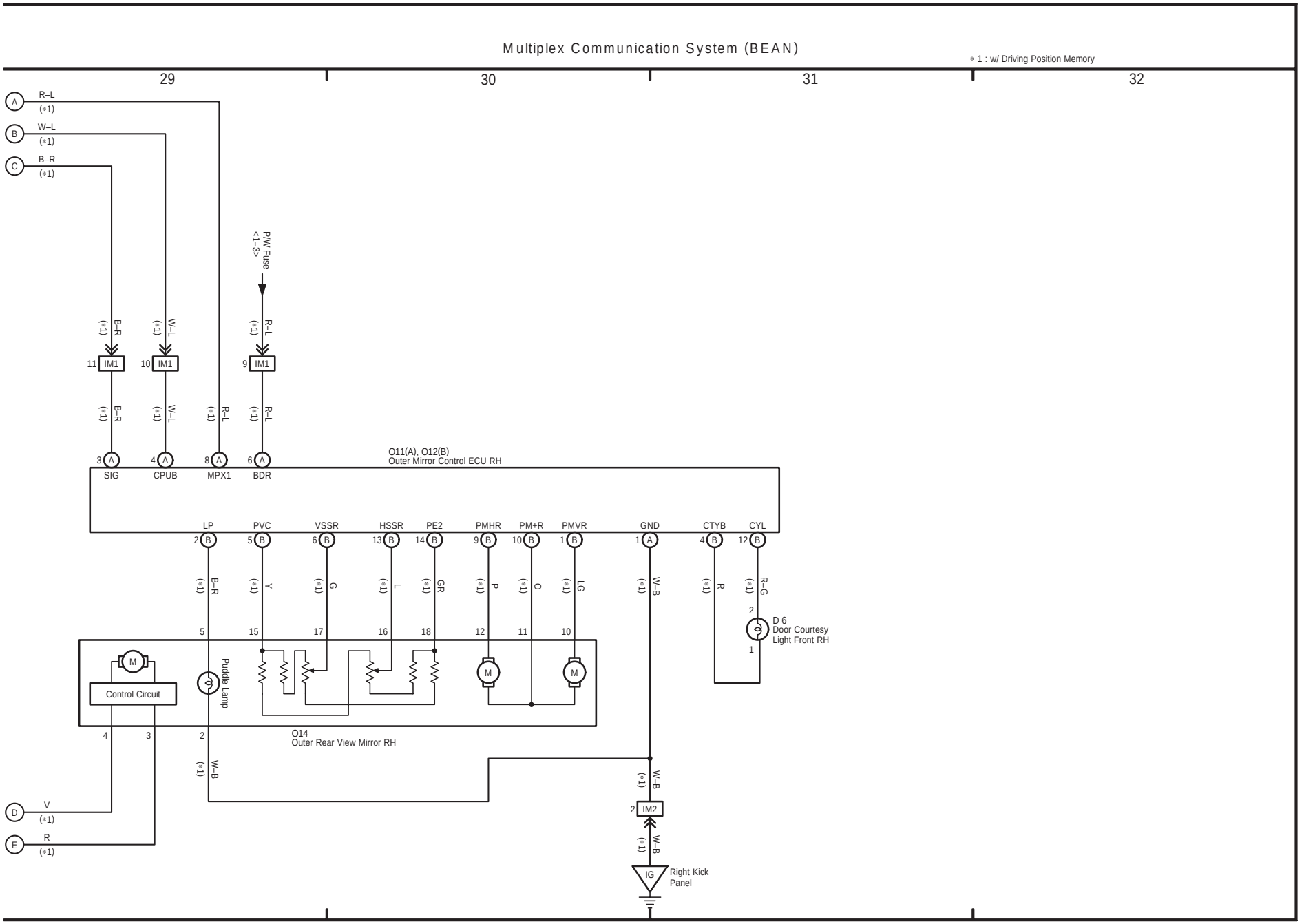

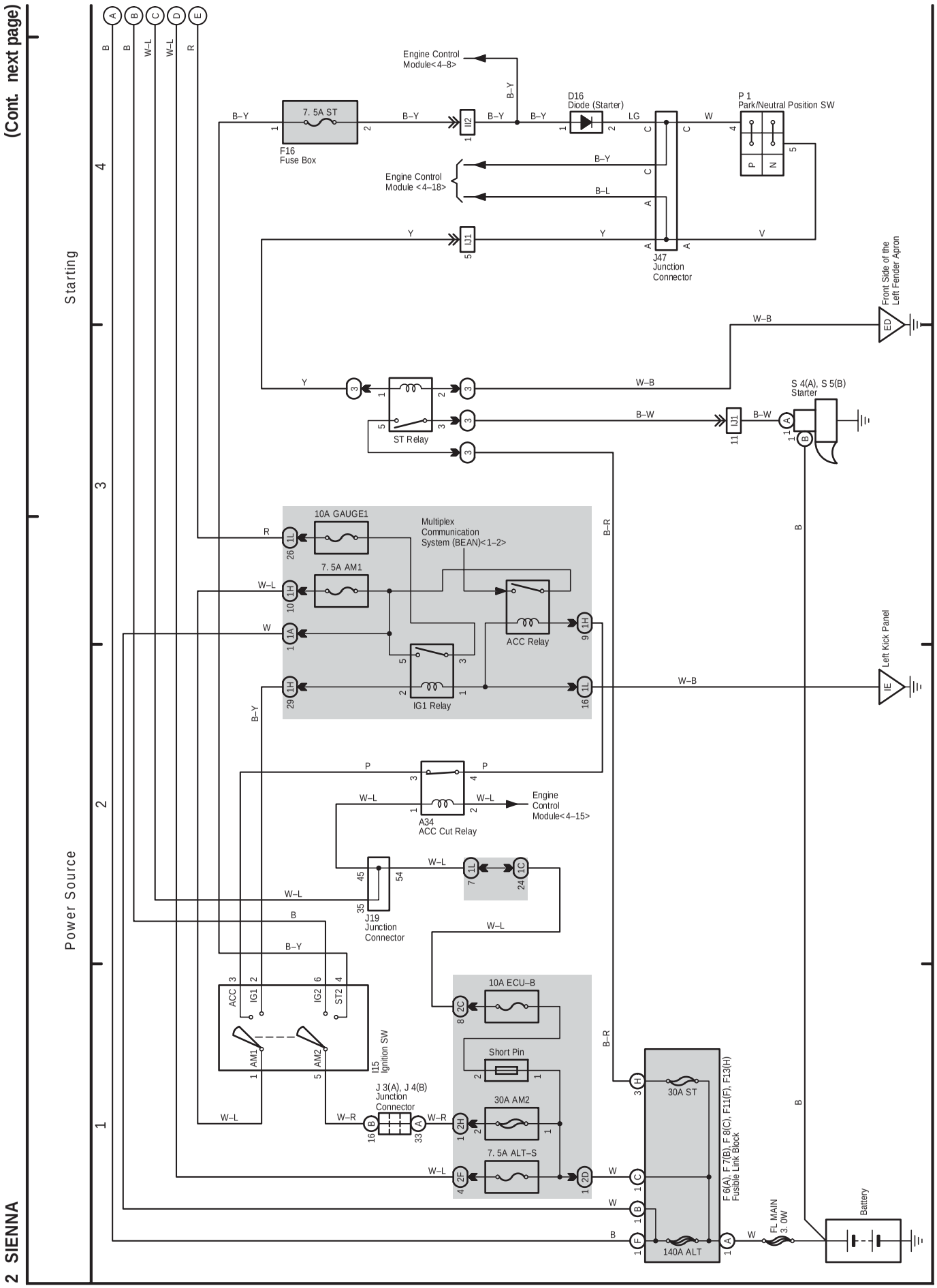
(Cont. next page)
Starting
Power Source
2 SIENNA
Engine Control Module<4–8>
D16 Diode (Starter)
P 1 Park/Neutral Position SW
7. 5A ST
F16 Fuse Box
Engine Control Module <4–18>
J47 Junction Connector
Front Side of the Left Fender Apron
S 4(A), S 5(B) Starter
ST Relay
10A GAUGE1
Multiplex Communication System (BEAN)<1–2>
7. 5A AM1
ACC Relay
IG1 Relay
Left Kick Panel
A34 ACC Cut Relay
Engine Control Module<4–15>
J19 Junction Connector
10A ECU–B
Short Pin
30A AM2
7. 5A ALT–S
I15 Ignition SW
J 3(A), J 4(B) Junction Connector
30A ST
F 6(A), F 7(B), F 8(C), F11(F), F13(H) Fusible Link Block
140A ALT
FL MAIN 3. 0W
Battery

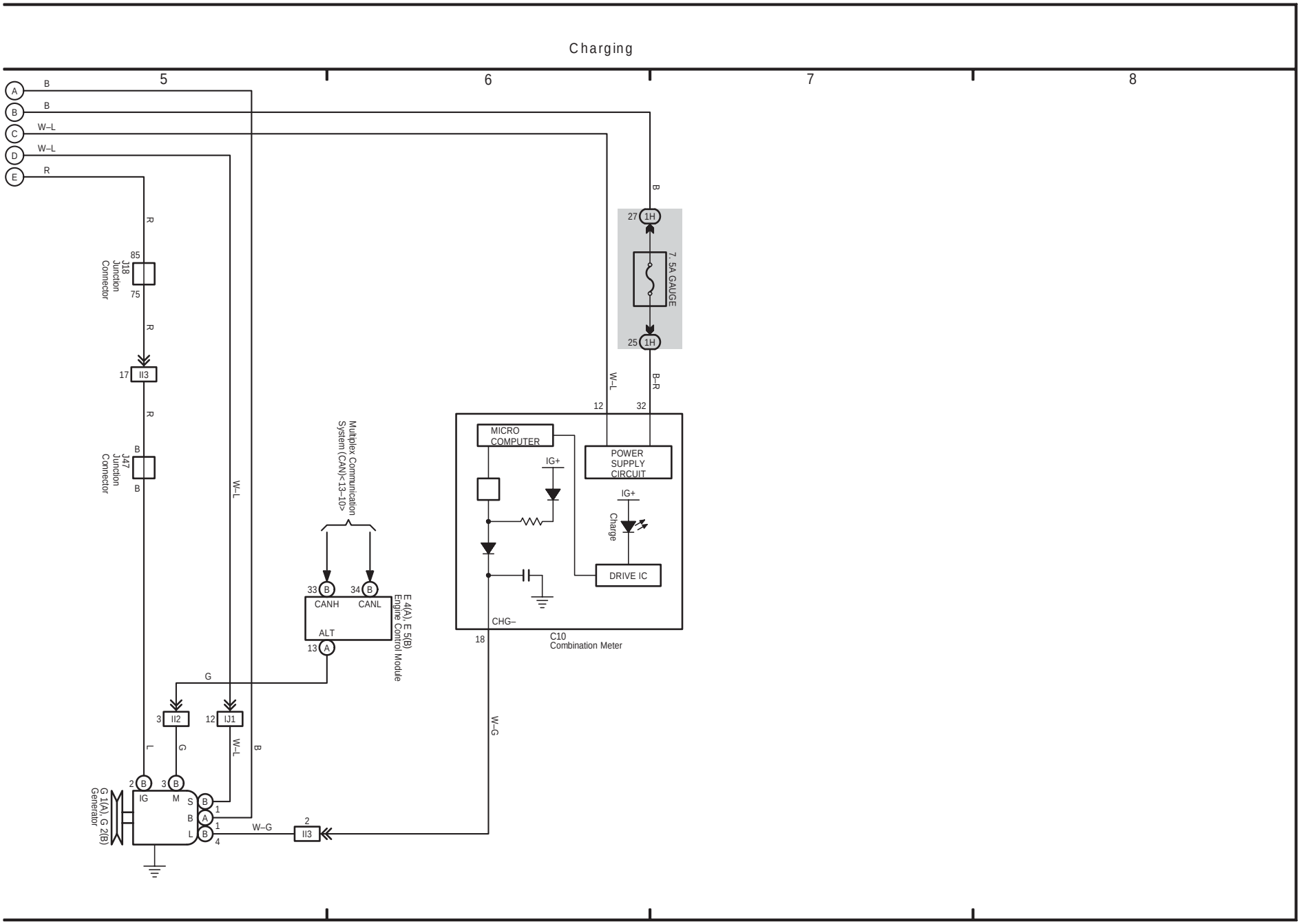
Charging
5
6
7
8
A
B
C
D
E
B
B
W–L
W–L
R
R
85
J18
Junction
Connector
75
R
17
II3
R
B
J47
Junction
Connector
B
W–L
G
3
II2
12
IJ1
L
G
W–L
B
2
B
IG
3
B
M
S
B
L
B
A
B
1
1
4
G 1(A), G 2(B)
Generator
W–G
2
II3
Multiplex Communication
System (CAN)<13–10>
33
B
CANH
34
B
CANL
ALT
13
A
E 4(A), E 5(B)
Engine Control Module
B
27
1H
7. 5A GAUGE
25
1H
W–L
B–R
12
32
MICRO
COMPUTER
IG+
POWER
SUPPLY
CIRCUIT
IG+
Charge
DRIVE IC
CHG–
18
C10
Combination Meter
W–G

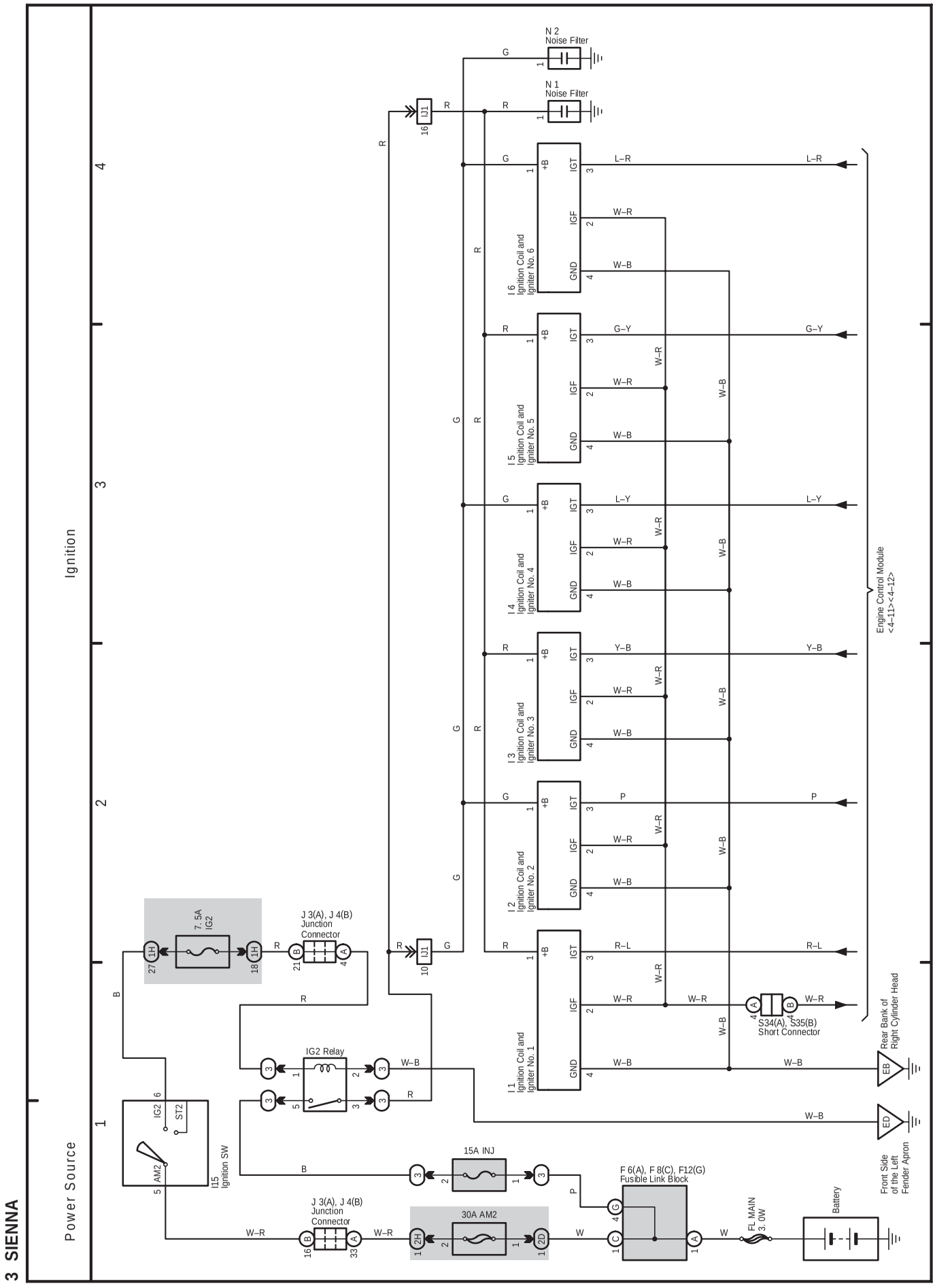
3 SIENNA
Power Source
Ignition
1
2
3
4
N 2
Noise Filter
N 1
Noise Filter
I 6
Ignition Coil and
Igniter No. 6
I 5
Ignition Coil and
Igniter No. 5
I 4
Ignition Coil and
Igniter No. 4
I 3
Ignition Coil and
Igniter No. 3
I 2
Ignition Coil and
Igniter No. 2
I 1
Ignition Coil and
Igniter No. 1
+B
IGT
IGF
GND
Engine Control Module
<4-11><4-12>
S34(A), S35(B)
Short Connector
Rear Bank of
Right Cylinder Head
Front Side
of the Left
Fender Apron
7. 5A
IG2
J 3(A), J 4(B)
Junction
Connector
IG2 Relay
15A INJ
30A AM2
F 6(A), F 8(C), F12(G)
Fusible Link Block
FL MAIN
3. 0W
Battery
I15
Ignition SW
IG2
ST2
AM2

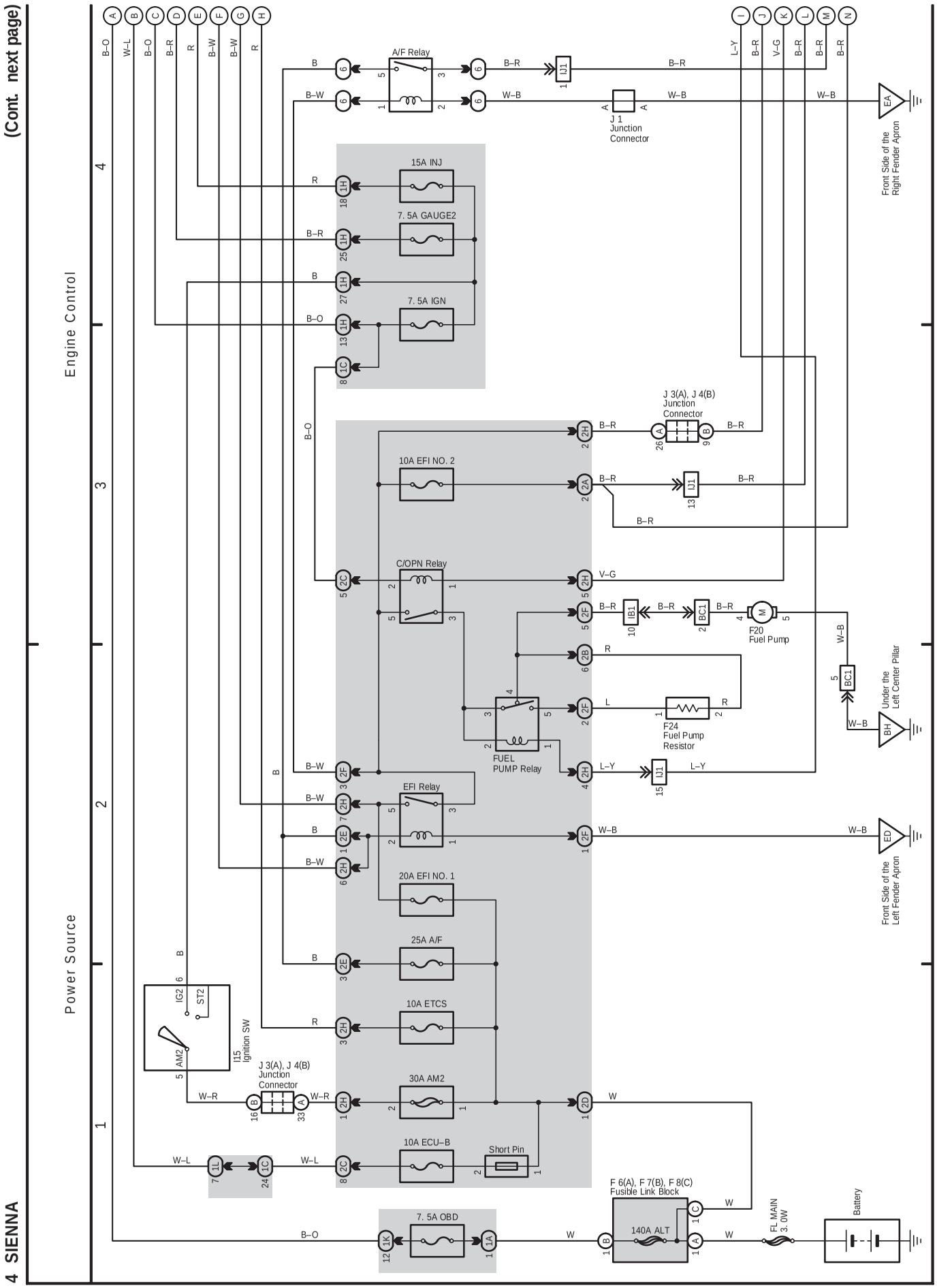
(Cont. next page)
Engine Control
Power Source
4 SIENNA
A/F Relay
J 1
Junction
Connector
Front Side of the
Right Fender Apron
15A INJ
7. 5A GAUGE2
7. 5A IGN
J 3(A), J 4(B)
Junction
Connector
10A EFI NO. 2
C/OPN Relay
F20
Fuel Pump
F24
Fuel Pump
Resistor
FUEL
PUMP Relay
Under the
Left Center Pillar
EFI Relay
Front Side of the
Left Fender Apron
20A EFI NO. 1
25A A/F
10A ETCS
I15
Ignition SW
30A AM2
10A ECU–B
Short Pin
7. 5A OBD
F 6(A), F 7(B), F 8(C)
Fusible Link Block
140A ALT
FL MAIN
3. 0W
Battery

(Cont. next page)

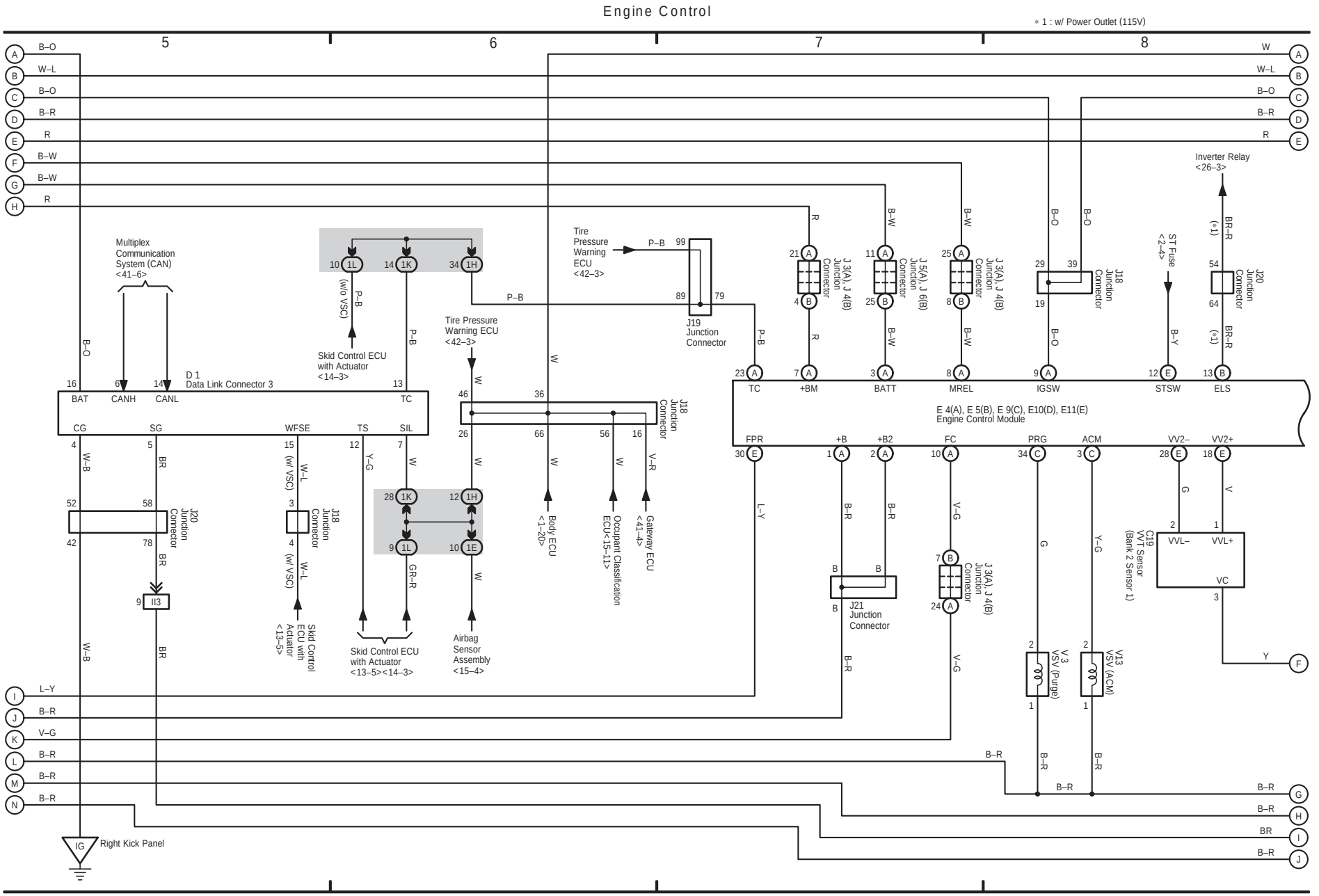

4 SIENNA (Cont' d)

(Cont. next page)

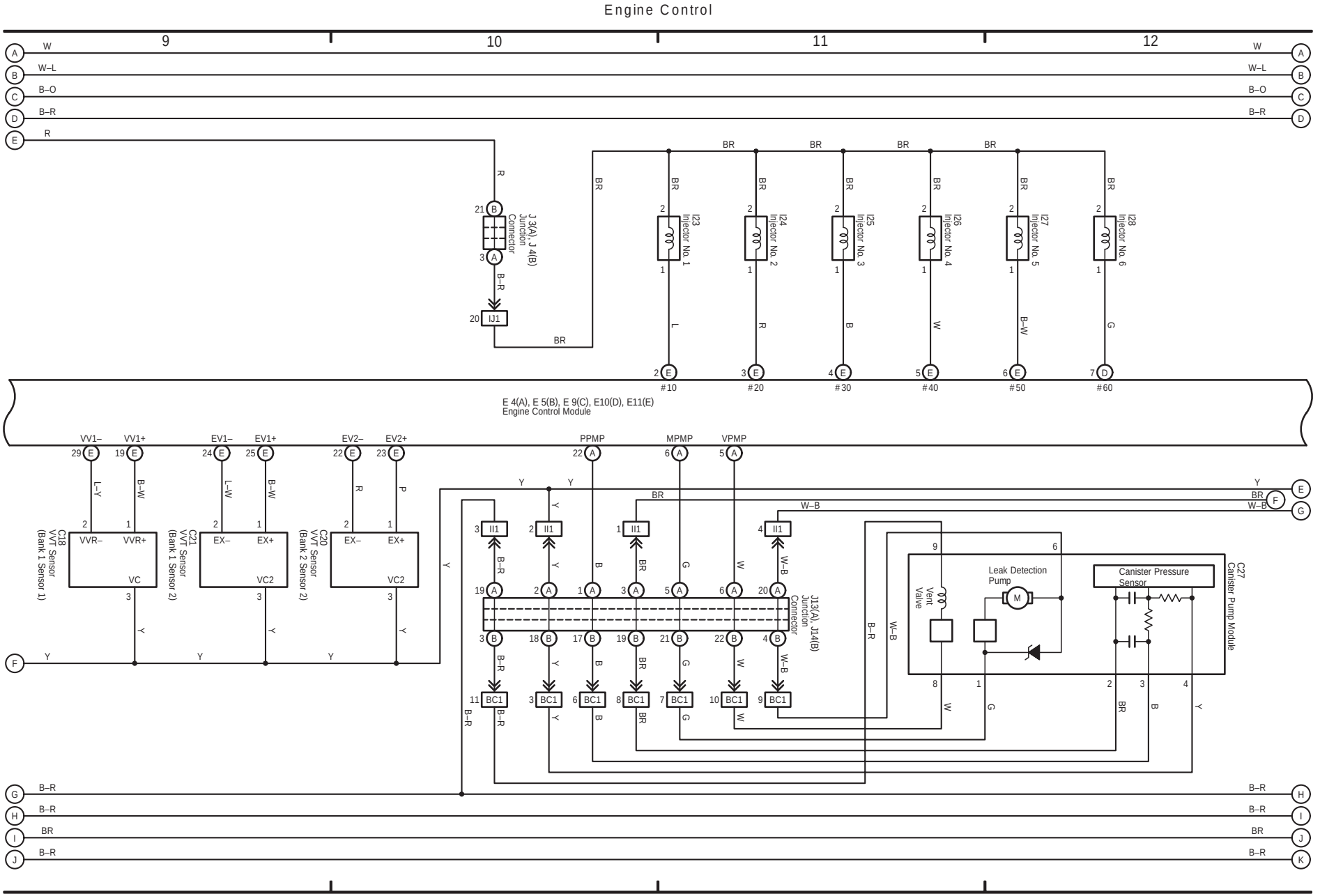

(Cont. next page)

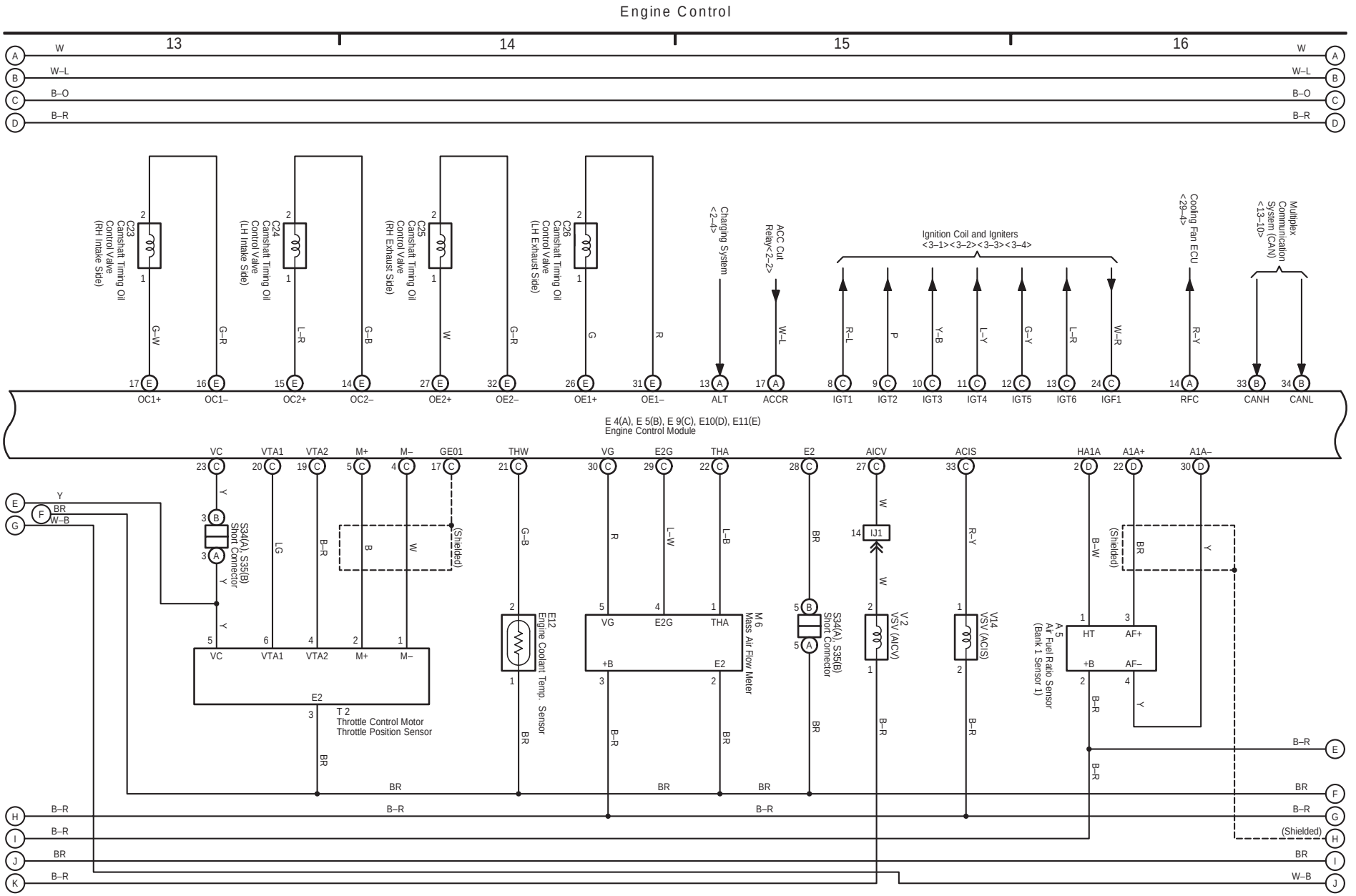

4 SIENNA (Cont' d)

(Cont. next page)

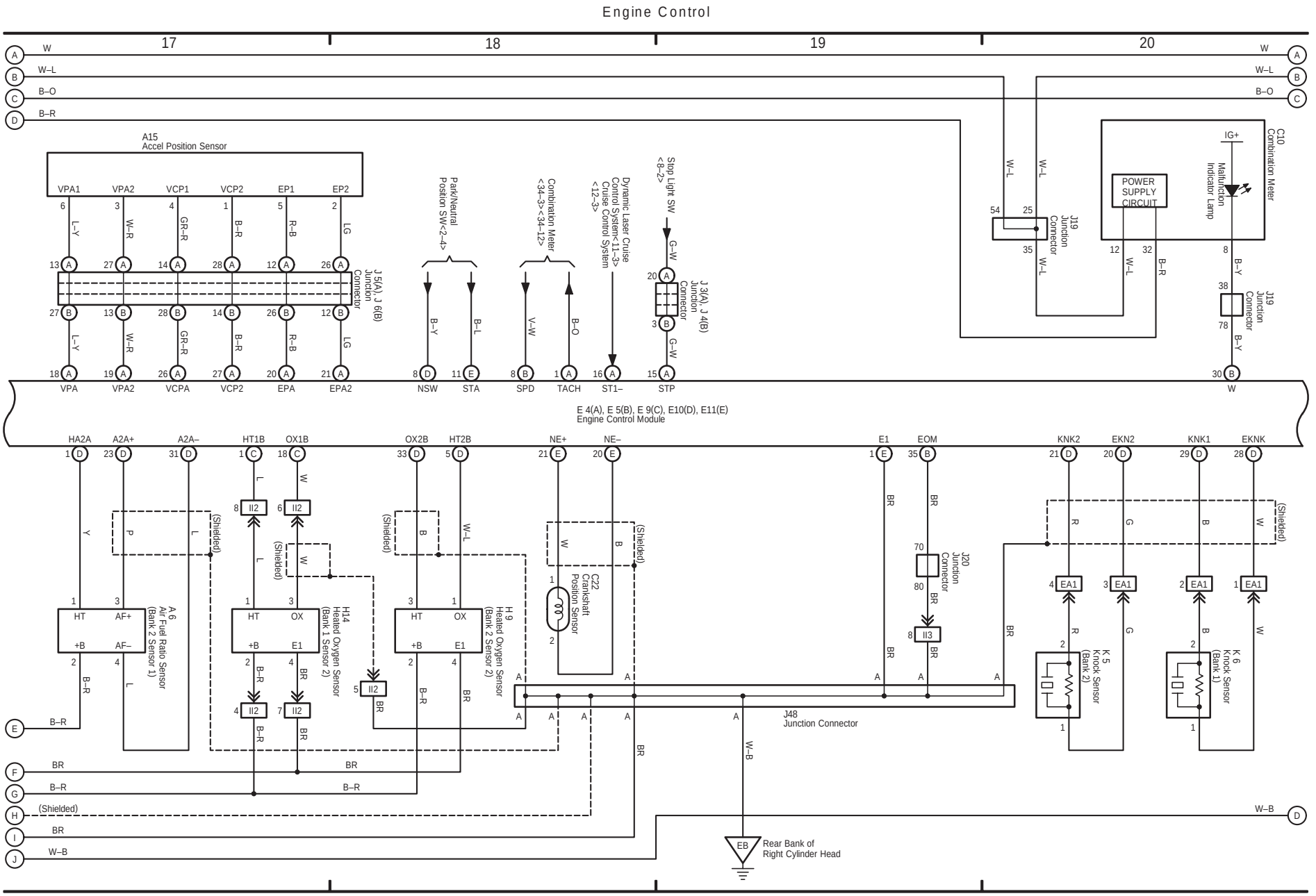

4 SIENNA (Cont' d)

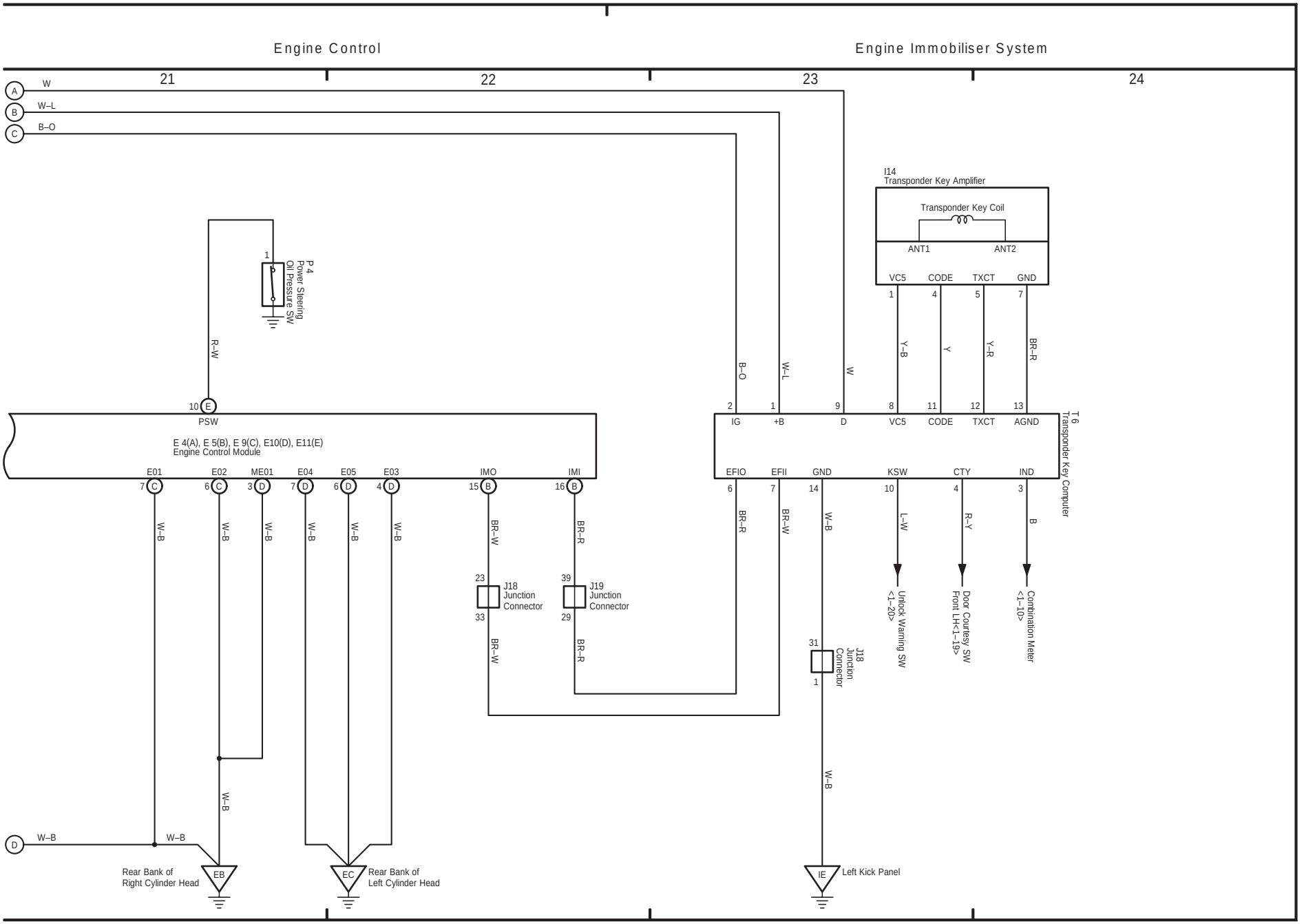

5 SIENNA

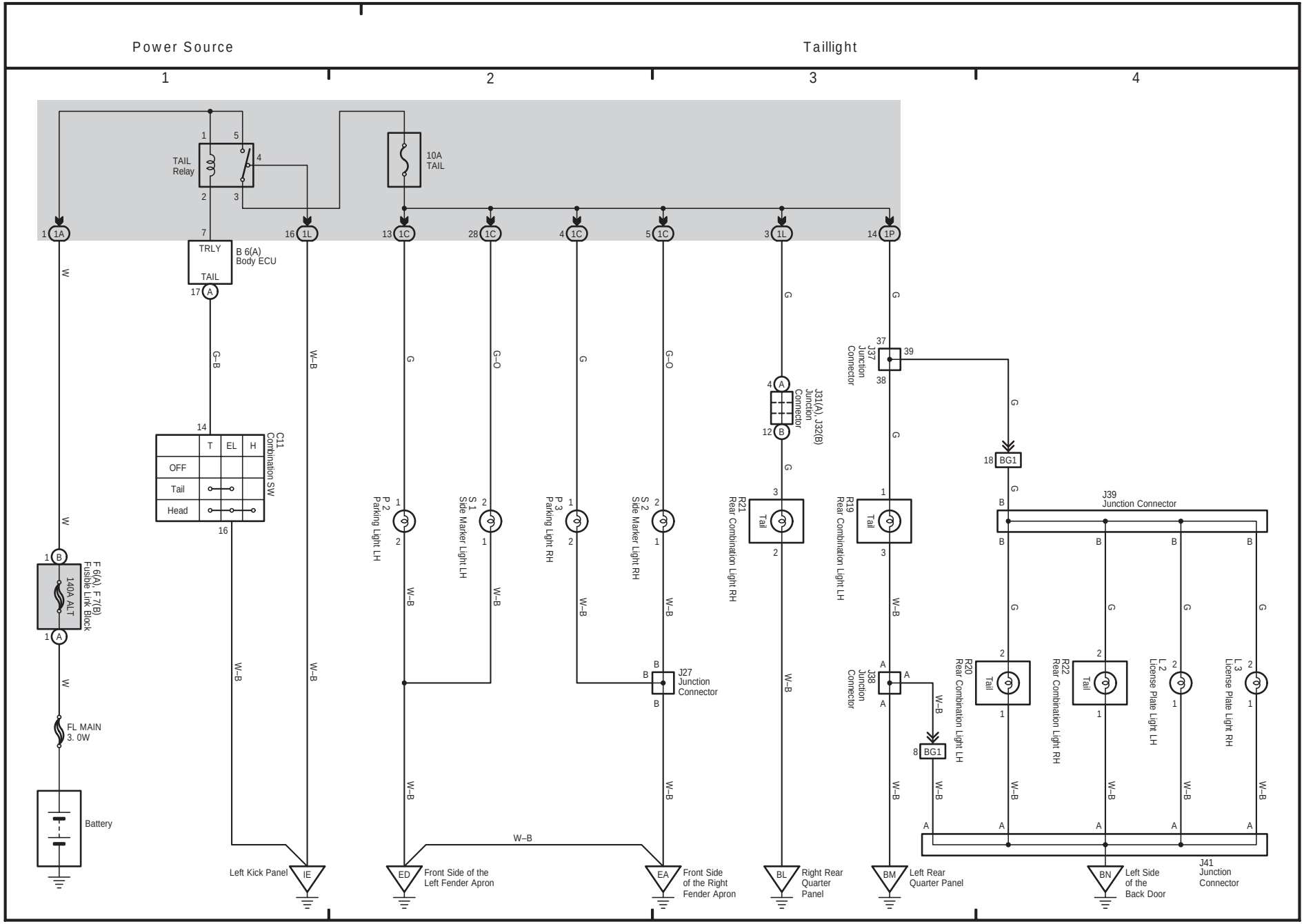
Power Source
Taillight
1
2
3
4
TAIL Relay
10A TAIL
TRLY
TAIL
B 6(A) Body ECU
C11 Combination SW
T
EL
H
OFF
Tail
Head
F 6(A), F 7(B) Fusible Link Block
140A ALT
FL MAIN 3. 0W
Battery
P 2 Parking Light LH
S 1 Side Marker Light LH
P 3 Parking Light RH
S 2 Side Marker Light RH
J27 Junction Connector
J31(A), J32(B) Junction Connector
R21 Rear Combination Light RH
R19 Rear Combination Light LH
J37 Junction Connector
J38 Junction Connector
J39 Junction Connector
R20 Rear Combination Light LH
R22 Rear Combination Light RH
L 2 License Plate Light LH
L 3 License Plate Light RH
J41 Junction Connector
Left Kick Panel
Front Side of the Left Fender Apron
Front Side of the Right Fender Apron
Right Rear Quarter Panel
Left Rear Quarter Panel
Left Side of the Back Door

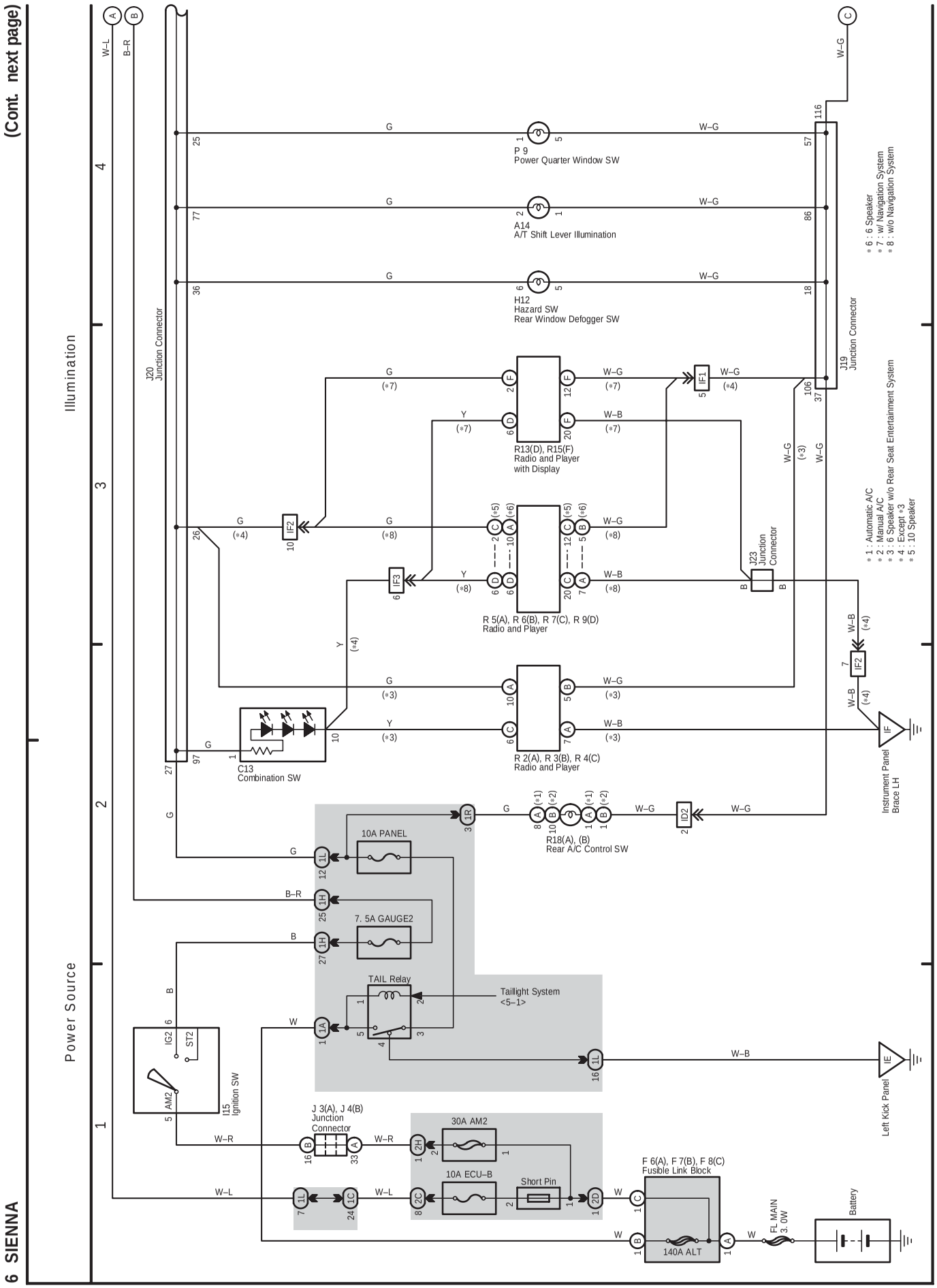
(Cont. next page)
6 SIENNA
Illumination
Power Source
P 9
Power Quarter Window SW
A14
A/T Shift Lever Illumination
H12
Hazard SW
Rear Window Defogger SW
J20
Junction Connector
J19
Junction Connector
R13(D), R15(F)
Radio and Player
with Display
R 5(A), R 6(B), R 7(C), R 9(D)
Radio and Player
R 2(A), R 3(B), R 4(C)
Radio and Player
C13
Combination SW
R18(A), (B)
Rear A/C Control SW
J23
Junction
Connector
Instrument Panel
Brace LH
Left Kick Panel
10A PANEL
7. 5A GAUGE2
TAIL Relay
Taillight System
<5–1>
I15
Ignition SW
J 3(A), J 4(B)
Junction
Connector
30A AM2
10A ECU–B
Short Pin
F 6(A), F 7(B), F 8(C)
Fusible Link Block
140A ALT
FL MAIN
3. 0W
Battery
* 1 : Automatic A/C
* 2 : Manual A/C
* 3 : 6 Speaker w/o Rear Seat Entertainment System
* 4 : Except *3
* 5 : 10 Speaker
* 6 : 6 Speaker
* 7 : w/ Navigation System
* 8 : w/o Navigation System

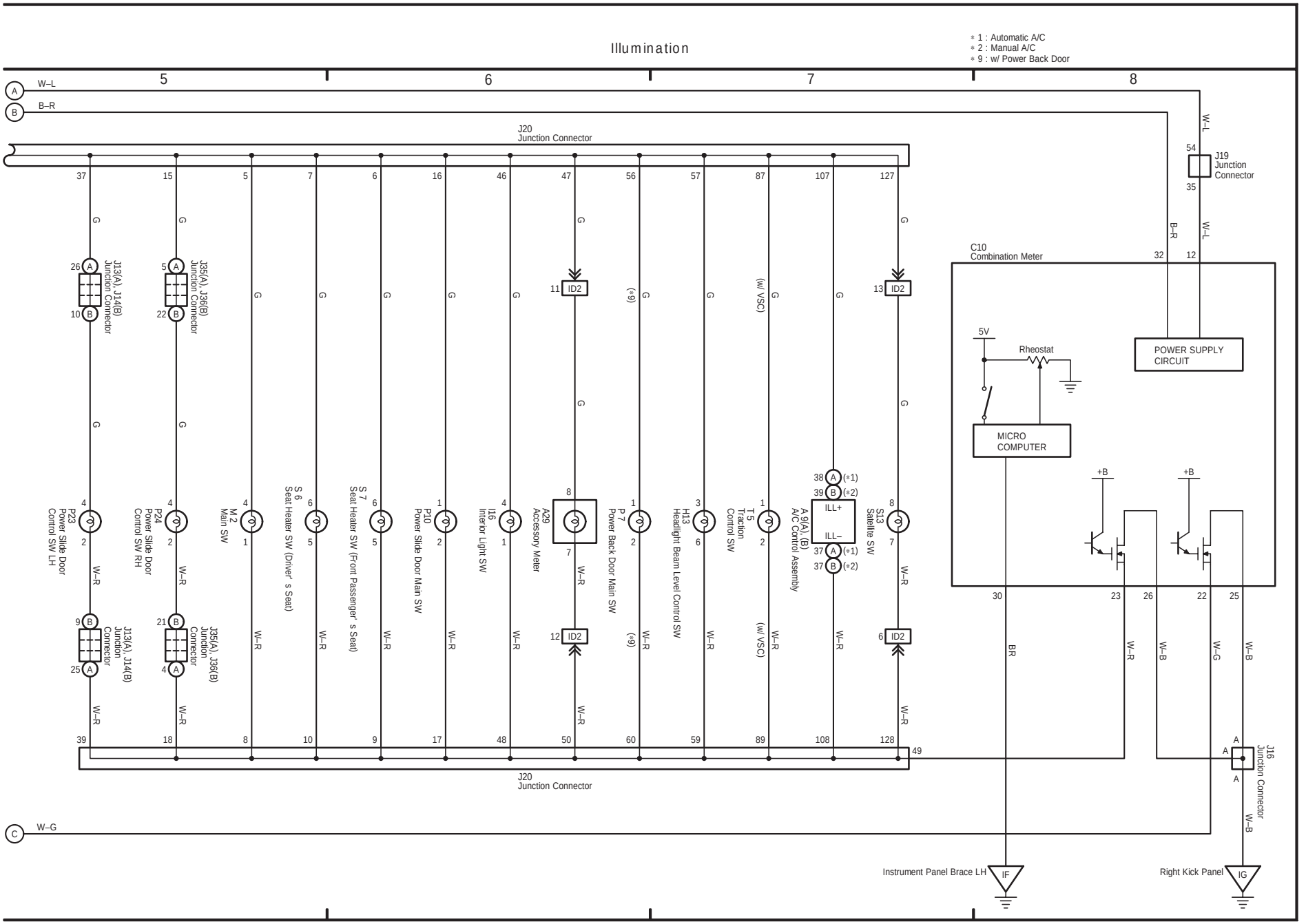
Illumination
* 1 : Automatic A/C
* 2 : Manual A/C
* 9 : w/ Power Back Door
5
6
7
8
W–L
B–R
W–G
J20
Junction Connector
J19
Junction Connector
C10
Combination Meter
POWER SUPPLY
CIRCUIT
5V
Rheostat
MICRO
COMPUTER
+B
J13(A), J14(B)
Junction Connector
J35(A), J36(B)
Junction Connector
P23
Power Slide Door
Control SW LH
P24
Power Slide Door
Control SW RH
M 2
Main SW
S 6
Seat Heater SW (Driver' s Seat)
S 7
Seat Heater SW (Front Passenger' s Seat)
P10
Power Slide Door Main SW
I16
Interior Light SW
A29
Accessory Meter
P 7
Power Back Door Main SW
H13
Headlight Beam Level Control SW
T 5
Traction
Control SW
A 9(A), (B)
A/C Control Assembly
ILL+
ILL–
S13
Satellite SW
ID2
(*9)
(w/ VSC)
J16
Junction Connector
Instrument Panel Brace LH
IF
Right Kick Panel
IG

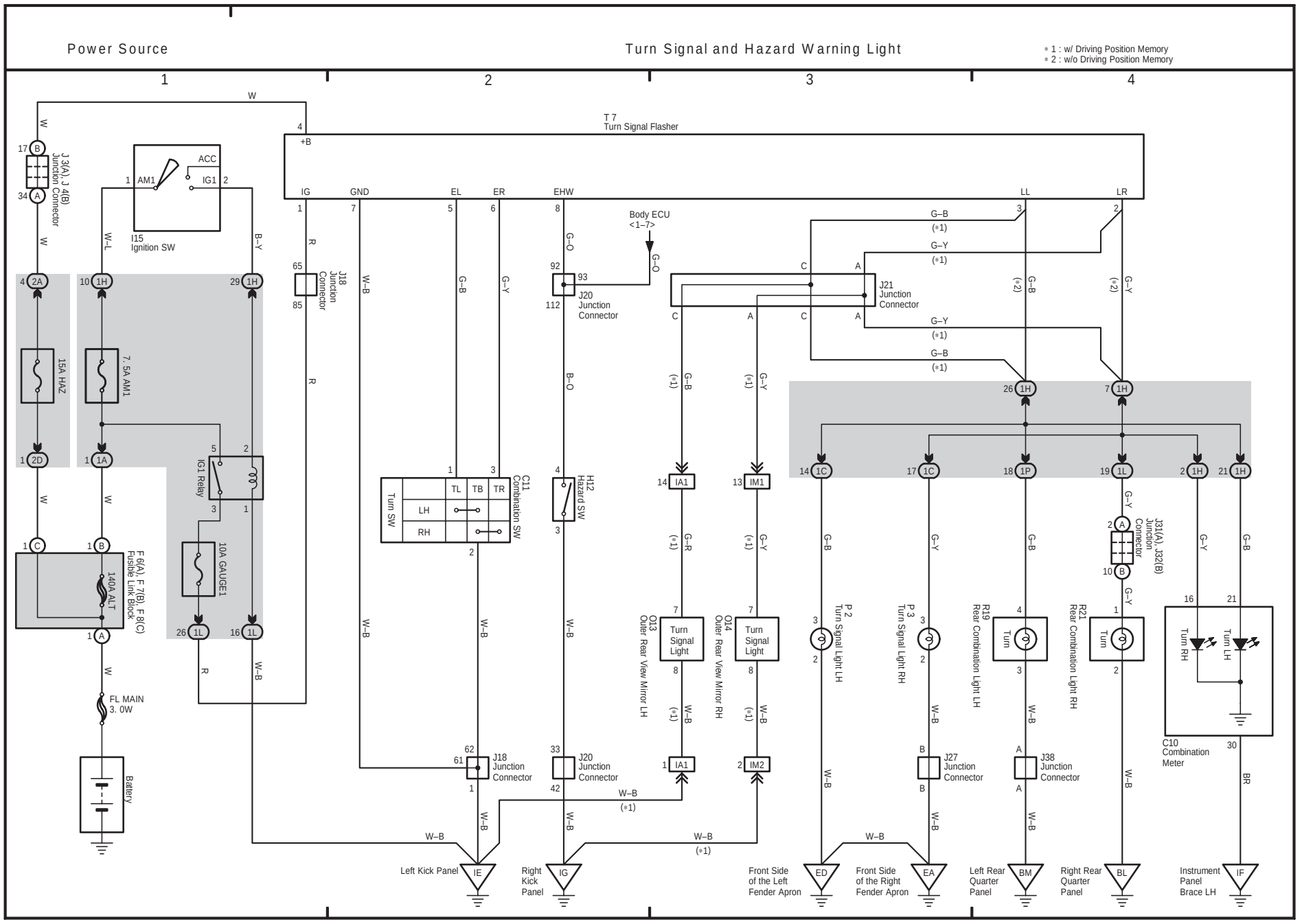
Power Source
Turn Signal and Hazard Warning Light
∗1 : w/ Driving Position Memory
∗2 : w/o Driving Position Memory
T 7
Turn Signal Flasher
+B
IG
GND
EL
ER
EHW
LL
LR
Body ECU
<1–7>
J 3(A), J 4(B)
Junction Connector
I15
Ignition SW
ACC
AM1
IG1
15A HAZ
7. 5A AM1
IG1 Relay
10A GAUGE1
F 6(A), F 7(B), F 8(C)
Fusible Link Block
140A ALT
FL MAIN
3. 0W
Battery
J18
Junction
Connector
J20
Junction
Connector
J21
Junction
Connector
C11
Combination SW
Turn SW
TL
TB
TR
LH
RH
H12
Hazard SW
O13
Outer Rear View Mirror LH
O14
Outer Rear View Mirror RH
Turn
Signal
Light
P 2
Turn Signal Light LH
P 3
Turn Signal Light RH
R19
Rear Combination Light LH
R21
Rear Combination Light RH
J31(A), J32(B)
Junction
Connector
C10
Combination
Meter
Turn RH
Turn LH
J27
Junction
Connector
J38
Junction
Connector
Left Kick Panel
Right
Kick
Panel
Front Side
of the Left
Fender Apron
Front Side
of the Right
Fender Apron
Left Rear
Quarter
Panel
Right Rear
Quarter
Panel
Instrument
Panel
Brace LH
W–B
(∗1)
(∗2)

8 SIENNA

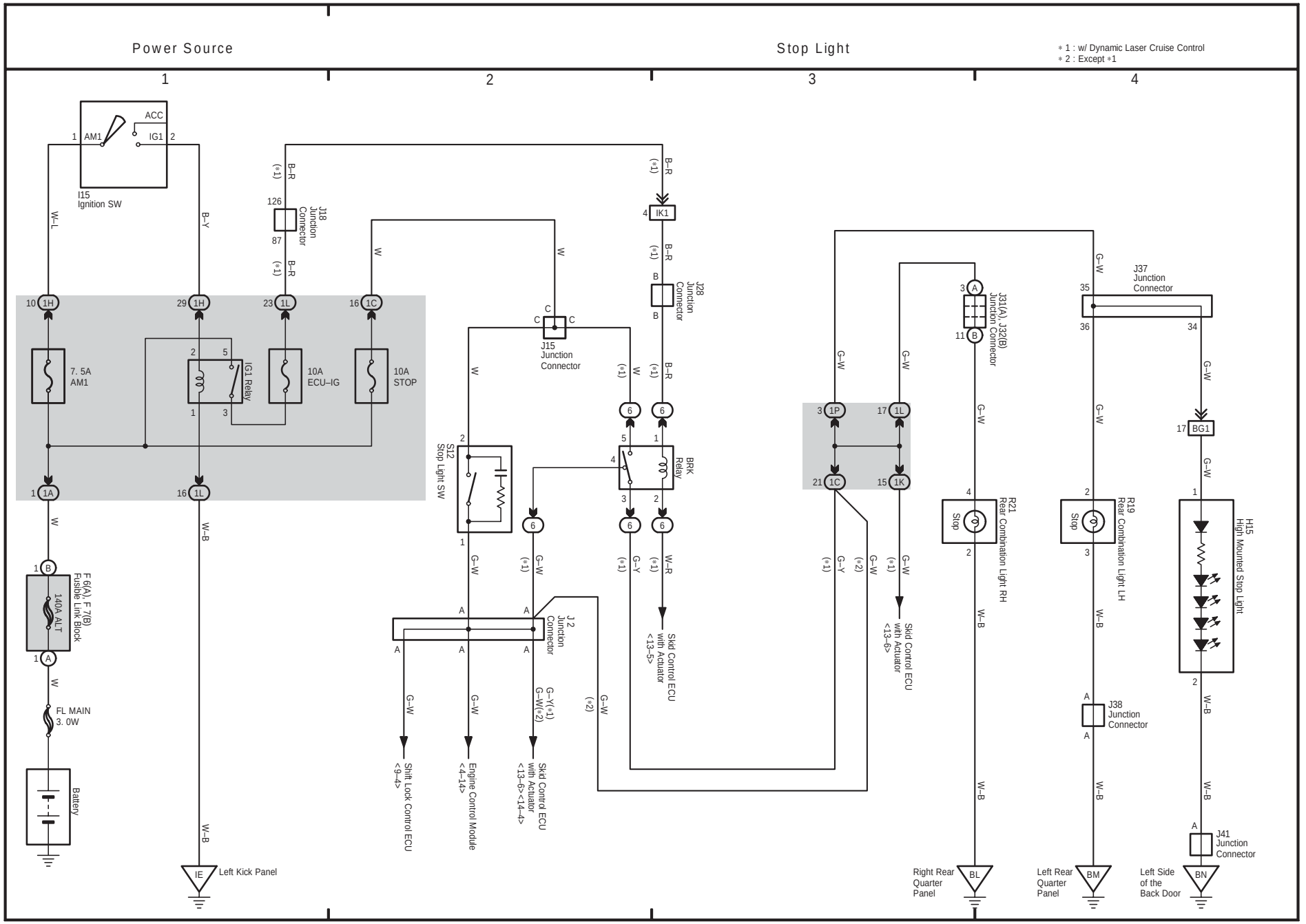
Power Source
Stop Light
* 1 : w/ Dynamic Laser Cruise Control
* 2 : Except *1
1
2
3
4
I15
Ignition SW
ACC
AM1
IG1
J18
Junction
Connector
IK1
J28
Junction
Connector
J15
Junction
Connector
7. 5A
AM1
IG1 Relay
10A
ECU–IG
10A
STOP
S12
Stop Light SW
BRK
Relay
J 2
Junction
Connector
F 6(A), F 7(B)
Fusible Link Block
140A ALT
FL MAIN
3. 0W
Battery
Left Kick Panel
IE
Shift Lock Control ECU
<9–4>
Engine Control Module
<4–14>
Skid Control ECU
with Actuator
<13–6><14–4>
Skid Control ECU
with Actuator
<13–5>
J31(A), J32(B)
Junction Connector
R21
Rear Combination Light RH
Stop
Right Rear
Quarter
Panel
BL
J37
Junction
Connector
R19
Rear Combination Light LH
Stop
J38
Junction
Connector
Left Rear
Quarter
Panel
BM
BG1
H15
High Mounted Stop Light
J41
Junction
Connector
Left Side
of the
Back Door
BN

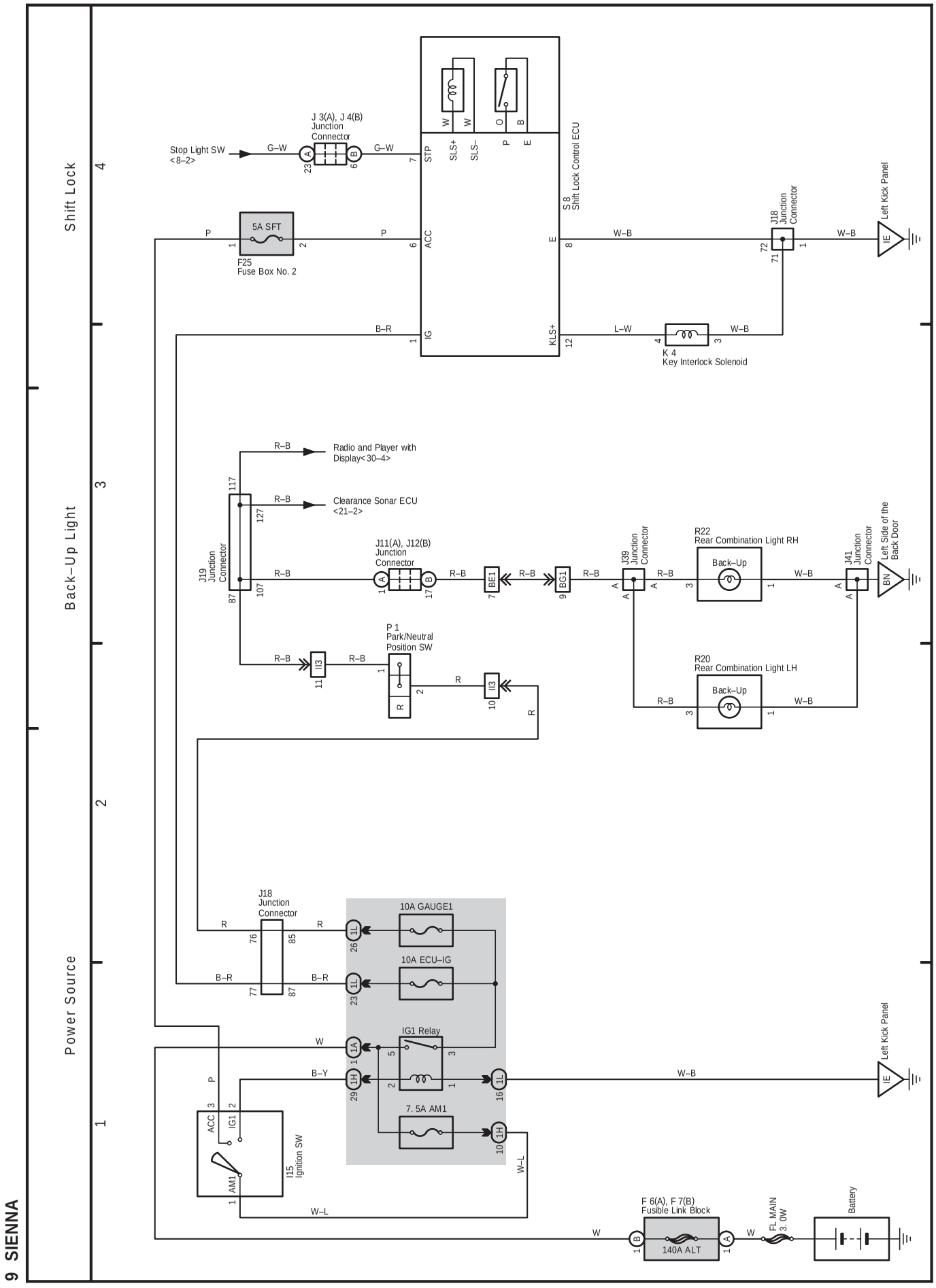
Shift Lock
Back–Up Light
Power Source
Stop Light SW
<8–2>
J 3(A), J 4(B)
Junction
Connector
S 8
Shift Lock Control ECU
5A SFT
F25
Fuse Box No. 2
J18
Junction
Connector
Left Kick Panel
K 4
Key Interlock Solenoid
Radio and Player with
Display<30–4>
Clearance Sonar ECU
<21–2>
J19
Junction
Connector
J11(A), J12(B)
Junction
Connector
J39
Junction
Connector
R22
Rear Combination Light RH
Back–Up
J41
Junction
Connector
Left Side of the
Back Door
P 1
Park/Neutral
Position SW
R20
Rear Combination Light LH
10A GAUGE1
10A ECU–IG
IG1 Relay
7. 5A AM1
I15
Ignition SW
F 6(A), F 7(B)
Fusible Link Block
140A ALT
FL MAIN
3. 0W
Battery

10 SIENNA

(Cont. next page)

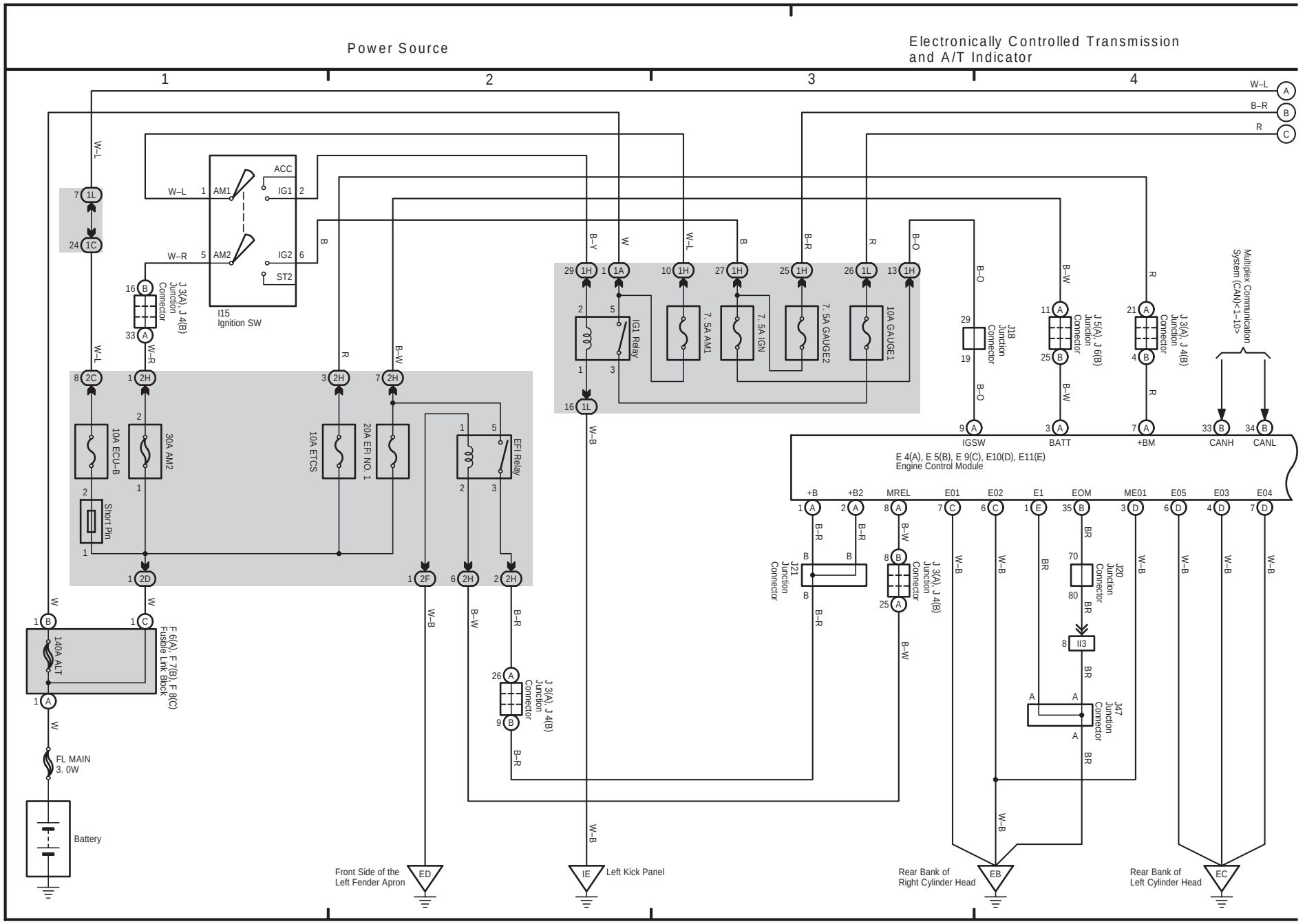

(Cont. next page)

Electronically Controlled Transmission and A/T Indicator

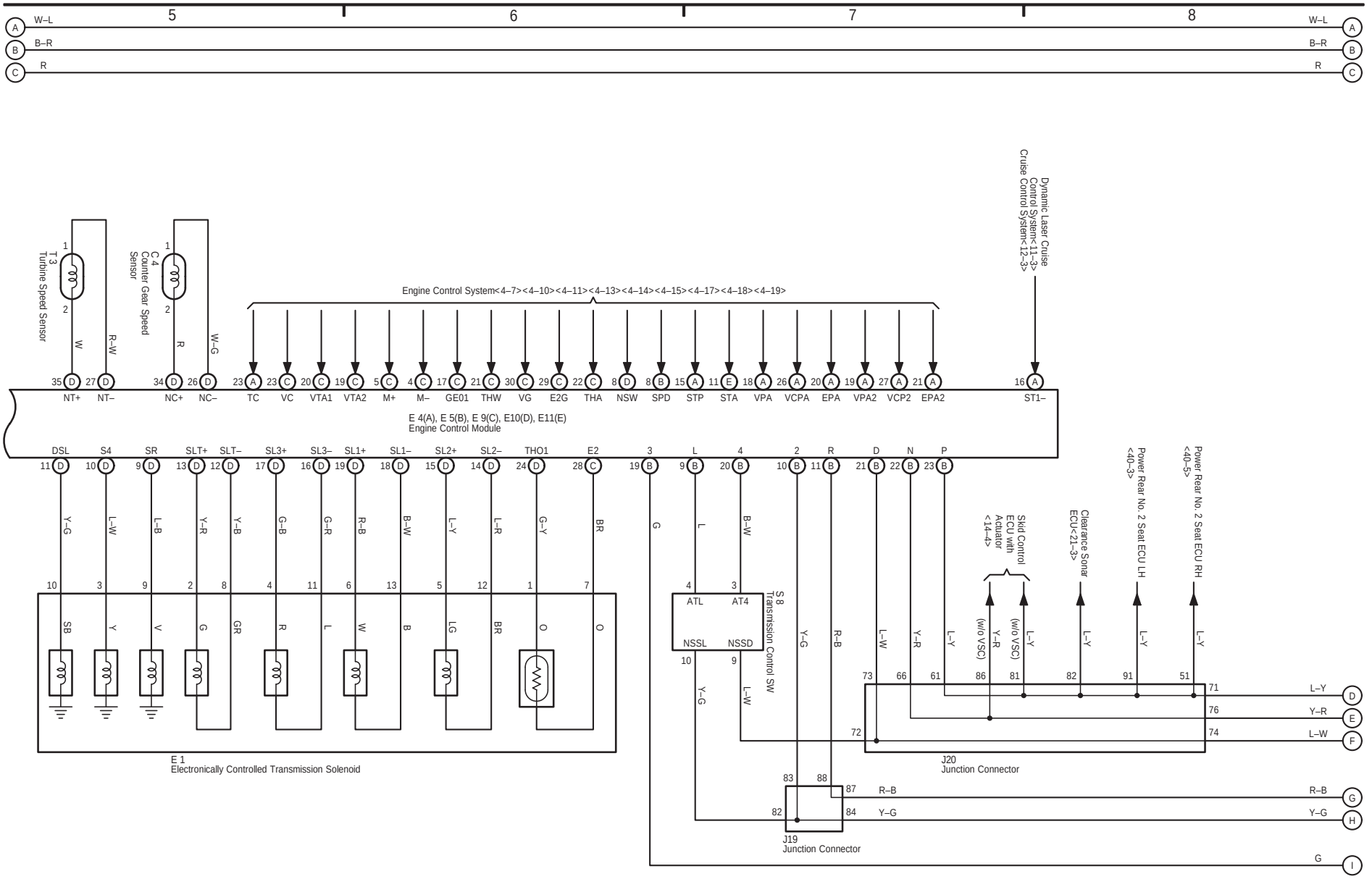

10 SIENNA (Cont' d)

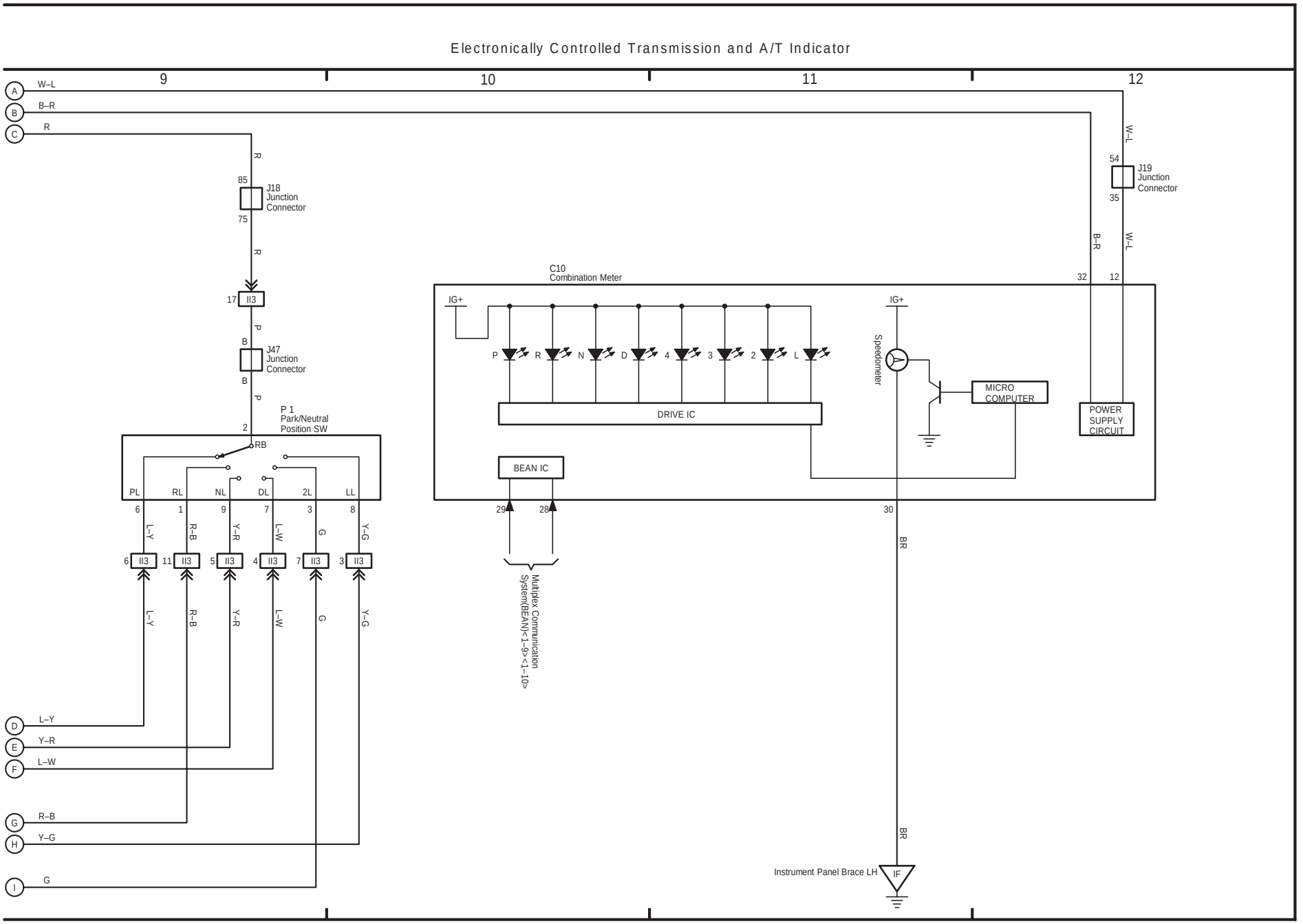

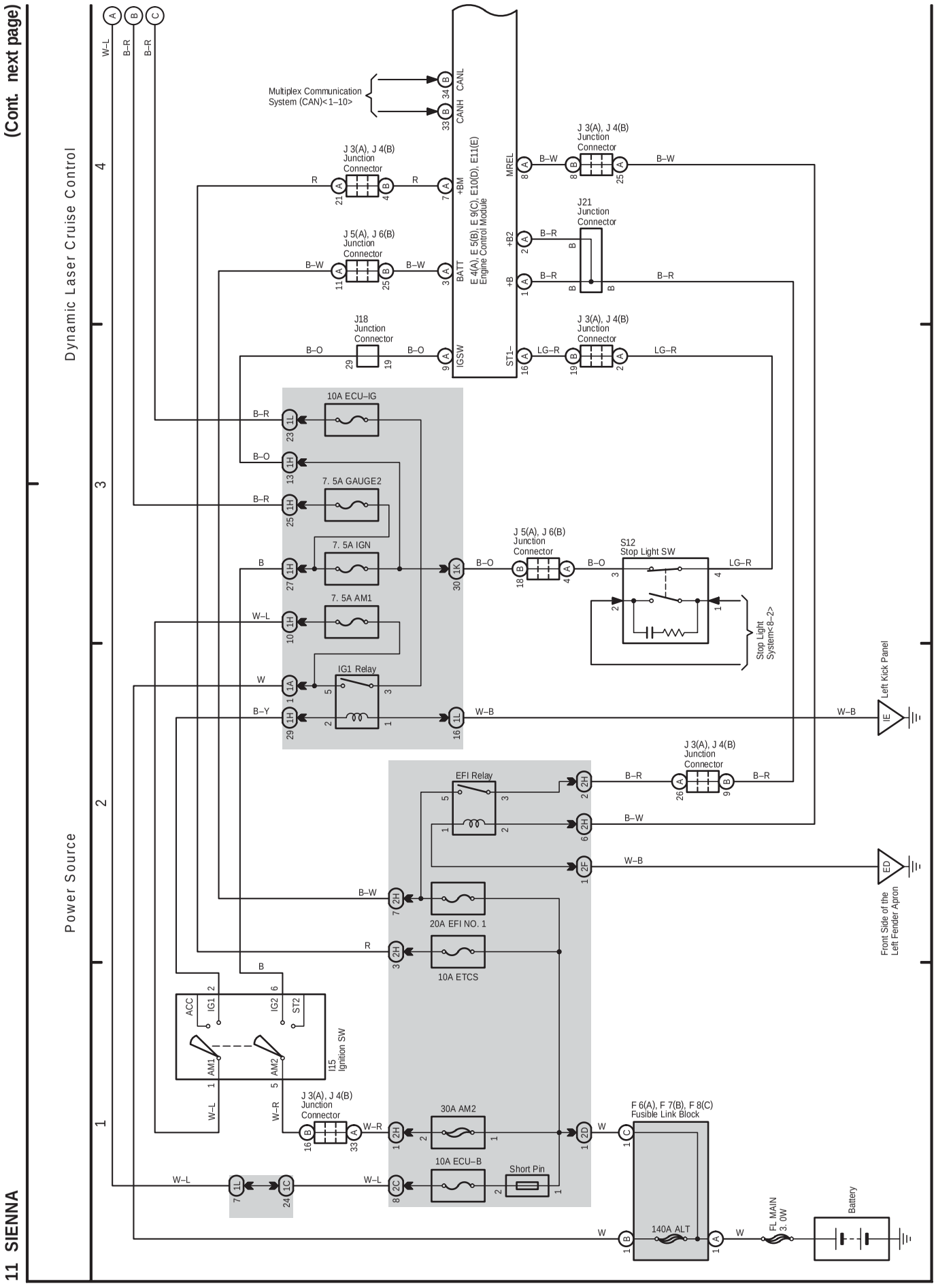
(Cont. next page)
Dynamic Laser Cruise Control
Power Source
11 SIENNA
Multiplex Communication System (CAN)<1–10>
CANH
CANL
E 4(A), E 5(B), E 9(C), E10(D), E11(E) Engine Control Module
+BM
BATT
IGSW
MREL
+B2
+B
ST1–
J 3(A), J 4(B) Junction Connector
J 5(A), J 6(B) Junction Connector
J21 Junction Connector
J18 Junction Connector
10A ECU–IG
7. 5A GAUGE2
7. 5A IGN
7. 5A AM1
IG1 Relay
S12 Stop Light SW
Stop Light System<8–2>
Left Kick Panel
Front Side of the Left Fender Apron
EFI Relay
20A EFI NO. 1
10A ETCS
30A AM2
10A ECU–B
Short Pin
I15 Ignition SW
ACC
IG1
IG2
ST2
AM1
AM2
F 6(A), F 7(B), F 8(C) Fusible Link Block
140A ALT
FL MAIN 3. 0W
Battery

(Cont. next page)

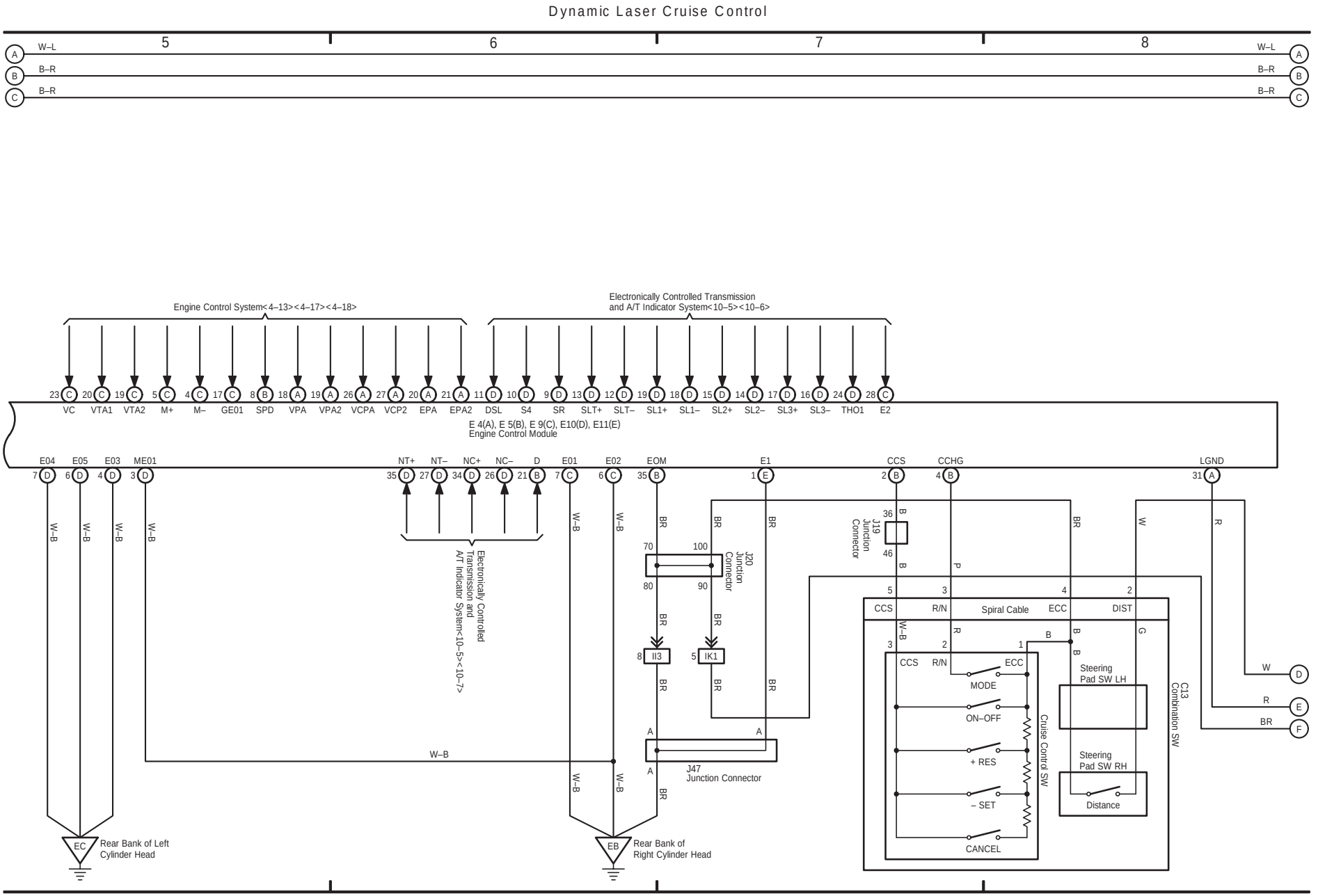

11 SIENNA (Cont' d)

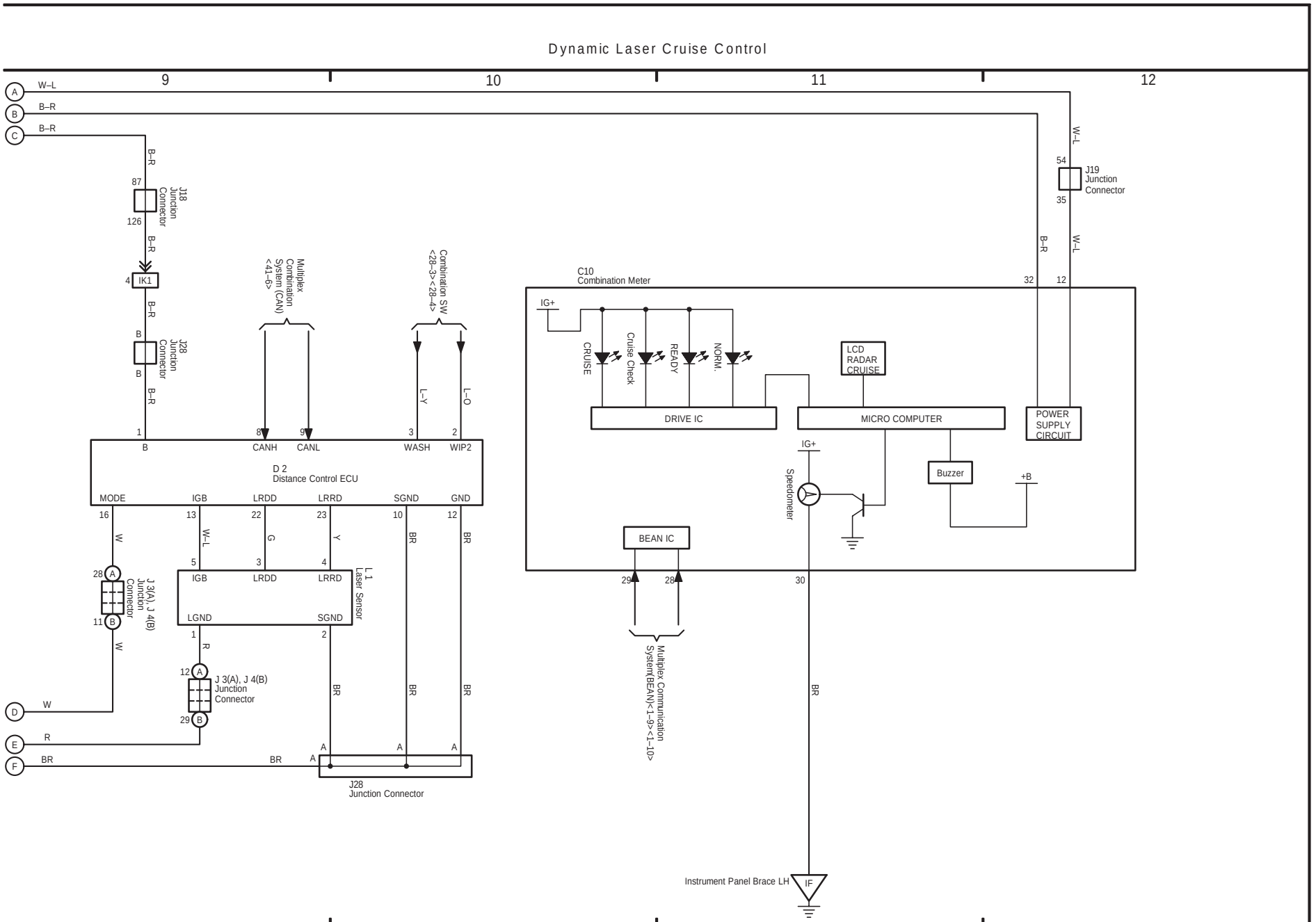

(Cont. next page)

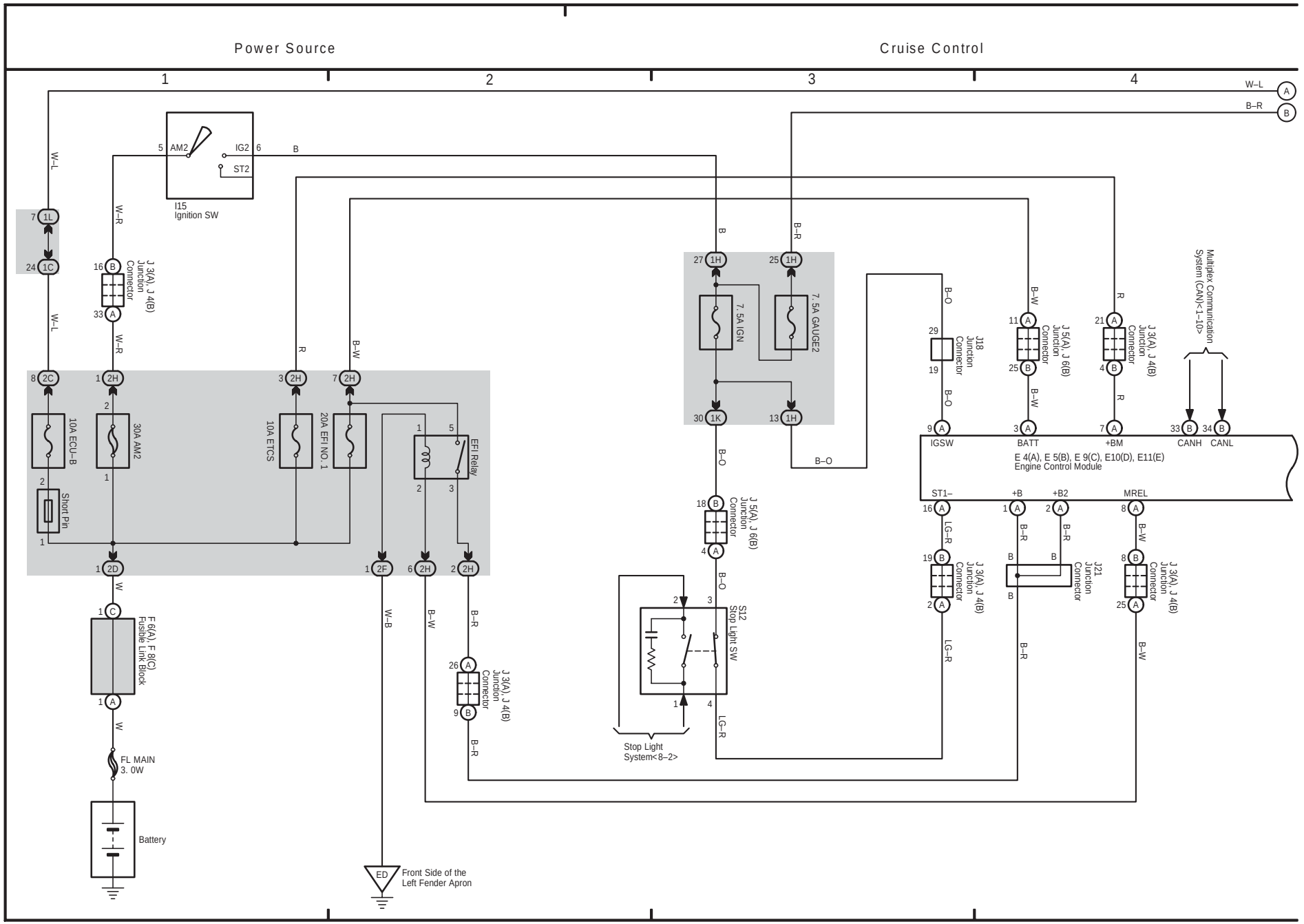

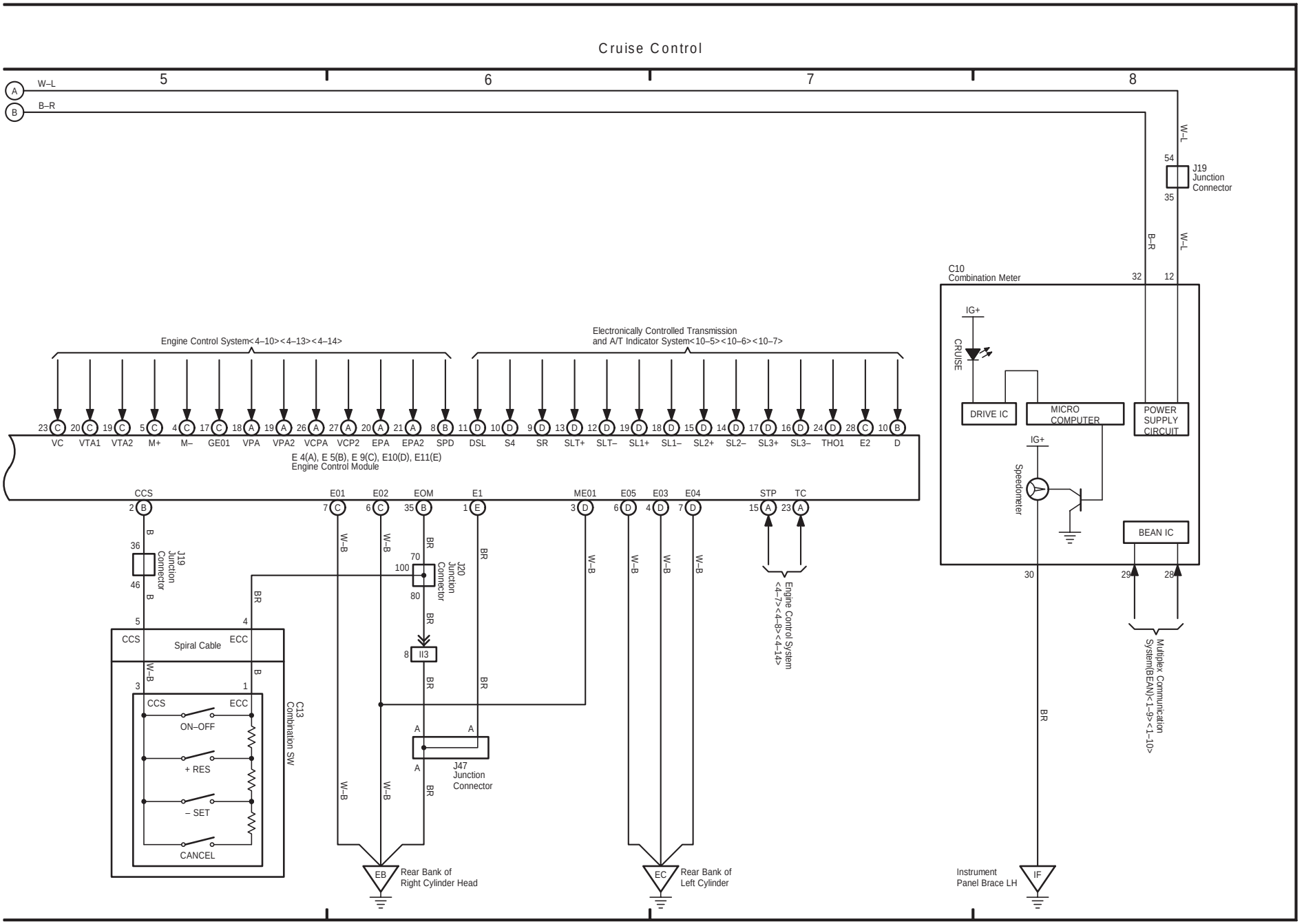
Cruise Control
5
6
7
8
W–L
B–R
J19 Junction Connector
C10 Combination Meter
IG+
CRUISE
DRIVE IC
MICRO COMPUTER
POWER SUPPLY CIRCUIT
Speedometer
BEAN IC
Engine Control System<4–10><4–13><4–14>
Electronically Controlled Transmission and A/T Indicator System<10–5><10–6><10–7>
VC VTA1 VTA2 M+ M– GE01 VPA VPA2 VCPA VCP2 EPA EPA2 SPD DSL S4 SR SLT+ SLT– SL1+ SL1– SL2+ SL2– SL3+ SL3– THO1 E2 D
E 4(A), E 5(B), E 9(C), E10(D), E11(E) Engine Control Module
CCS E01 E02 EOM E1 ME01 E05 E03 E04 STP TC
J19 Junction Connector
J20 Junction Connector
Spiral Cable
CCS ECC
ON–OFF
+ RES
– SET
CANCEL
C13 Combination SW
J47 Junction Connector
Engine Control System <4–7><4–8><4–14>
Multiplex Communication System(BEAN)<1–9><1–10>
EB Rear Bank of Right Cylinder Head
EC Rear Bank of Left Cylinder
Instrument Panel Brace LH
IF

13 SIENNA

(Cont. next page)

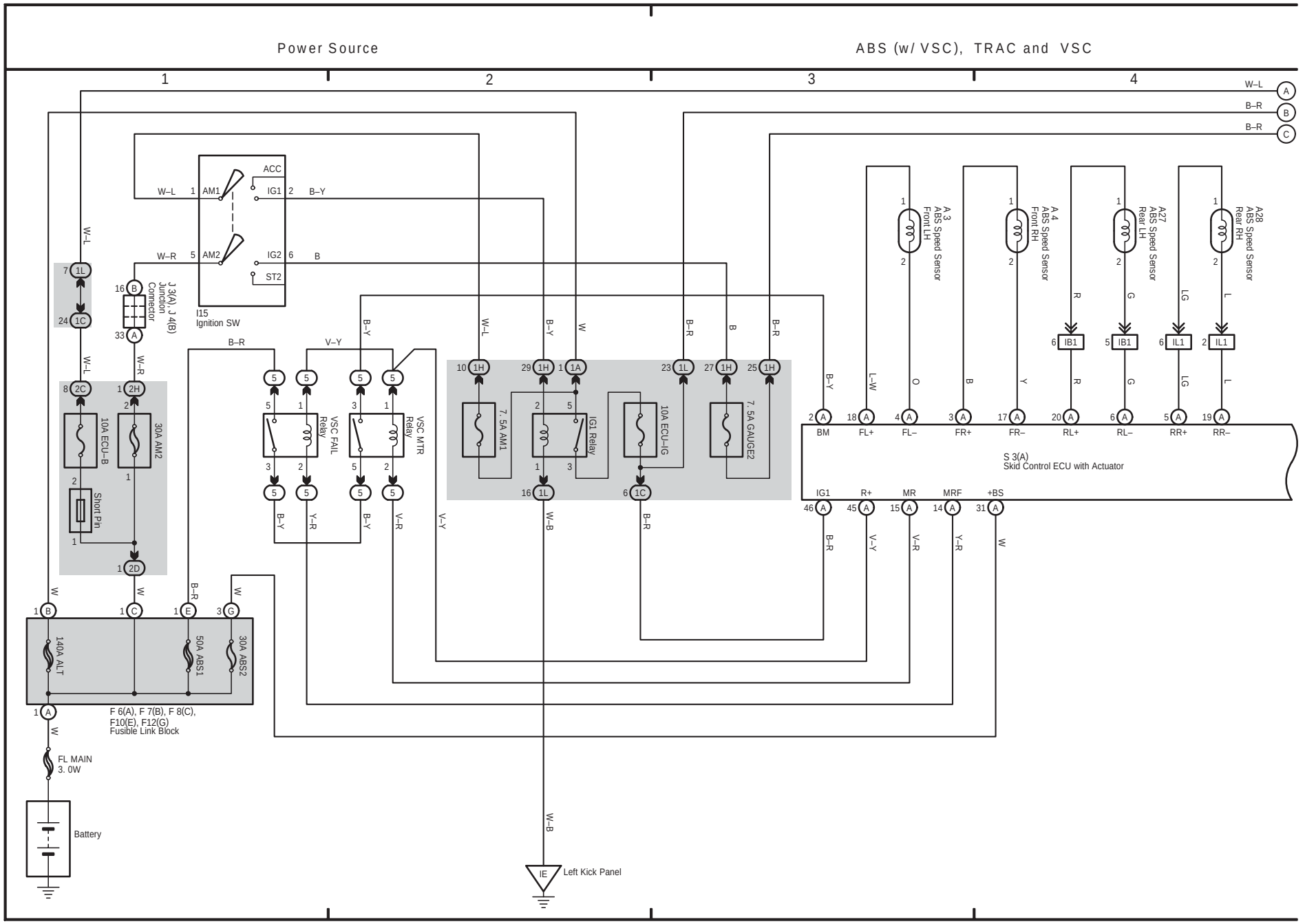

(Cont. next page)

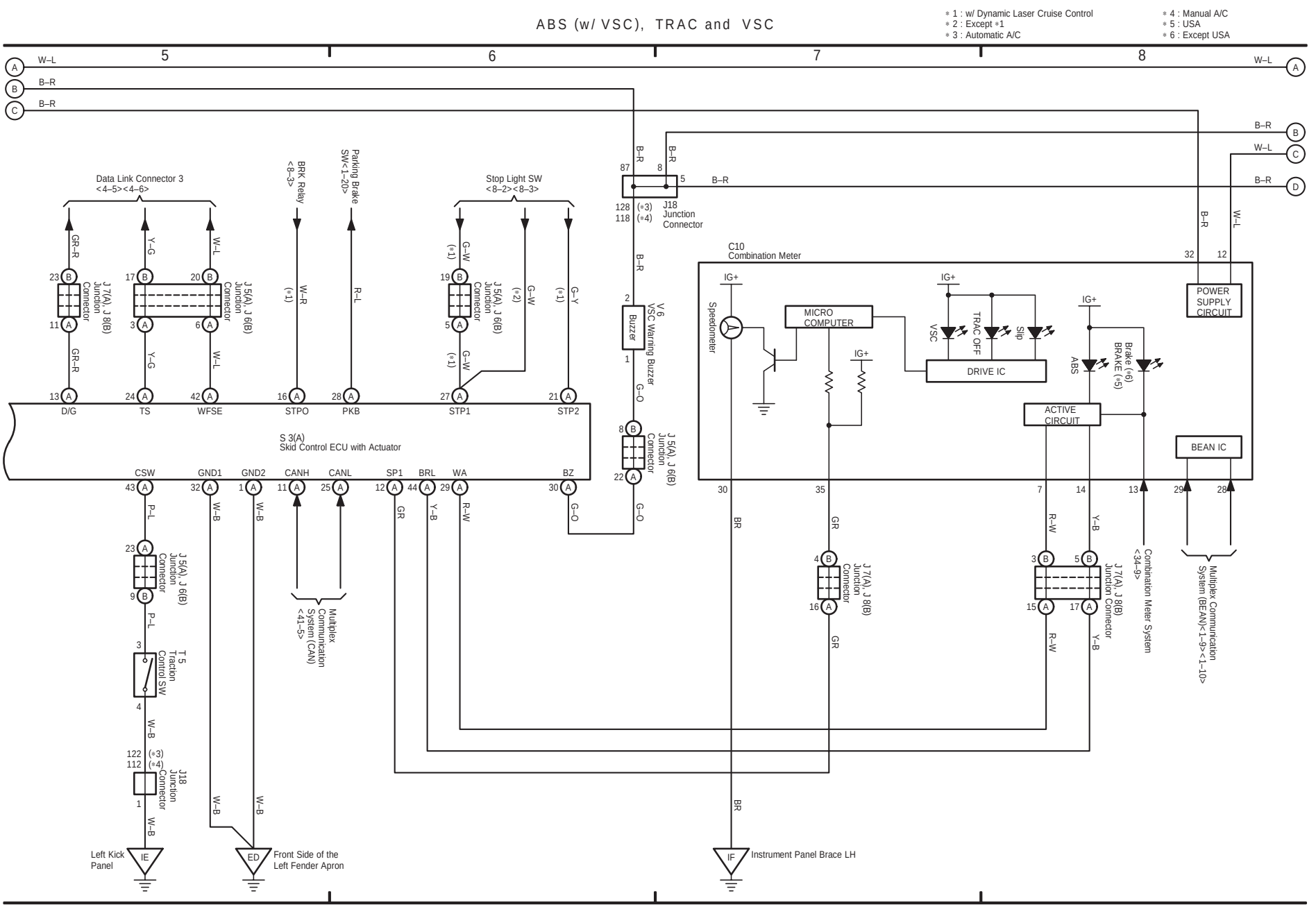

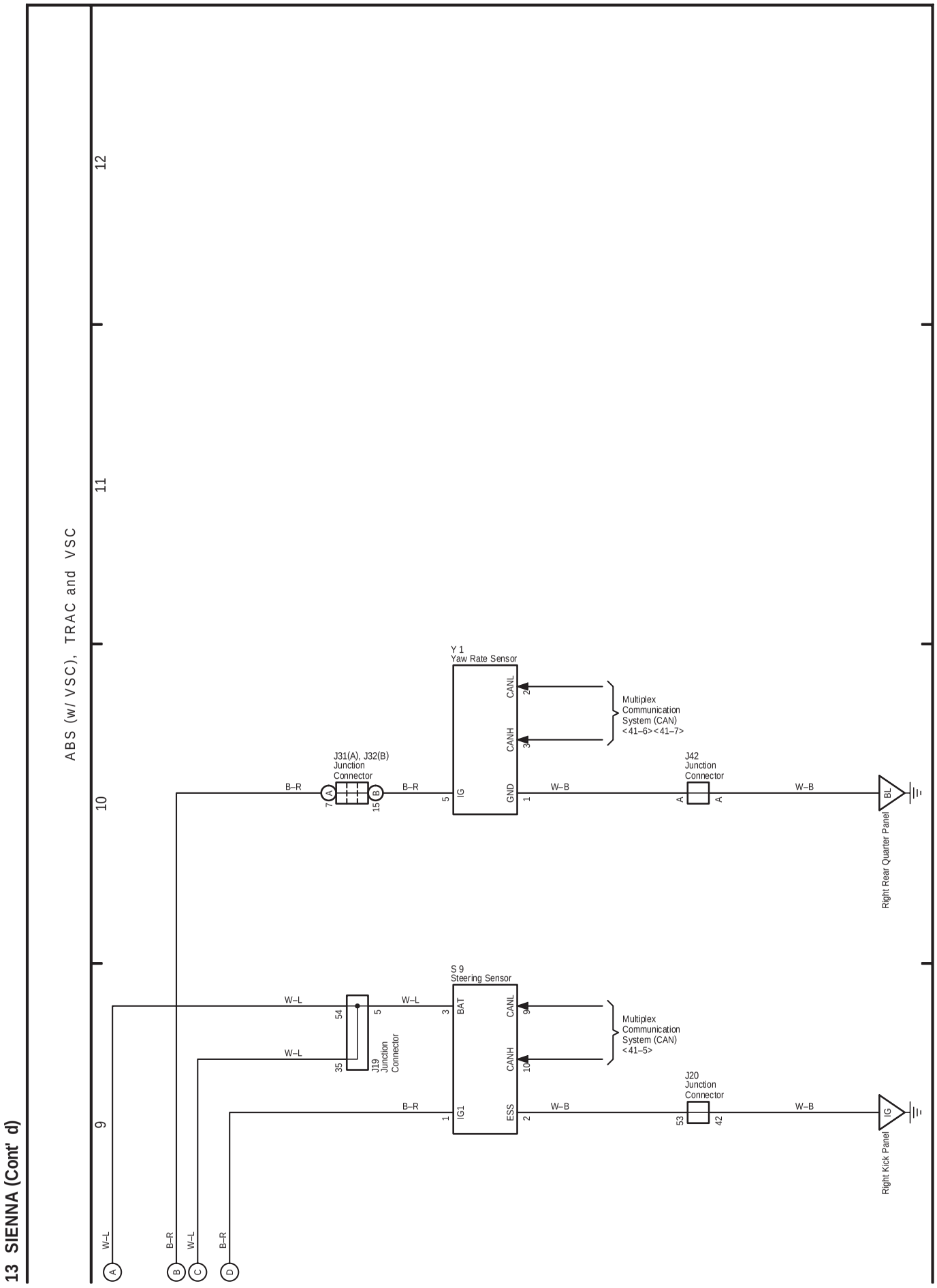
13 SIENNA (Cont' d)
ABS (w/ VSC), TRAC and VSC
12
11
10
9
Y 1
Yaw Rate Sensor
CANL
CANH
IG
GND
Multiplex
Communication
System (CAN)
<41–6><41–7>
J31(A), J32(B)
Junction
Connector
J42
Junction
Connector
B–R
W–B
BL
Right Rear Quarter Panel
S 9
Steering Sensor
BAT
IG1
ESS
W–L
J19
Junction
Connector
Multiplex
Communication
System (CAN)
<41–5>
J20
Junction
Connector
IG
Right Kick Panel
A
B
C
D

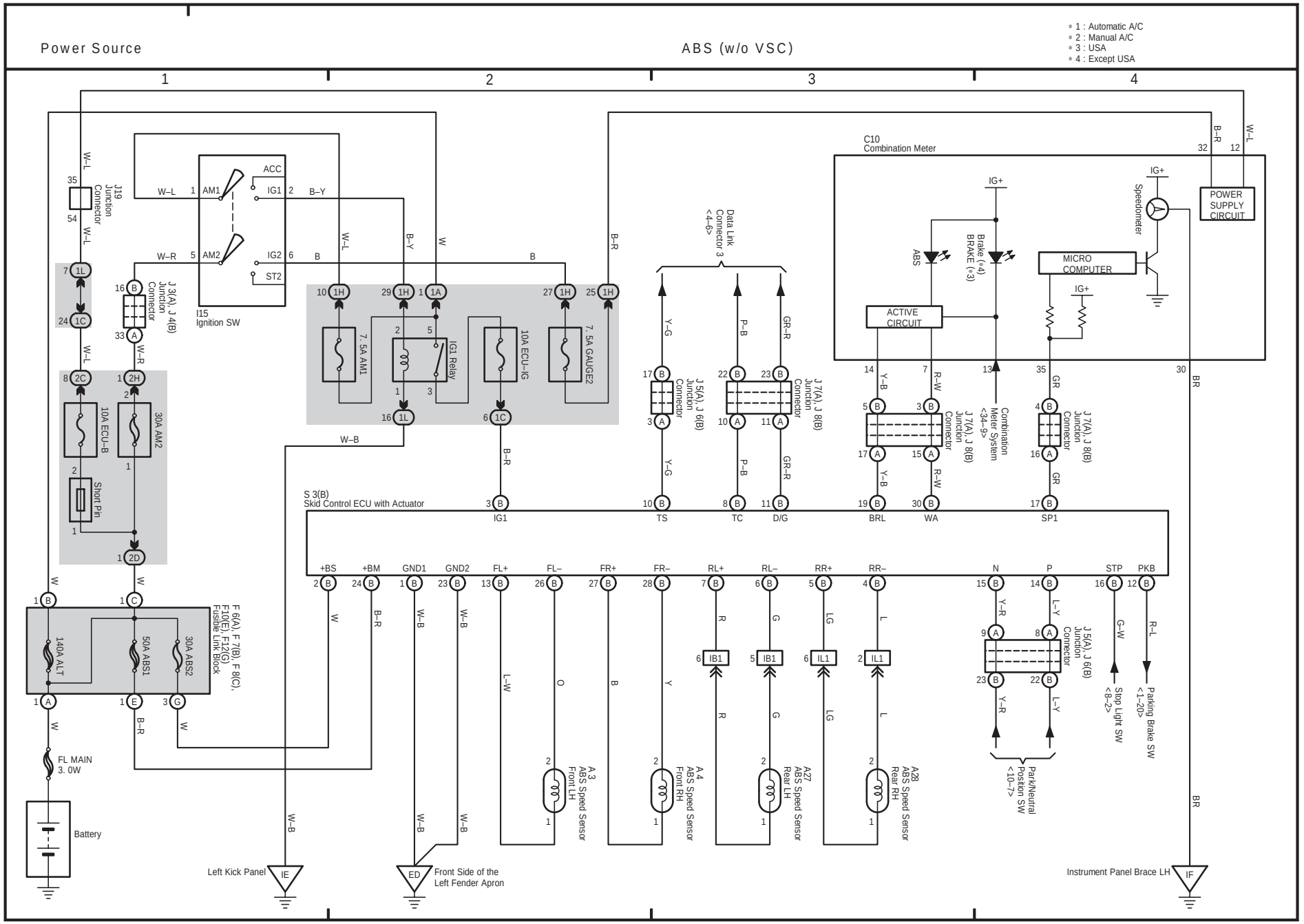
Power Source
ABS (w/o VSC)
* 1 : Automatic A/C
* 2 : Manual A/C
* 3 : USA
* 4 : Except USA
1
2
3
4
C10
Combination Meter
POWER SUPPLY CIRCUIT
Speedometer
MICRO COMPUTER
ACTIVE CIRCUIT
ABS
Brake (*4)
BRAKE (*3)
Data Link Connector 3 <4-6>
J19 Junction Connector
J3(A), J 4(B) Junction Connector
I15 Ignition SW
ACC
AM1
AM2
IG1
IG2
ST2
7. 5A AM1
IG1 Relay
10A ECU–IG
7. 5A GAUGE2
10A ECU–B
30A AM2
Short Pin
J5(A), J 6(B) Junction Connector
J 7(A), J 8(B) Junction Connector
J 7(A), J 8(B) Junction Connector
Combination Meter System <34–9>
J 7(A), J 8(B) Junction Connector
S 3(B)
Skid Control ECU with Actuator
IG1
TS
TC
D/G
BRL
WA
SP1
+BS
+BM
GND1
GND2
FL+
FL–
FR+
FR–
RL+
RL–
RR+
RR–
N
P
STP
PKB
F 6(A), F 7(B), F 8(C), F10(E), F12(G) Fusible Link Block
140A ALT
50A ABS1
30A ABS2
FL MAIN 3. 0W
Battery
IB1
IL1
A3 ABS Speed Sensor Front LH
A4 ABS Speed Sensor Front RH
A27 ABS Speed Sensor Rear LH
A28 ABS Speed Sensor Rear RH
J5(A), J 6(B) Junction Connector
Park/Neutral Position SW <10–7>
Stop Light SW <8–2>
Parking Brake SW <1–20>
Left Kick Panel
IE
ED
Front Side of the Left Fender Apron
Instrument Panel Brace LH
IF

(Cont. next page)

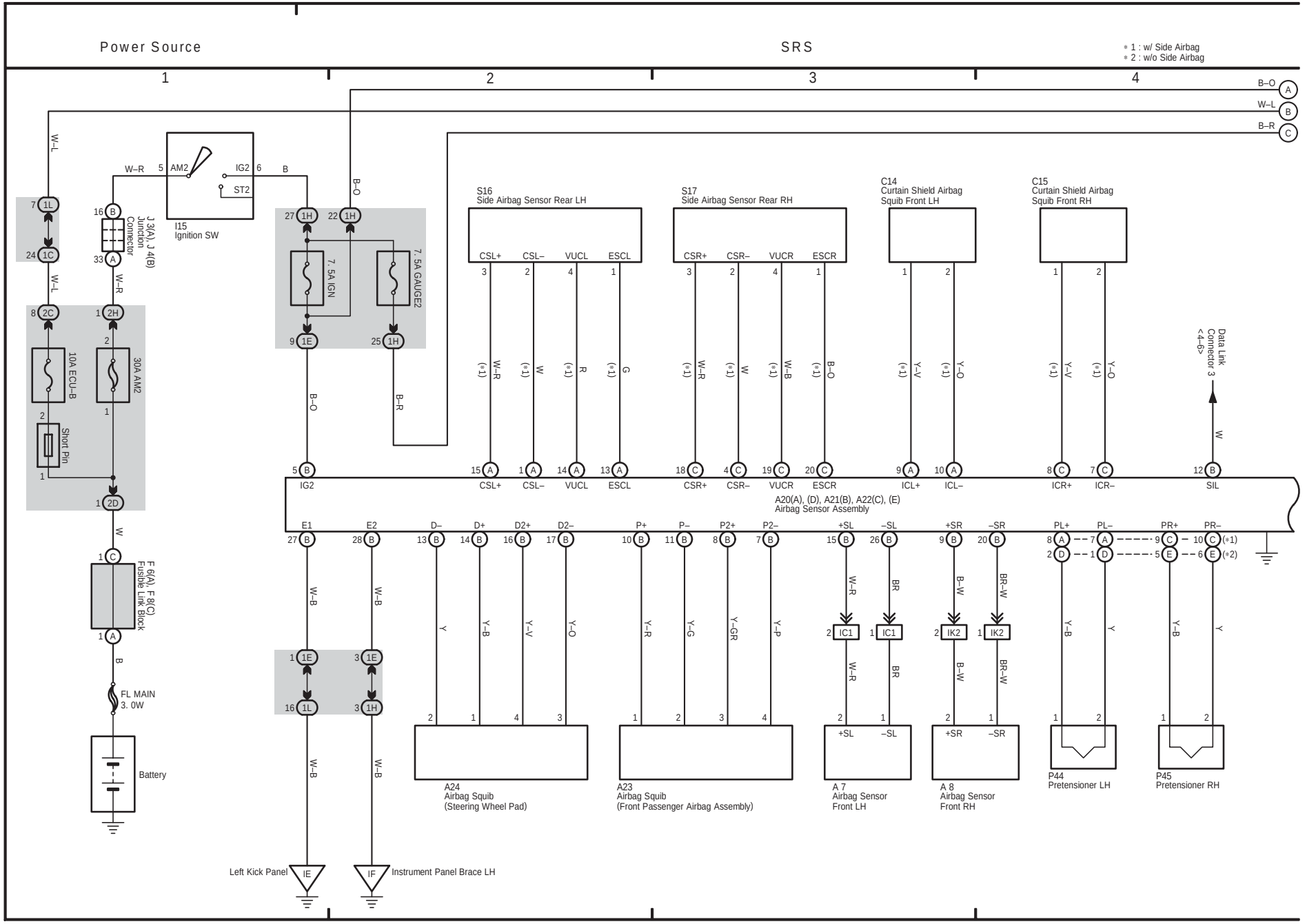

(Cont. next page)

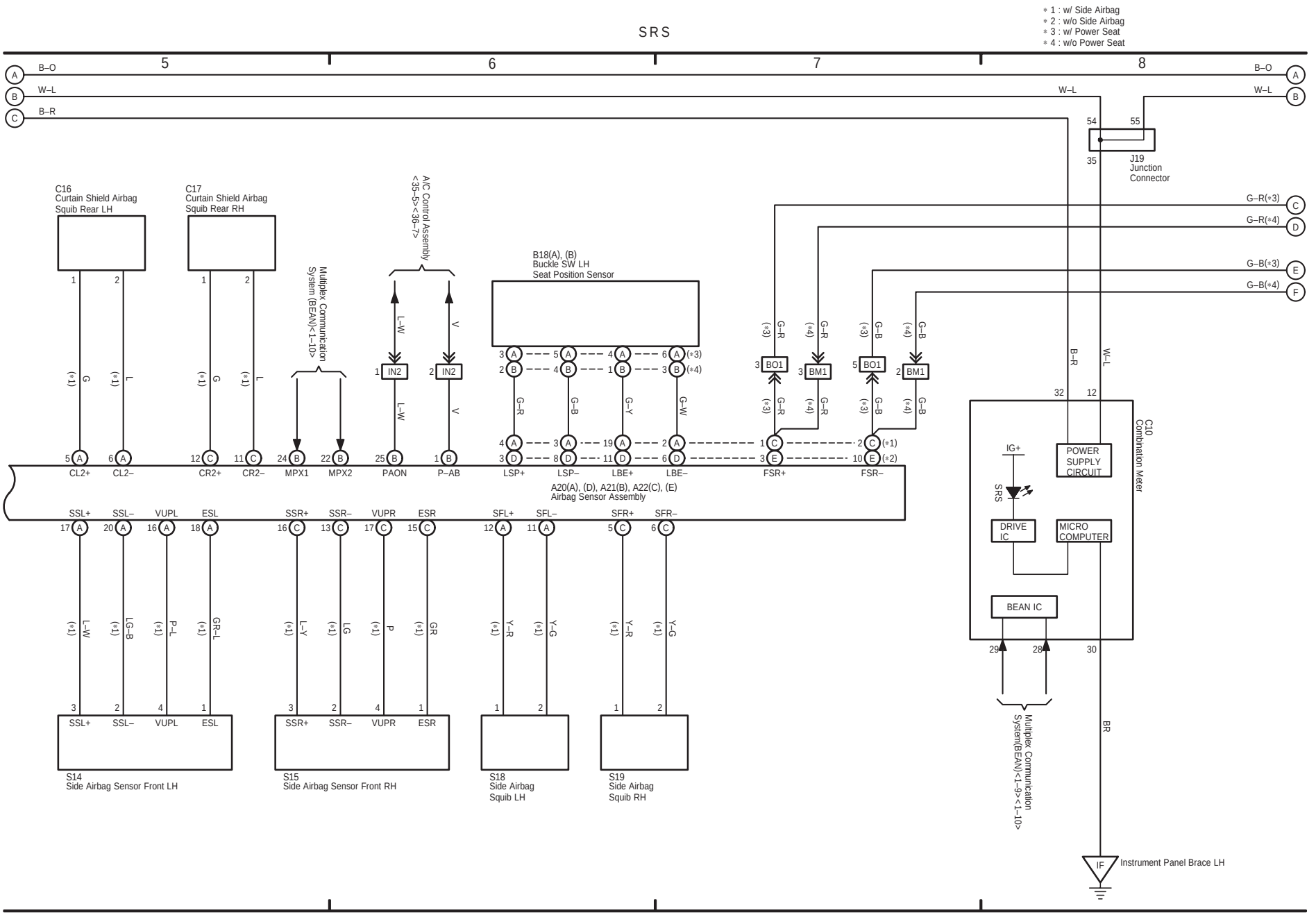

15 SIENNA (Cont' d)

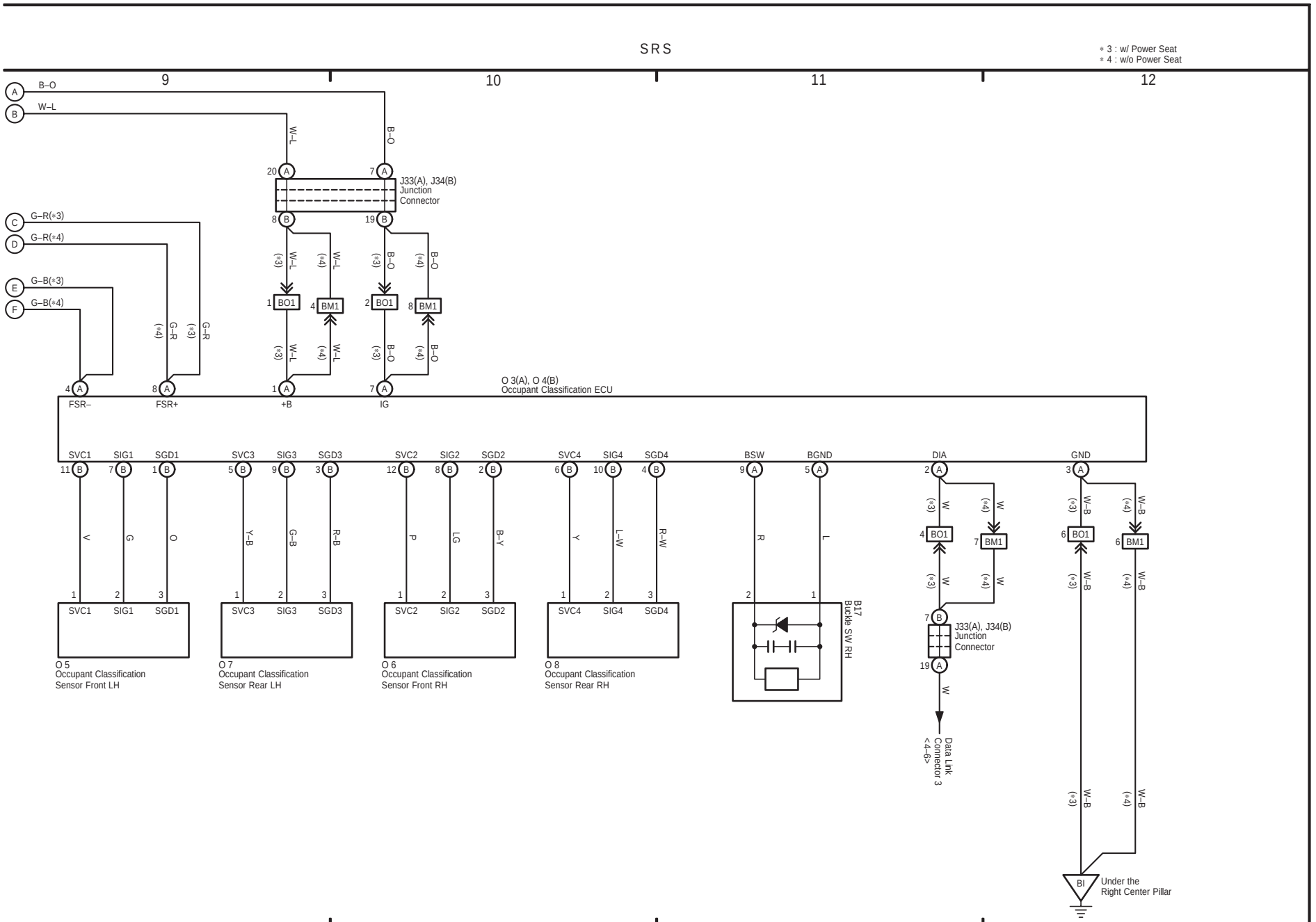

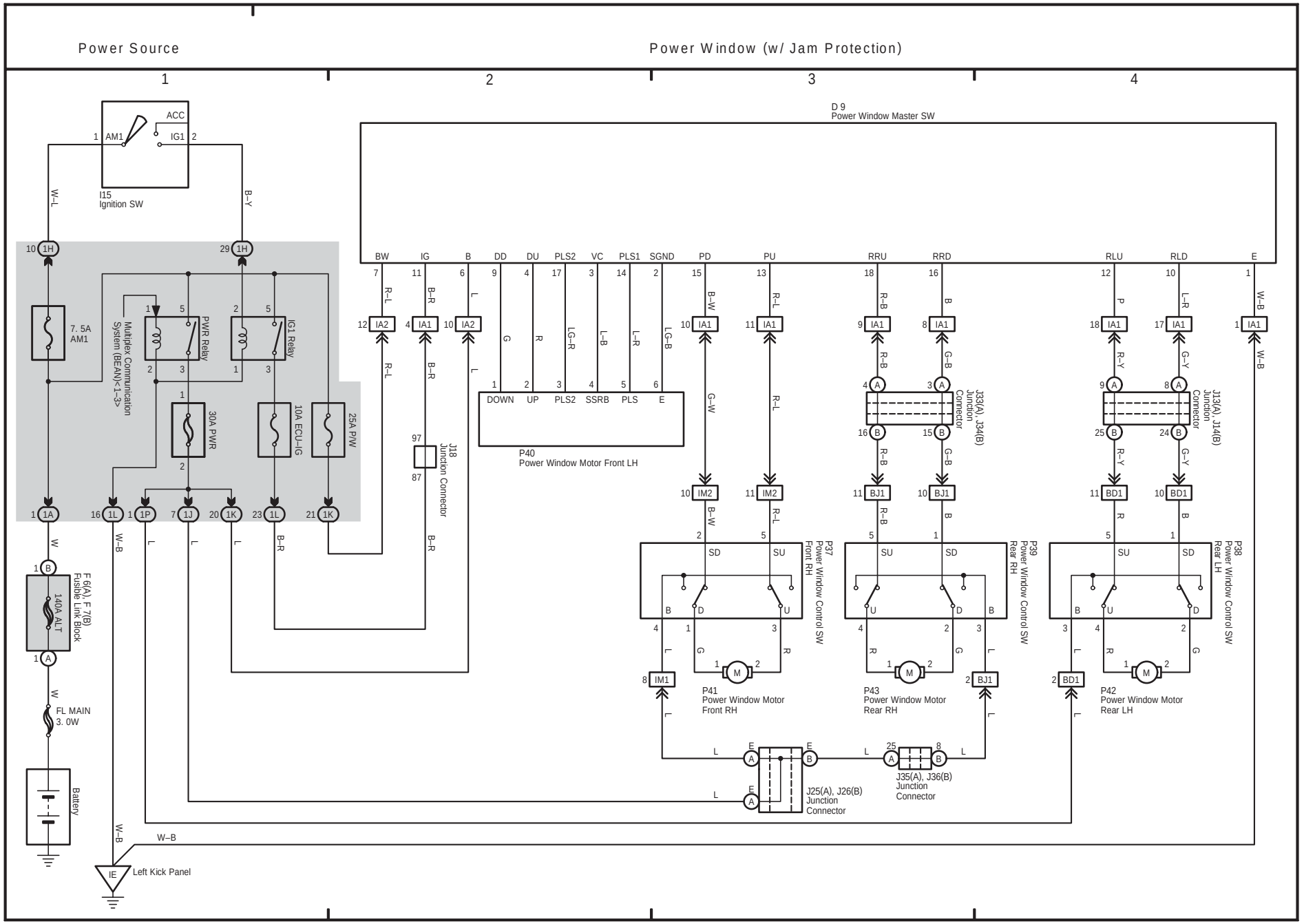
Power Source
Power Window (w/ Jam Protection)
1
2
3
4
ACC
AM1
IG1
I15
Ignition SW
W–L
B–Y
D 9
Power Window Master SW
BW
IG
B
DD
DU
PLS2
VC
PLS1
SGND
PD
PU
RRU
RRD
RLU
RLD
E
DOWN
UP
PLS2
SSRB
PLS
E
P40
Power Window Motor Front LH
7. 5A
AM1
Multiplex Communication System (BEAN)<1–3>
PWR Relay
IG1 Relay
30A PWR
10A ECU–IG
25A P/W
J18
Junction Connector
F 6(A), F 7(B)
Fusible Link Block
140A ALT
FL MAIN
3. 0W
Battery
W–B
Left Kick Panel
J25(A), J26(B)
Junction
Connector
J35(A), J36(B)
Junction
Connector
J33(A), J34(B)
Junction
Connector
J13(A), J14(B)
Junction
Connector
P37
Power Window Control SW
Front RH
P39
Power Window Control SW
Rear RH
P38
Power Window Control SW
Rear LH
P41
Power Window Motor
Front RH
P43
Power Window Motor
Rear RH
P42
Power Window Motor
Rear LH

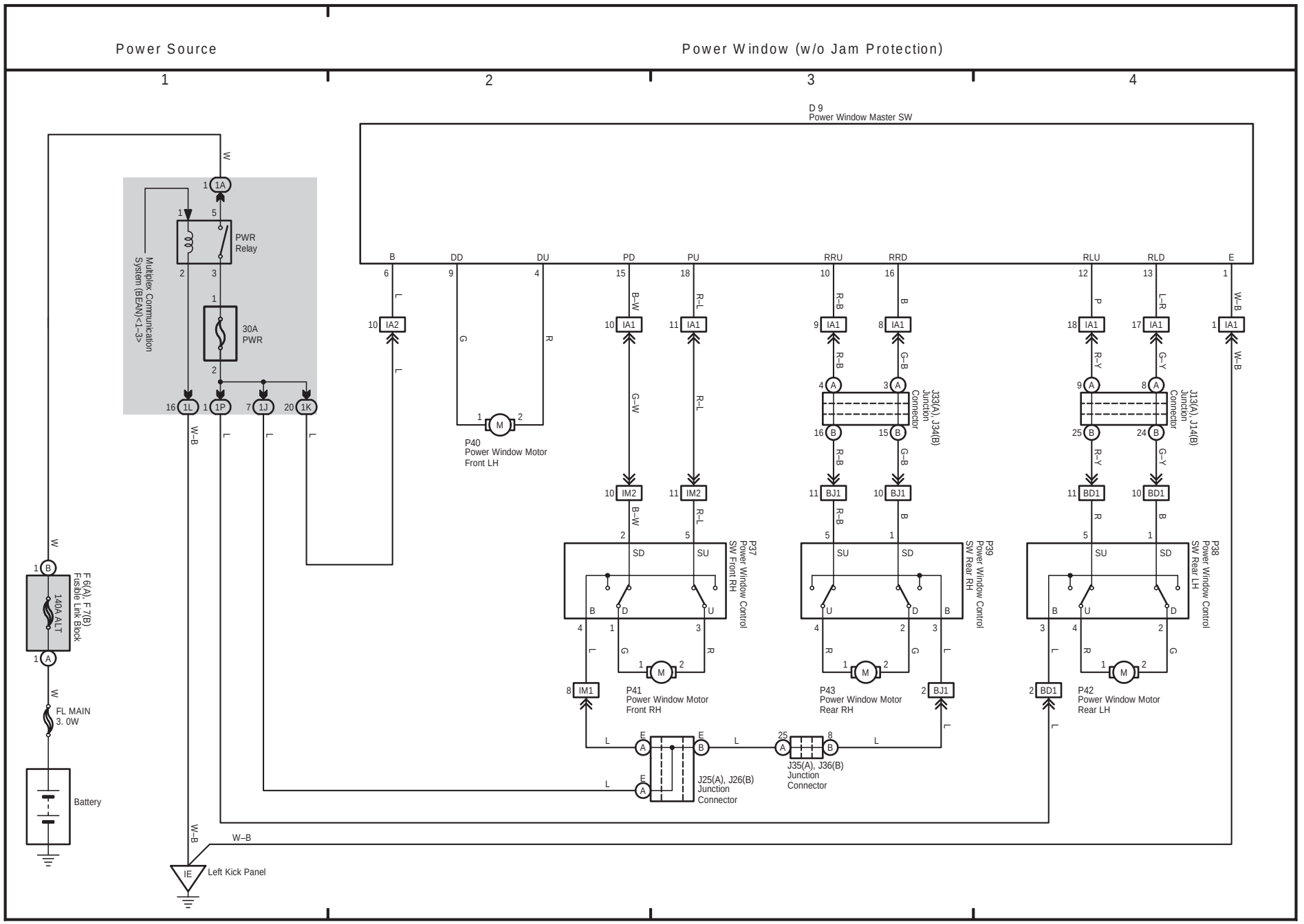
Power Source
Power Window (w/o Jam Protection)
1
2
3
4
D 9
Power Window Master SW
PWR Relay
30A PWR
Multiplex Communication System (BEAN)<1–3>
F6(A), F7(B) Fusible Link Block
140A ALT
FL MAIN 3. 0W
Battery
IE
Left Kick Panel
W–B
P40 Power Window Motor Front LH
P41 Power Window Motor Front RH
P43 Power Window Motor Rear RH
P42 Power Window Motor Rear LH
P37 Power Window Control SW Front RH
P39 Power Window Control SW Rear RH
P38 Power Window Control SW Rear LH
J25(A), J26(B) Junction Connector
J35(A), J36(B) Junction Connector
J33(A), J34(B) Junction Connector
J13(A), J14(B) Junction Connector

18 SIENNA

(Cont. next page)

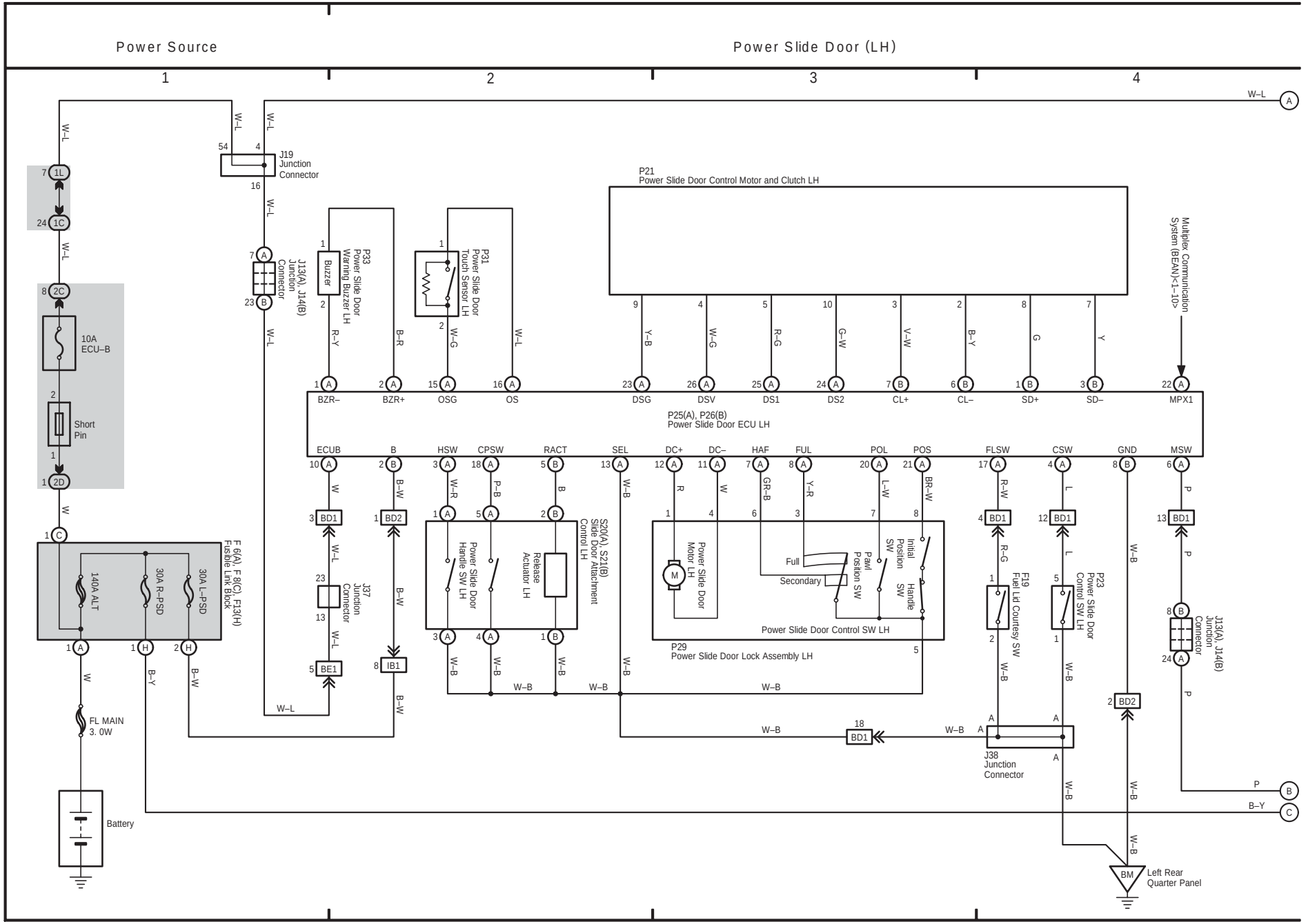

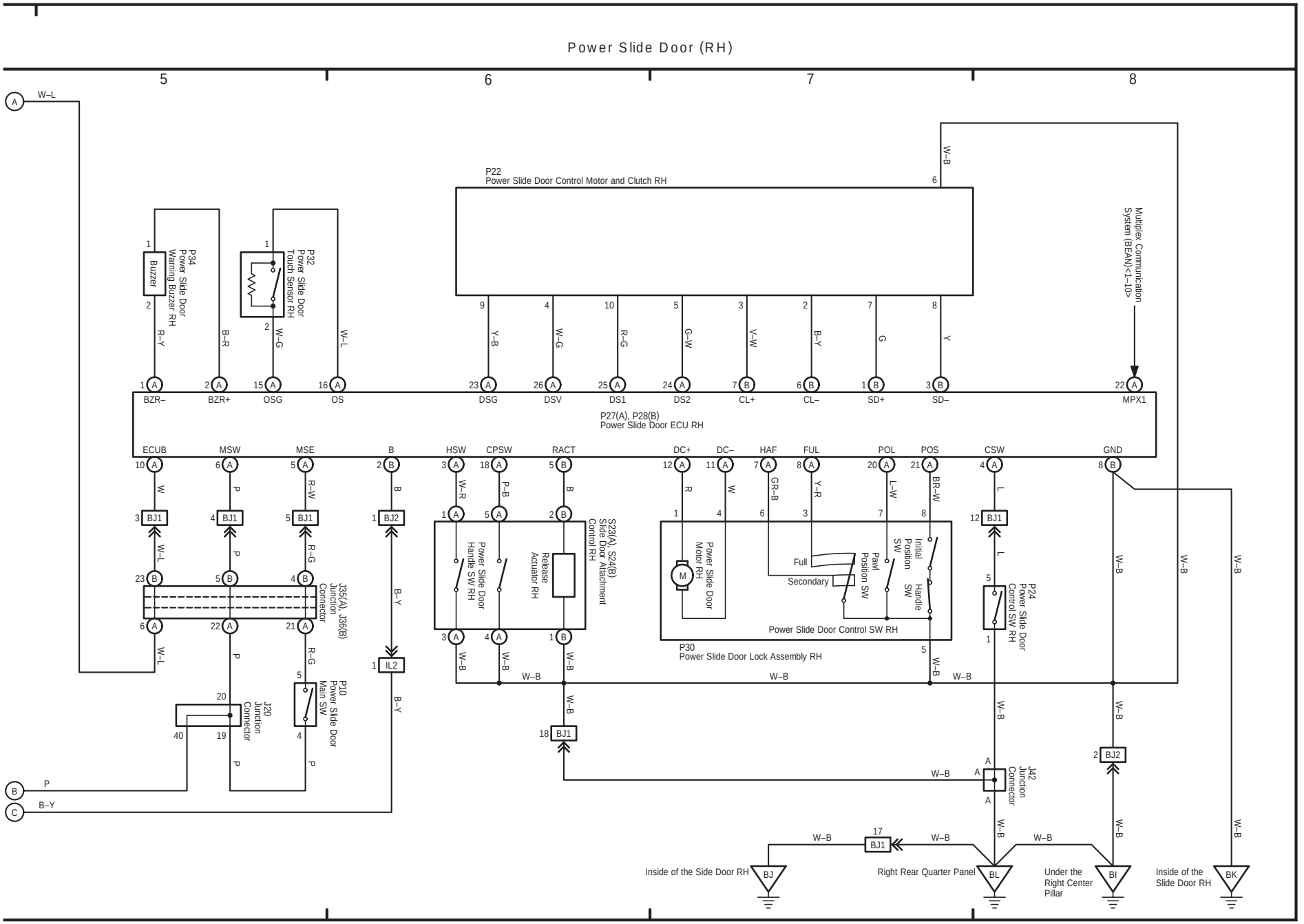
Power Slide Door (RH)
5
6
7
8
W–L
P22
Power Slide Door Control Motor and Clutch RH
W–B
Multiplex Communication System (BEAN) <1–10>
P34
Power Slide Door Warning Buzzer RH
Buzzer
R–Y
B–R
P32
Power Slide Door Touch Sensor RH
W–G
W–L
Y–B
W–G
R–G
G–W
V–W
B–Y
G
Y
BZR–
BZR+
OSG
OS
DSG
DSV
DS1
DS2
CL+
CL–
SD+
SD–
MPX1
P27(A), P28(B)
Power Slide Door ECU RH
ECUB
MSW
MSE
B
HSW
CPSW
RACT
DC+
DC–
HAF
FUL
POL
POS
CSW
GND
W
P
R–W
B
W–R
P–B
R
W
GR–B
Y–R
L–W
BR–W
L
BJ1
BJ2
W–L
R–G
B–Y
J35(A), J36(B)
Junction Connector
J20
Junction Connector
P10
Power Slide Door Main SW
IL2
S23(A), S24(B)
Slide Door Attachment Control RH
Power Slide Door Handle SW RH
Release Actuator RH
Power Slide Door Motor RH
Full
Secondary
Pawl Position SW
Initial Position SW
Handle SW
Power Slide Door Control SW RH
P30
Power Slide Door Lock Assembly RH
P24
Power Slide Door Control SW RH
J42
Junction Connector
W–B
P
B–Y
Inside of the Side Door RH
Right Rear Quarter Panel
Under the Right Center Pillar
Inside of the Slide Door RH
BJ
BL
BI
BK

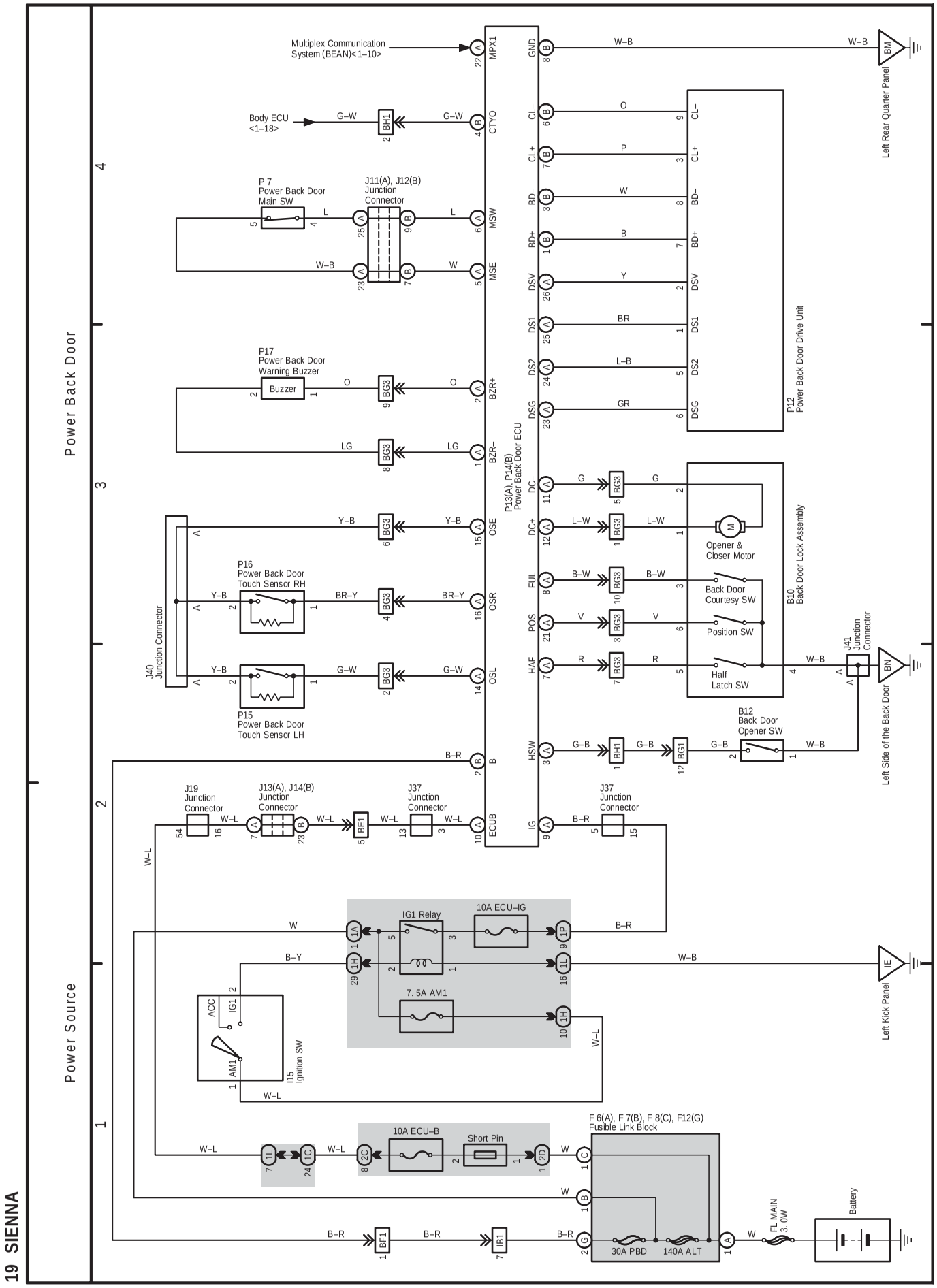
Power Back Door
Power Source
Multiplex Communication System (BEAN)<1–10>
Body ECU <1–18>
P 7 Power Back Door Main SW
J11(A), J12(B) Junction Connector
P17 Power Back Door Warning Buzzer
Buzzer
P16 Power Back Door Touch Sensor RH
P15 Power Back Door Touch Sensor LH
J40 Junction Connector
P13(A), P14(B) Power Back Door ECU
P12 Power Back Door Drive Unit
B10 Back Door Lock Assembly
Opener & Closer Motor
Back Door Courtesy SW
Position SW
Half Latch SW
J41 Junction Connector
B12 Back Door Opener SW
Left Rear Quarter Panel
Left Side of the Back Door
Left Kick Panel
J19 Junction Connector
J13(A), J14(B) Junction Connector
J37 Junction Connector
IG1 Relay
10A ECU–IG
7. 5A AM1
ACC
IG1
AM1
I15 Ignition SW
10A ECU–B
Short Pin
F 6(A), F 7(B), F 8(C), F12(G) Fusible Link Block
30A PBD
140A ALT
FL MAIN 3. 0W
Battery

19 SIENNA

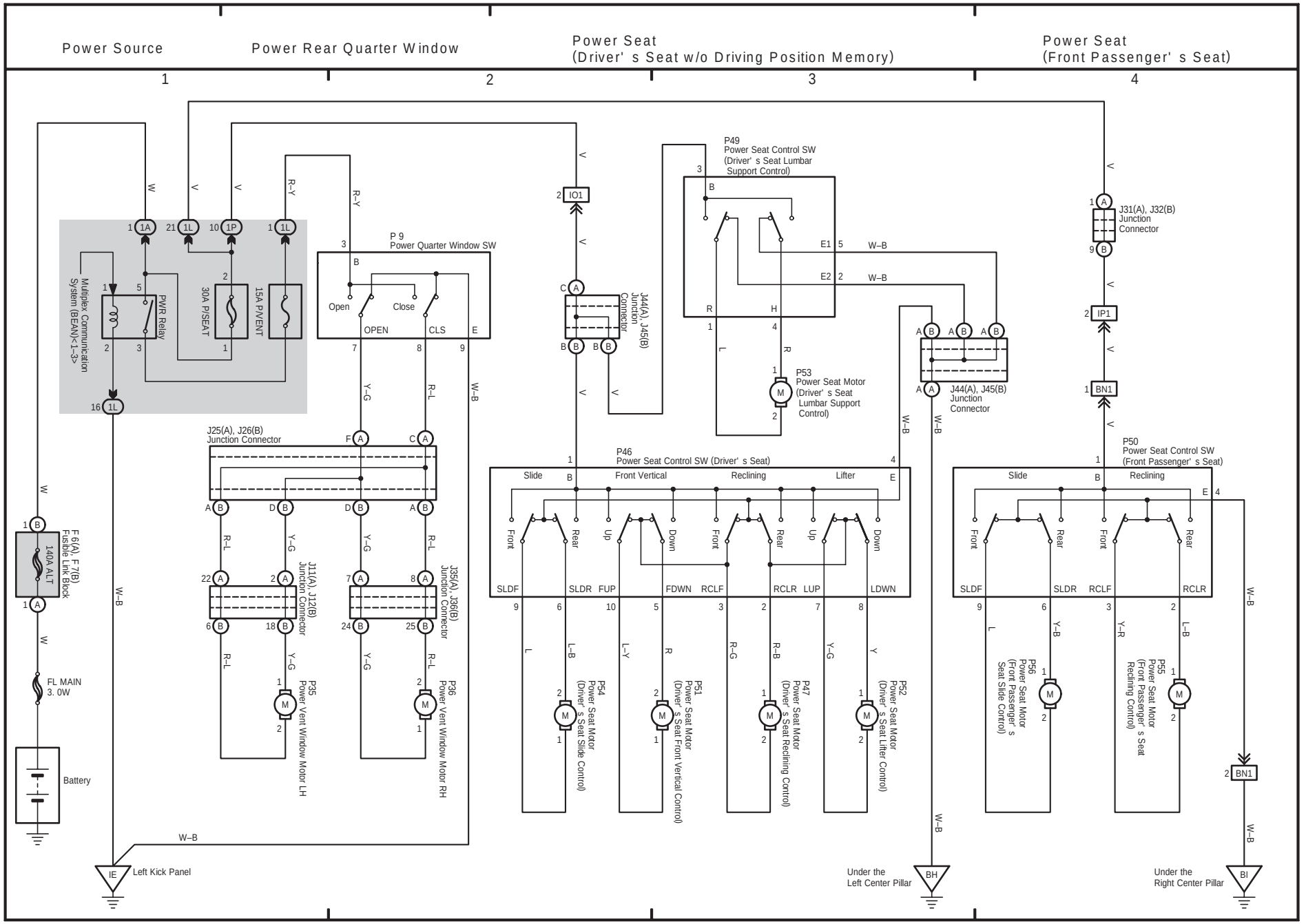
Power Source
Power Rear Quarter Window
Power Seat
(Driver' s Seat w/o Driving Position Memory)
Power Seat
(Front Passenger' s Seat)
1
2
3
4
Multiplex Communication System (BEAN)<1-3>
PWR Relay
30A P/SEAT
15A P/VENT
P 9
Power Quarter Window SW
Open
Close
OPEN
CLS
J44(A), J45(B) Junction Connector
P49
Power Seat Control SW (Driver' s Seat Lumbar Support Control)
P53
Power Seat Motor (Driver' s Seat Lumbar Support Control)
J44(A), J45(B) Junction Connector
J31(A), J32(B) Junction Connector
J25(A), J26(B) Junction Connector
P46
Power Seat Control SW (Driver' s Seat)
Slide
Front Vertical
Reclining
Lifter
Front
Rear
Up
Down
SLDF
SLDR
FUP
FDWN
RCLF
RCLR
LUP
LDWN
P50
Power Seat Control SW (Front Passenger' s Seat)
F 6(A), F 7(B) Fusible Link Block
140A ALT
FL MAIN 3. 0W
Battery
J11(A), J12(B) Junction Connector
J35(A), J36(B) Junction Connector
P35
Power Vent Window Motor LH
P36
Power Vent Window Motor RH
P54
Power Seat Motor (Driver' s Seat Slide Control)
P51
Power Seat Motor (Driver' s Seat Front Vertical Control)
P47
Power Seat Motor (Driver' s Seat Reclining Control)
P52
Power Seat Motor (Driver' s Seat Lifter Control)
P56
Power Seat Motor (Front Passenger' s Seat Slide Control)
P55
Power Seat Motor (Front Passenger' s Seat Reclining Control)
IE
Left Kick Panel
BH
Under the Left Center Pillar
BI
Under the Right Center Pillar
W–B

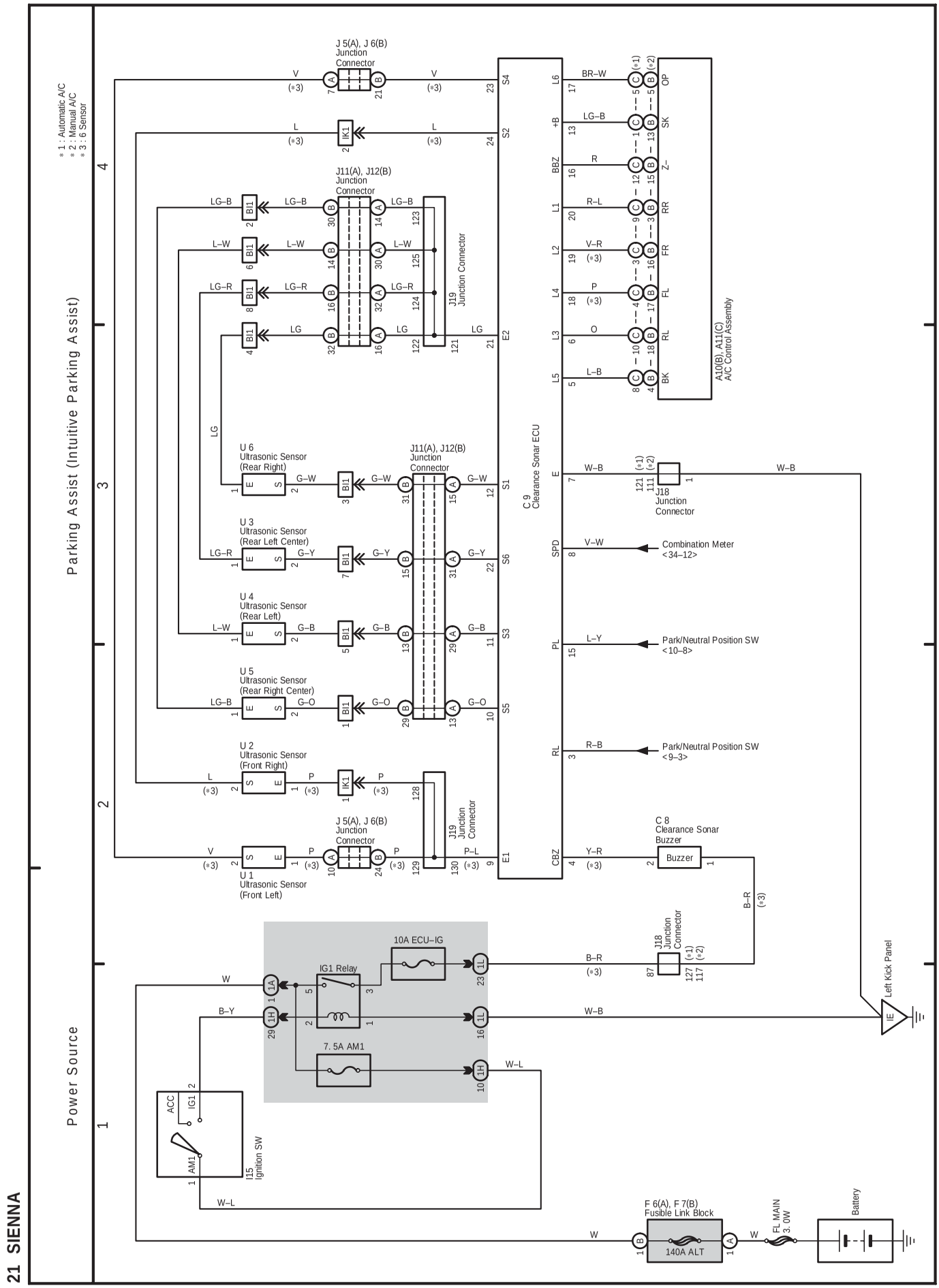
* 1 : Automatic A/C
* 2 : Manual A/C
* 3 : 6 Sensor
Parking Assist (Intuitive Parking Assist)
Power Source
J 5(A), J 6(B) Junction Connector
J11(A), J12(B) Junction Connector
J19 Junction Connector
U 6 Ultrasonic Sensor (Rear Right)
U 3 Ultrasonic Sensor (Rear Left Center)
U 4 Ultrasonic Sensor (Rear Left)
U 5 Ultrasonic Sensor (Rear Right Center)
U 2 Ultrasonic Sensor (Front Right)
U 1 Ultrasonic Sensor (Front Left)
C 9 Clearance Sonar ECU
A10(B), A11(C) A/C Control Assembly
J18 Junction Connector
Combination Meter <34–12>
Park/Neutral Position SW <10–8>
Park/Neutral Position SW <9–3>
C 8 Clearance Sonar Buzzer
Buzzer
10A ECU–IG
IG1 Relay
7. 5A AM1
I15 Ignition SW
ACC
IG1
AM1
Left Kick Panel
F 6(A), F 7(B) Fusible Link Block
140A ALT
FL MAIN 3. 0W
Battery

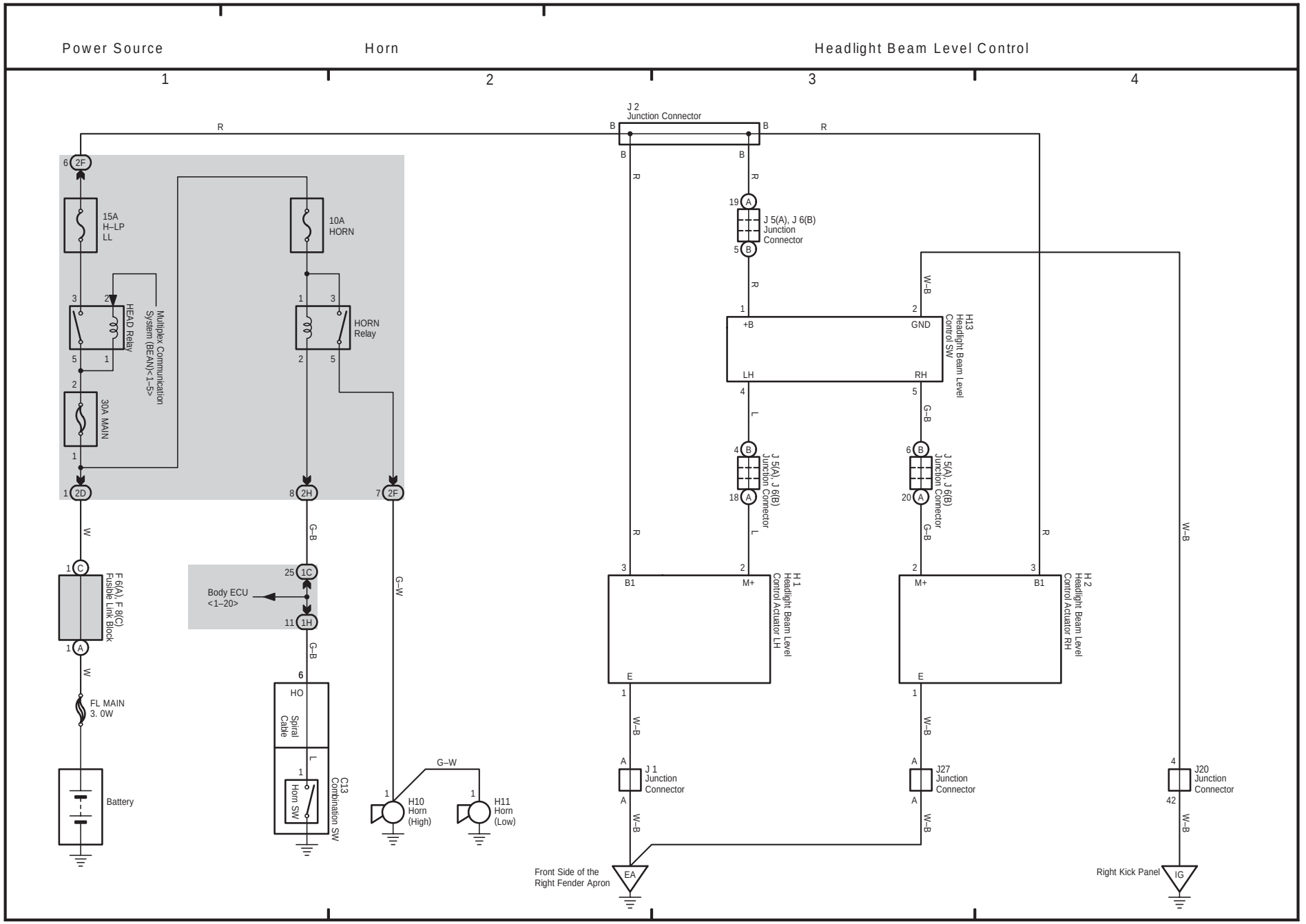
Power Source
Horn
Headlight Beam Level Control
1
2
3
4
J 2
Junction Connector
15A
H–LP
LL
10A
HORN
HEAD Relay
Multiplex Communication System (BEAN)<1–5>
HORN
Relay
30A MAIN
J 5(A), J 6(B)
Junction
Connector
H13
Headlight Beam Level
Control SW
+B
GND
LH
RH
J 5(A), J 6(B)
Junction Connector
H1
Headlight Beam Level
Control Actuator LH
H2
Headlight Beam Level
Control Actuator RH
B1
M+
F 6(A), F 8(C)
Fusible Link Block
FL MAIN
3. 0W
Battery
Body ECU
<1–20>
Spiral
Cable
C13
Combination SW
Horn SW
H10
Horn
(High)
H11
Horn
(Low)
J 1
Junction
Connector
J27
Junction
Connector
J20
Junction
Connector
Front Side of the
Right Fender Apron
EA
Right Kick Panel
IG

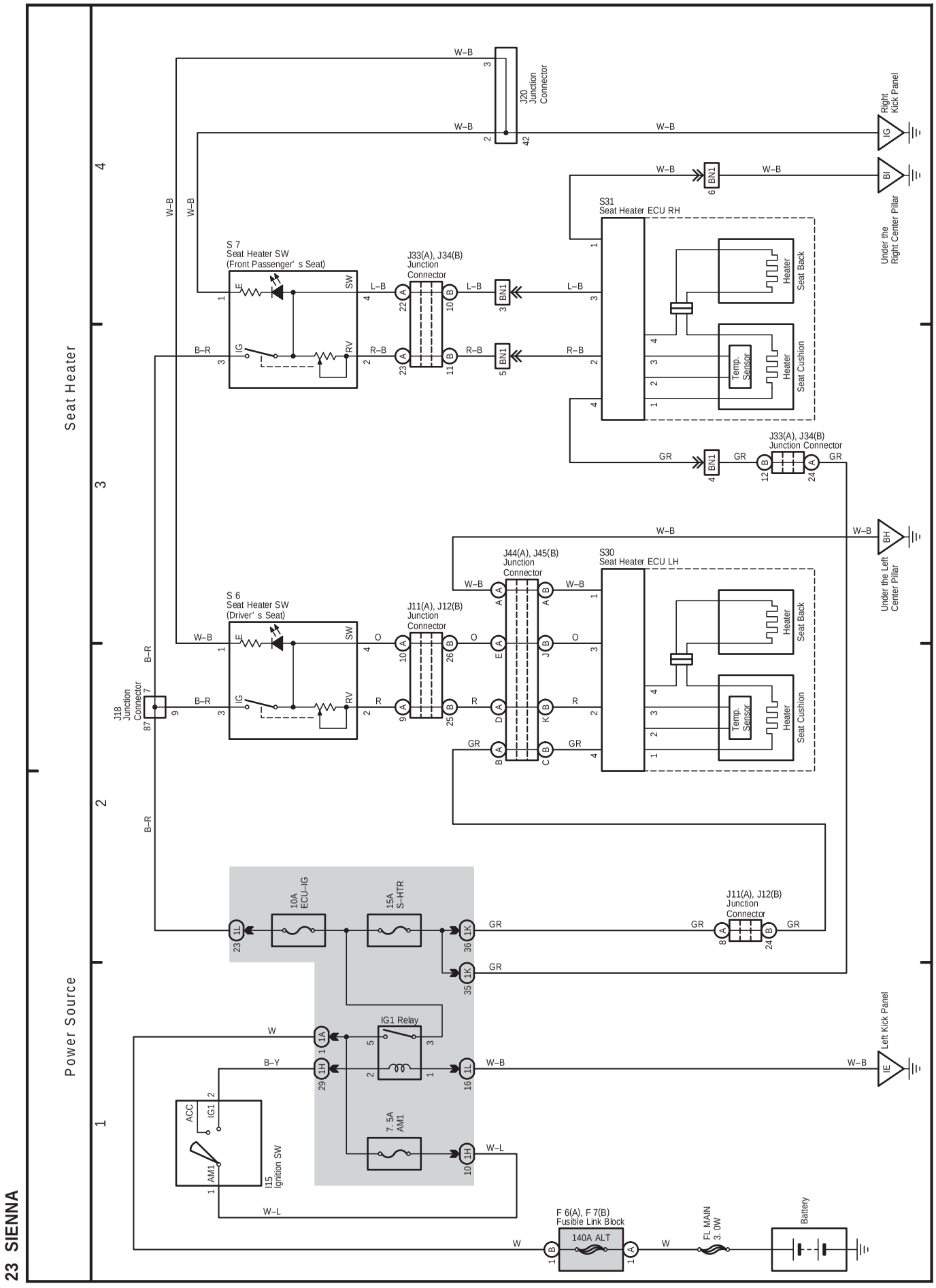
Seat Heater
Power Source
S 7
Seat Heater SW
(Front Passenger' s Seat)
S 6
Seat Heater SW
(Driver' s Seat)
S31
Seat Heater ECU RH
S30
Seat Heater ECU LH
J20
Junction
Connector
J33(A), J34(B)
Junction
Connector
J44(A), J45(B)
Junction
Connector
J11(A), J12(B)
Junction
Connector
J18
Junction
Connector
Heater
Seat Back
Seat Cushion
Temp.
Sensor
Right
Kick Panel
Under the
Right Center Pillar
Under the Left
Center Pillar
Left Kick Panel
10A
ECU–IG
15A
S–HTR
IG1 Relay
7. 5A
AM1
I15
Ignition SW
ACC
IG1
AM1
F 6(A), F 7(B)
Fusible Link Block
140A ALT
FL MAIN
3. 0W
Battery
W–B
B–R
B–Y
W
W–L
L–B
R–B
O
R
GR

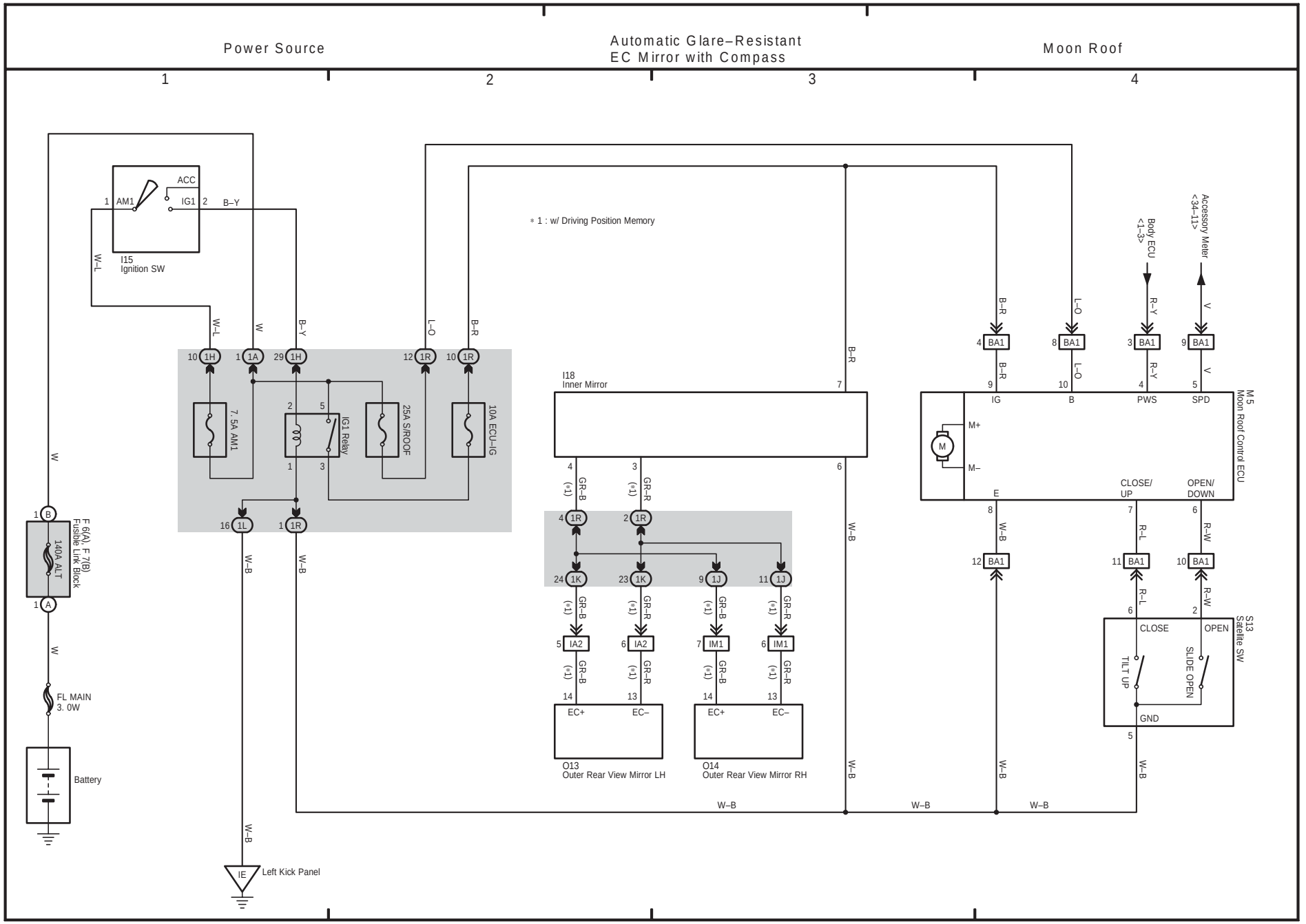
Power Source
Automatic Glare–Resistant EC Mirror with Compass
Moon Roof
1
2
3
4
* 1 : w/ Driving Position Memory
I15 Ignition SW
ACC
AM1
IG1
B–Y
W–L
7.5A AM1
IG1 Relay
25A S/ROOF
10A ECU–IG
F 6(A), F 7(B) Fusible Link Block
140A ALT
FL MAIN 3.0W
Battery
IE
Left Kick Panel
I18 Inner Mirror
O13 Outer Rear View Mirror LH
O14 Outer Rear View Mirror RH
Body ECU <1–3>
Accessory Meter <34–11>
M5 Moon Roof Control ECU
IG
B
PWS
SPD
CLOSE/ UP
OPEN/ DOWN
S13 Satellite SW
CLOSE
OPEN
TILT UP
SLIDE OPEN
GND

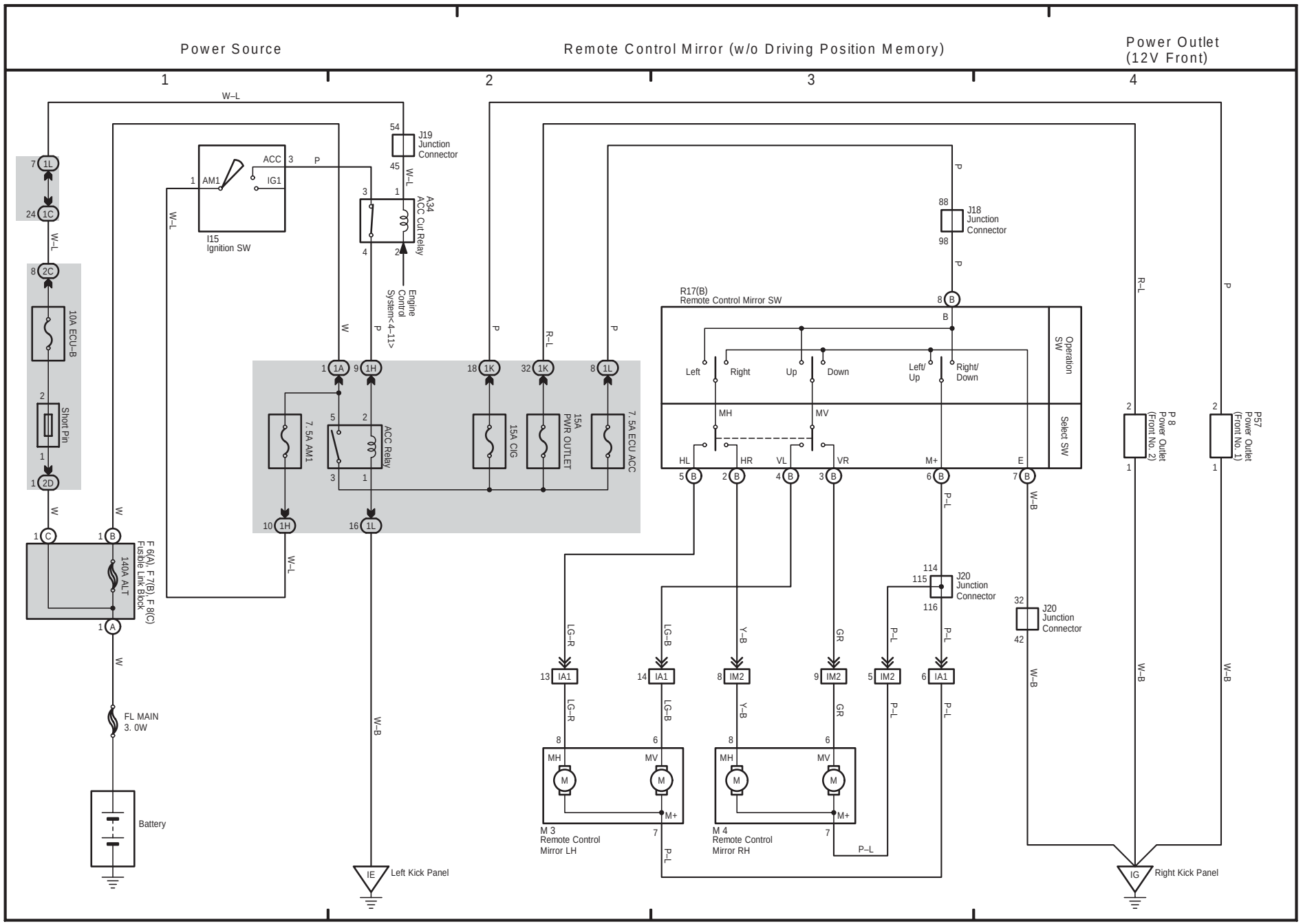
Power Source
Remote Control Mirror (w/o Driving Position Memory)
Power Outlet (12V Front)
1
2
3
4
W–L
J19 Junction Connector
54
45
W–L
ACC
IG1
AM1
I15 Ignition SW
A34 ACC Cut Relay
Engine Control System<4–11>
J18 Junction Connector
88
98
R17(B) Remote Control Mirror SW
Left
Right
Up
Down
Left/ Up
Right/ Down
Operation SW
Select SW
MH
MV
HL
HR
VL
VR
M+
E
P 8 Power Outlet (Front No. 2)
P57 Power Outlet (Front No. 1)
R–L
P
10A ECU–B
Short Pin
7. 5A AM1
ACC Relay
15A CIG
15A PWR OUTLET
7. 5A ECU ACC
F 6(A) F 7(B) F 8(C) Fusible Link Block
140A ALT
FL MAIN 3. 0W
Battery
IE
Left Kick Panel
IG
Right Kick Panel
J20 Junction Connector
114
115
116
32
42
LG–R
LG–B
Y–B
GR
P–L
W–B
IA1
IM2
M 3 Remote Control Mirror LH
M 4 Remote Control Mirror RH
M

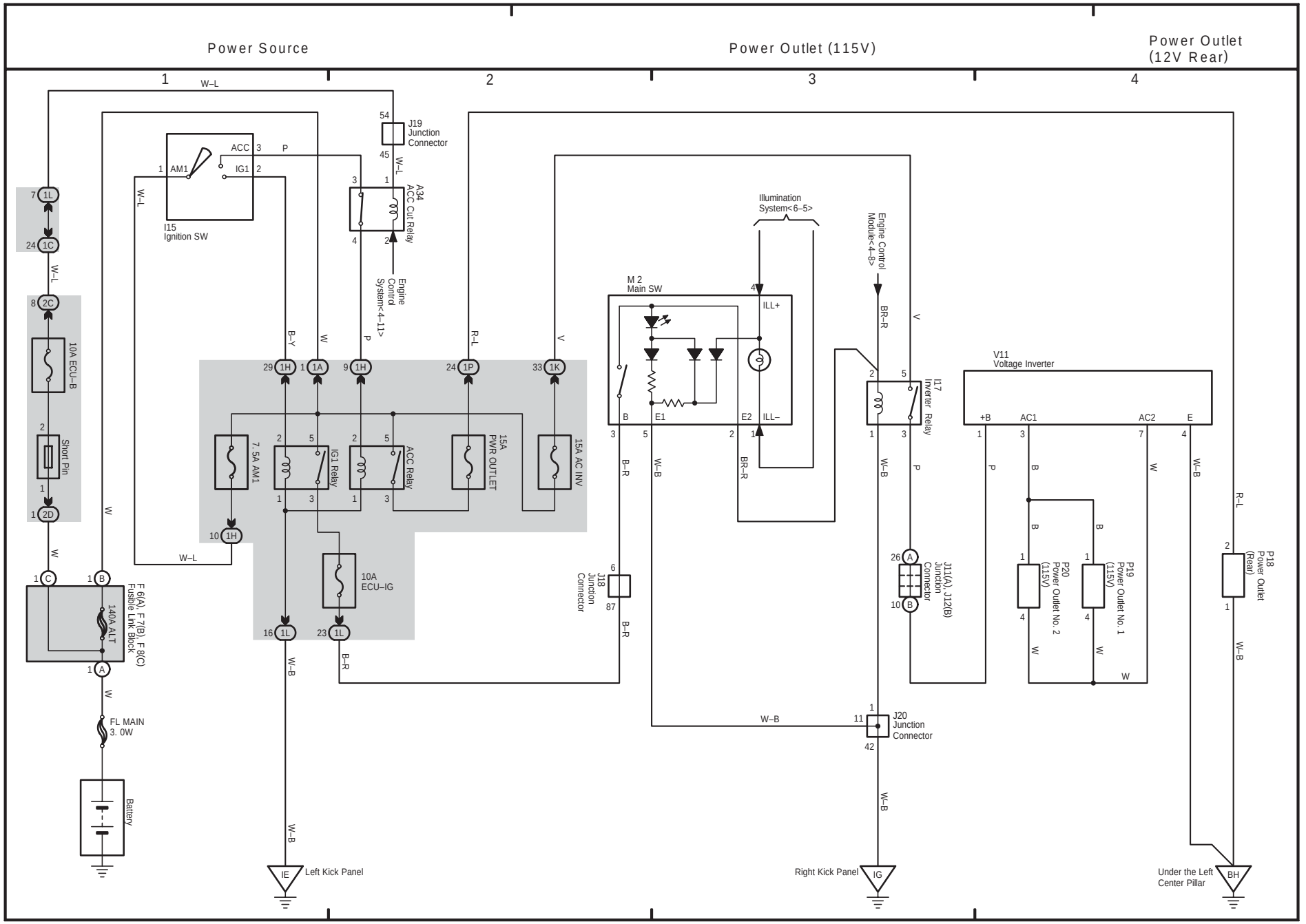
Power Source
Power Outlet (115V)
Power Outlet (12V Rear)
1
2
3
4
W–L
J19 Junction Connector
54
45
ACC
IG1
AM1
P
I15 Ignition SW
A34 ACC Cut Relay
Engine Control System<4–11>
7 1L
24 1C
8 2C
10A ECU–B
2
Short Pin
1
1 2D
W
W–L
B–Y
R–L
V
P
29 1H
1 1A
9 1H
24 1P
33 1K
7.5A AM1
IG1 Relay
ACC Relay
15A PWR OUTLET
15A AC INV
10 1H
10A ECU–IG
16 1L
23 1L
W–B
B–R
F 6(A), F 7(B), F 8(C) Fusible Link Block
140A ALT
1 A
1 B
1 C
FL MAIN 3. 0W
Battery
IE
Left Kick Panel
Illumination System<6–5>
M 2 Main SW
4
ILL+
B
E1
E2
ILL–
3
5
2
1
6 J18 Junction Connector
87
Engine Control Module<4–8>
BR–R
V
I17 Inverter Relay
2
5
1
3
W–B
P
J11(A), J12(B) Junction Connector
26 A
10 B
J20 Junction Connector
1
11
42
Right Kick Panel
IG
V11 Voltage Inverter
+B
AC1
AC2
E
7
4
B
W
P20 Power Outlet No. 2 (115V)
P19 Power Outlet No. 1 (115V)
P18 Power Outlet (Rear)
2
1
Under the Left Center Pillar
BH

27 SIENNA

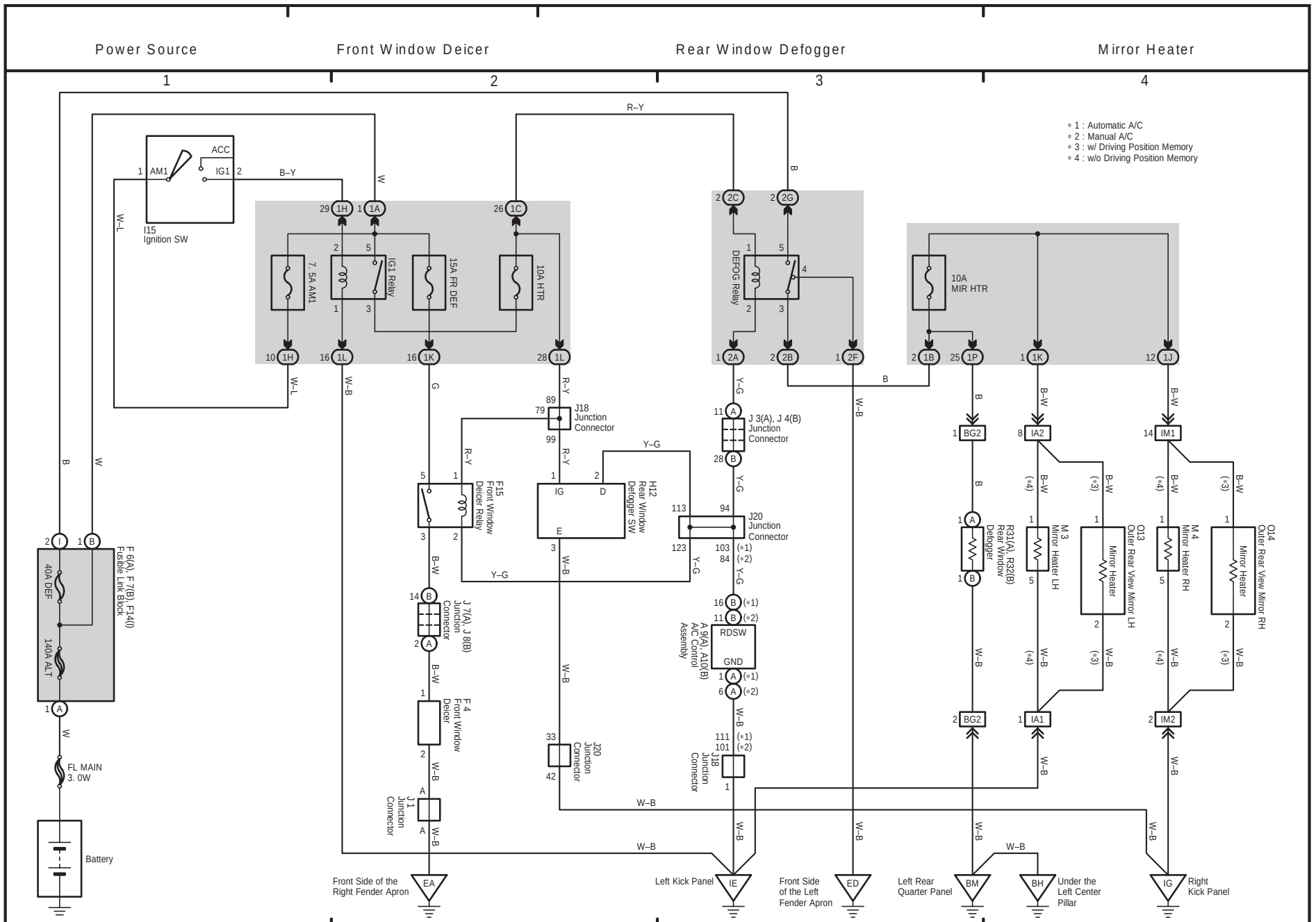
Power Source
Front Window Deicer
Rear Window Defogger
Mirror Heater
1
2
3
4
* 1 : Automatic A/C
* 2 : Manual A/C
* 3 : w/ Driving Position Memory
* 4 : w/o Driving Position Memory
ACC
IG1
AM1
I15
Ignition SW
7. 5A AM1
IG1 Relay
15A FR DEF
10A HTR
DEFOG Relay
10A
MIR HTR
J18
Junction
Connector
J 3(A), J 4(B)
Junction
Connector
J20
Junction
Connector
F15
Front Window
Deicer Relay
H12
Rear Window
Defogger SW
J 7(A), J 8(B)
Junction
Connector
F 4
Front Window
Deicer
J 1
Junction
Connector
A 9(A), A10(B)
A/C Control
Assembly
RDSW
GND
J18
Junction
Connector
J20
Junction
Connector
F 6(A), F 7(B), F14(I)
Fusible Link Block
40A DEF
140A ALT
FL MAIN
3. 0W
Battery
R31(A), R32(B)
Rear Window
Defogger
M 3
Mirror Heater LH
M 4
Mirror Heater RH
O13
Outer Rear View Mirror LH
O14
Outer Rear View Mirror RH
Mirror Heater
Front Side of the
Right Fender Apron
Left Kick Panel
Front Side
of the Left
Fender Apron
Left Rear
Quarter Panel
Under the
Left Center
Pillar
Right
Kick Panel
EA
IE
ED
BM
BH
IG

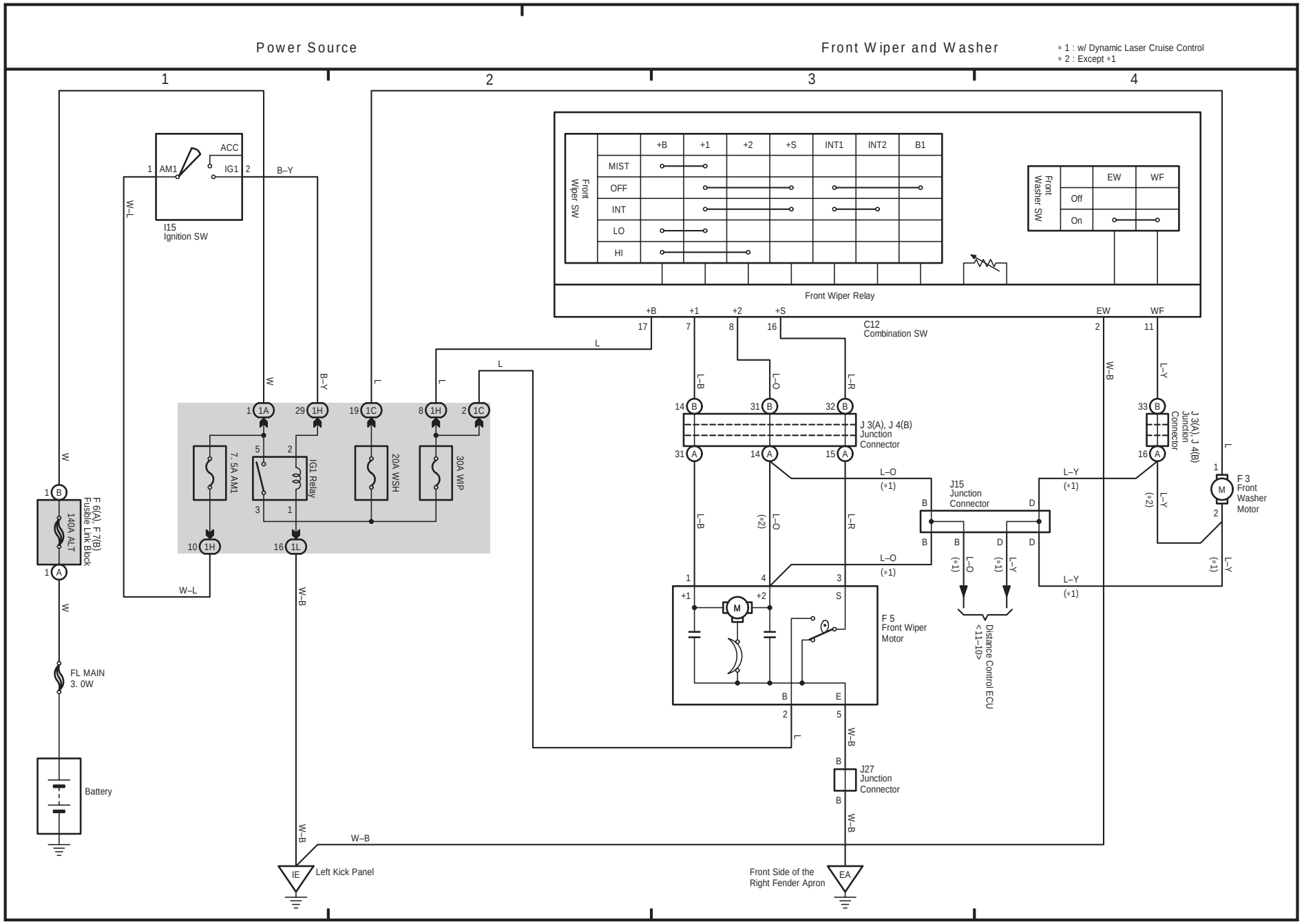
Power Source
Front Wiper and Washer
* 1 : w/ Dynamic Laser Cruise Control
* 2 : Except *1
1
2
3
4
ACC
AM1
IG1
B–Y
W–L
I15
Ignition SW
+B
+1
+2
+S
INT1
INT2
B1
MIST
OFF
INT
LO
HI
Front Wiper SW
EW
WF
Off
On
Front Washer SW
Front Wiper Relay
C12
Combination SW
7. 5A AM1
IG1 Relay
20A WSH
30A WIP
F 6(A), F 7(B)
Fusible Link Block
140A ALT
FL MAIN
3. 0W
Battery
J 3(A), J 4(B)
Junction
Connector
J15
Junction
Connector
J 3(A), J 4(B)
Junction
Connector
F 3
Front
Washer
Motor
F 5
Front Wiper
Motor
Distance Control ECU
<11–10>
J27
Junction
Connector
IE
Left Kick Panel
Front Side of the
Right Fender Apron
EA
W
W–B
L
L–B
L–O
L–R
L–Y
(*1)
(*2)

29 SIENNA

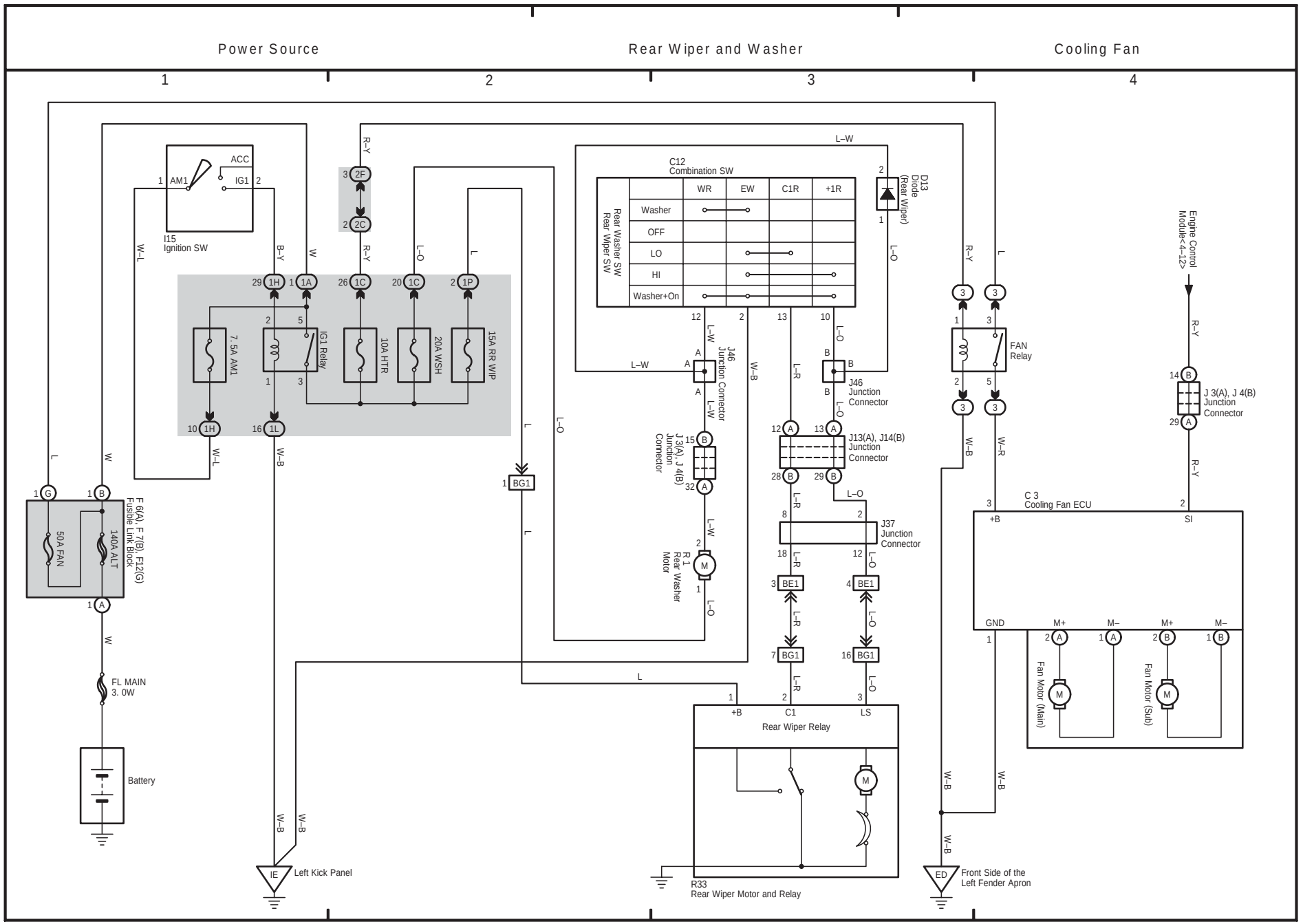
Power Source
Rear Wiper and Washer
Cooling Fan
1
2
3
4
ACC
AM1
IG1
I15
Ignition SW
7. 5A AM1
IG1 Relay
10A HTR
20A WSH
15A RR WIP
C12
Combination SW
Rear Washer SW
Rear Wiper SW
WR
EW
C1R
+1R
Washer
OFF
LO
HI
Washer+On
D13
Diode
(Rear Wiper)
J46
Junction Connector
J13(A), J14(B)
Junction Connector
J37
Junction Connector
J 3(A), J 4(B)
Junction Connector
R 1
Rear Washer Motor
Rear Wiper Relay
+B
C1
LS
R33
Rear Wiper Motor and Relay
FAN
Relay
Engine Control Module<4–12>
C 3
Cooling Fan ECU
+B
SI
GND
M+
M–
Fan Motor (Main)
Fan Motor (Sub)
F 6(A), F 7(B), F12(G)
Fusible Link Block
50A FAN
140A ALT
FL MAIN
3. 0W
Battery
IE
Left Kick Panel
ED
Front Side of the
Left Fender Apron

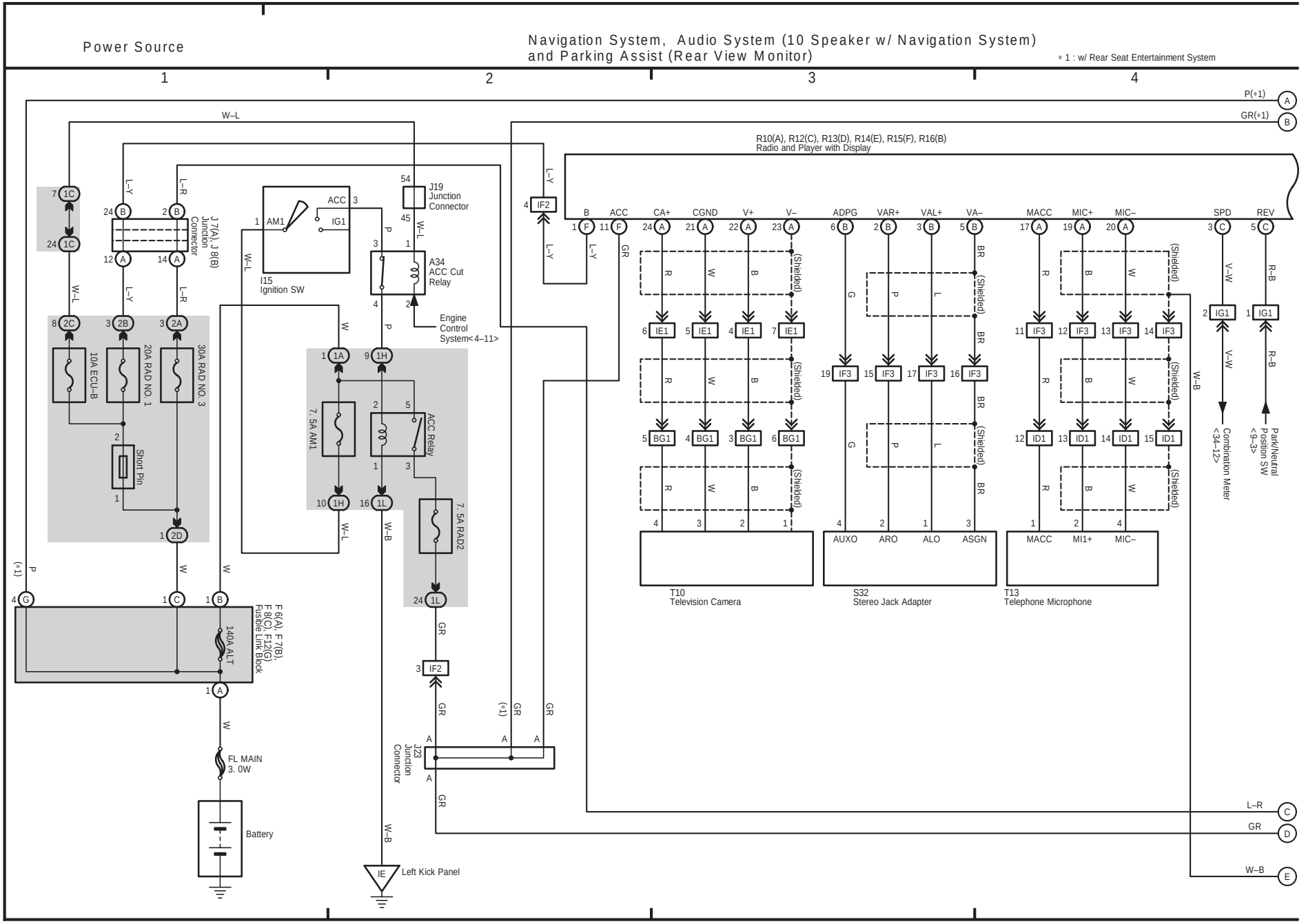
Power Source
Navigation System, Audio System (10 Speaker w/ Navigation System) and Parking Assist (Rear View Monitor)
∗ 1 : w/ Rear Seat Entertainment System
1
2
3
4
P(∗1)
GR(∗1)
W–L
R10(A), R12(C), R13(D), R14(E), R15(F), R16(B)
Radio and Player with Display
J7(A), J8(B) Junction Connector
J19 Junction Connector
A34 ACC Cut Relay
I15 Ignition SW
Engine Control System< 4–11>
10A ECU–B
20A RAD NO. 1
30A RAD NO. 3
Short Pin
7. 5A AM1
ACC Relay
7. 5A RAD2
140A ALT
F 6(A), F 7(B), F 8(C), F12(G) Fusible Link Block
FL MAIN 3. 0W
Battery
J23 Junction Connector
IE Left Kick Panel
T10 Television Camera
S32 Stereo Jack Adapter
T13 Telephone Microphone
Combination Meter <34–12>
Park/Neutral Position SW <9–3>
(Shielded)
L–R
GR
W–B

(Cont. next page)

Navigation System, Audio System (10 Speaker w/ Navigation System) and Parking Assist (Rear View Monitor)

∗1 : w/ Rear Seat Entertainment System

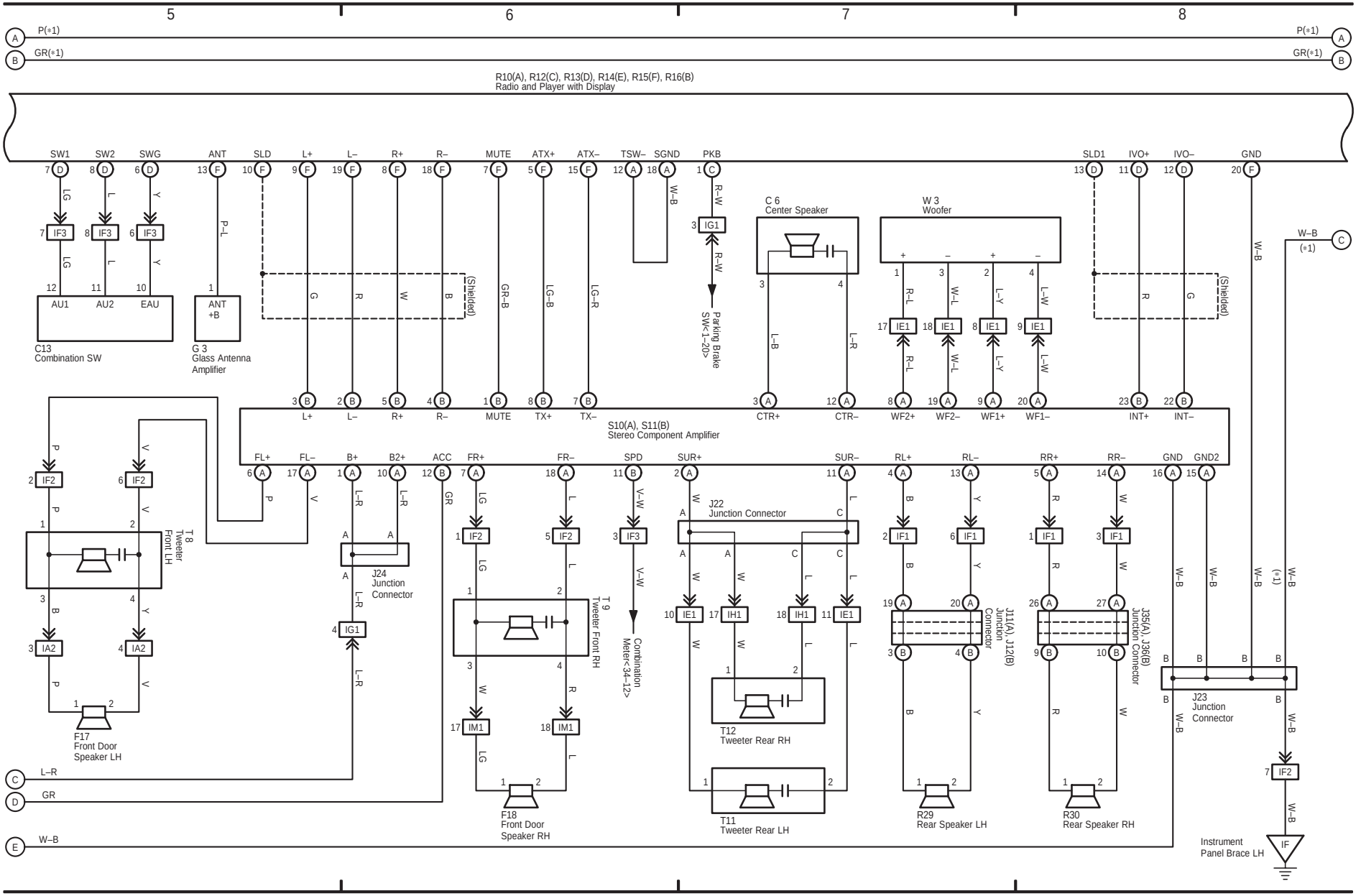

30 SIENNA (Cont' d)

Navigation System, Audio System (10 Speaker w/ Navigation System) and Parking Assist (Rear View Monitor)

∗ 1 : w/ Rear Seat Entertainment System

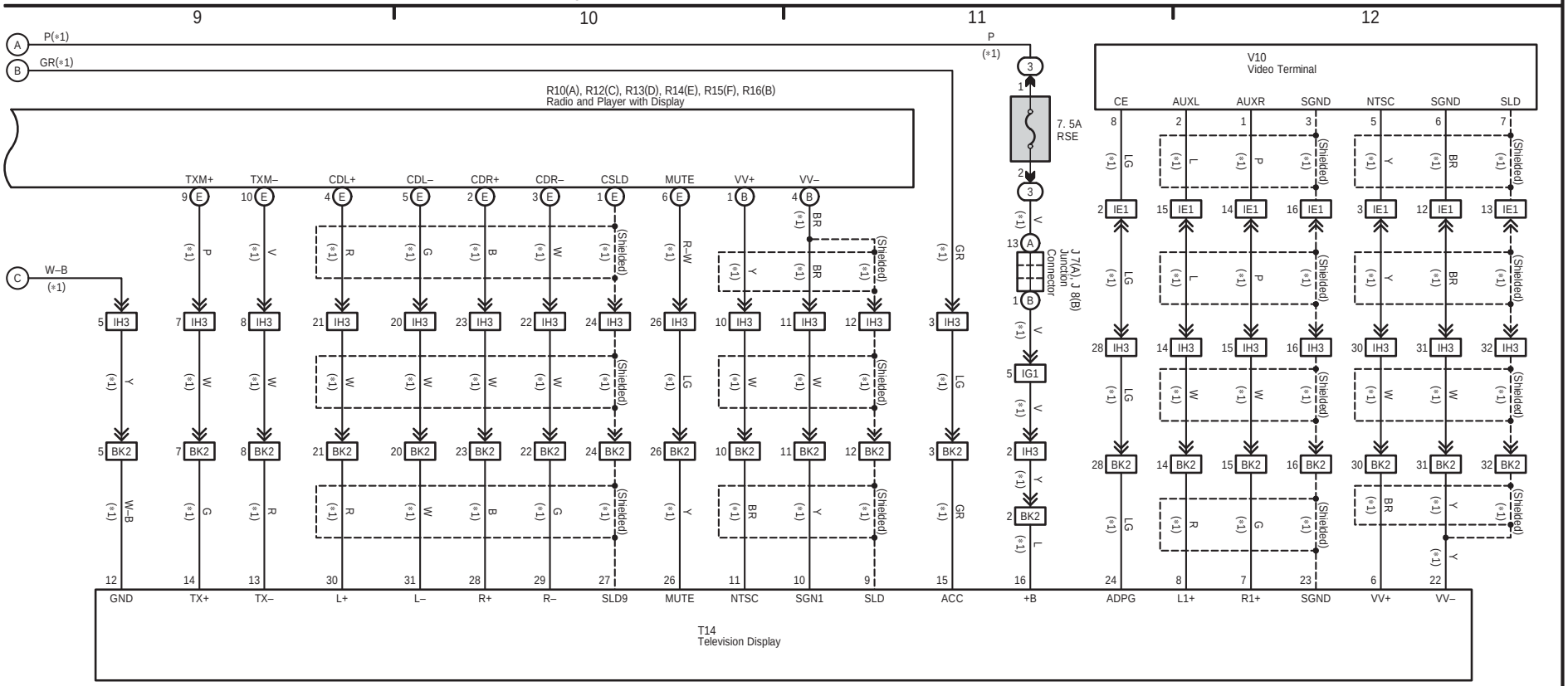

31 SIENNA

(Cont. next page)

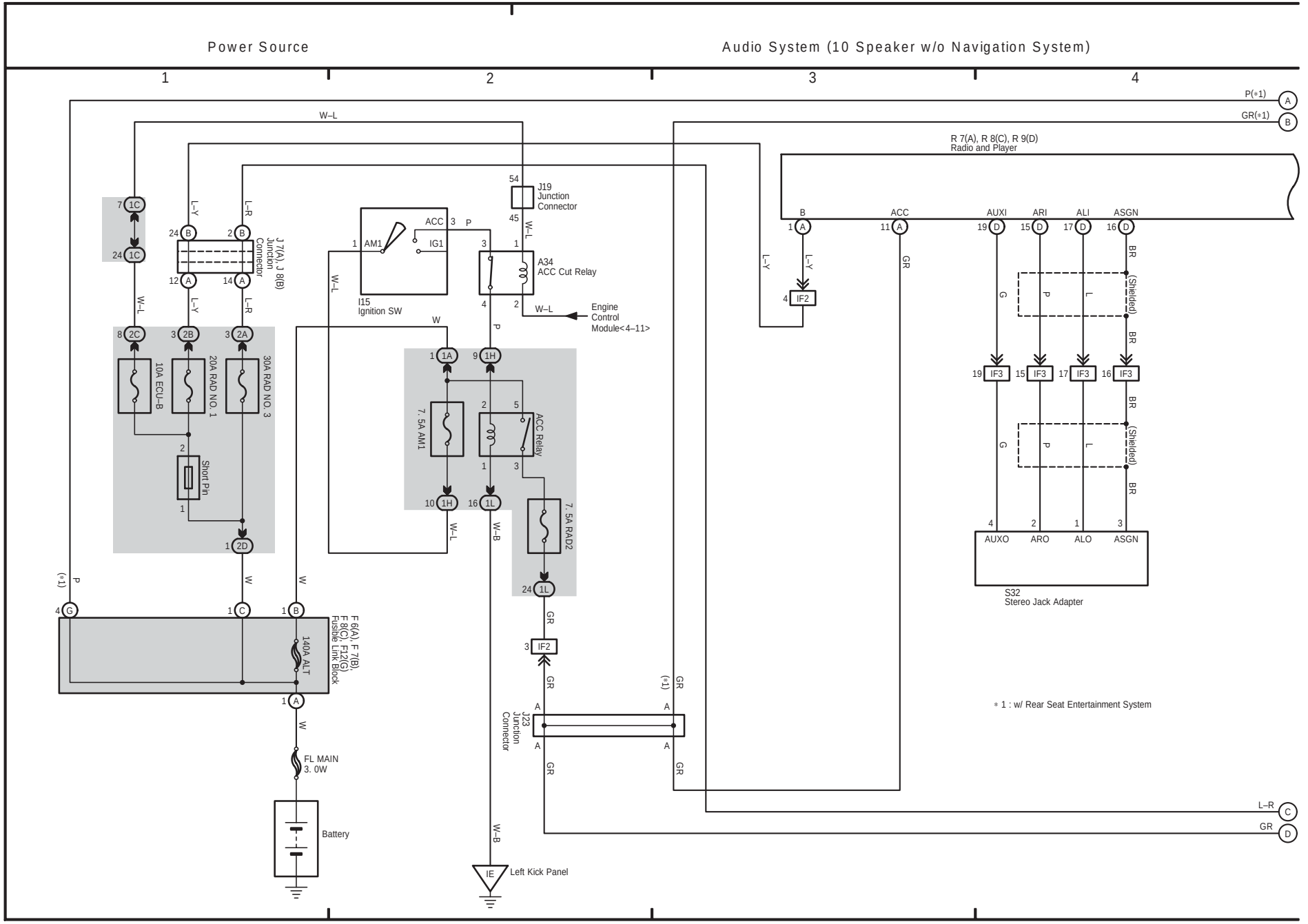

(Cont. next page)

Audio System (10 Speaker w/o Navigation System)

∗ 1 : w/ Rear Seat Entertainment System

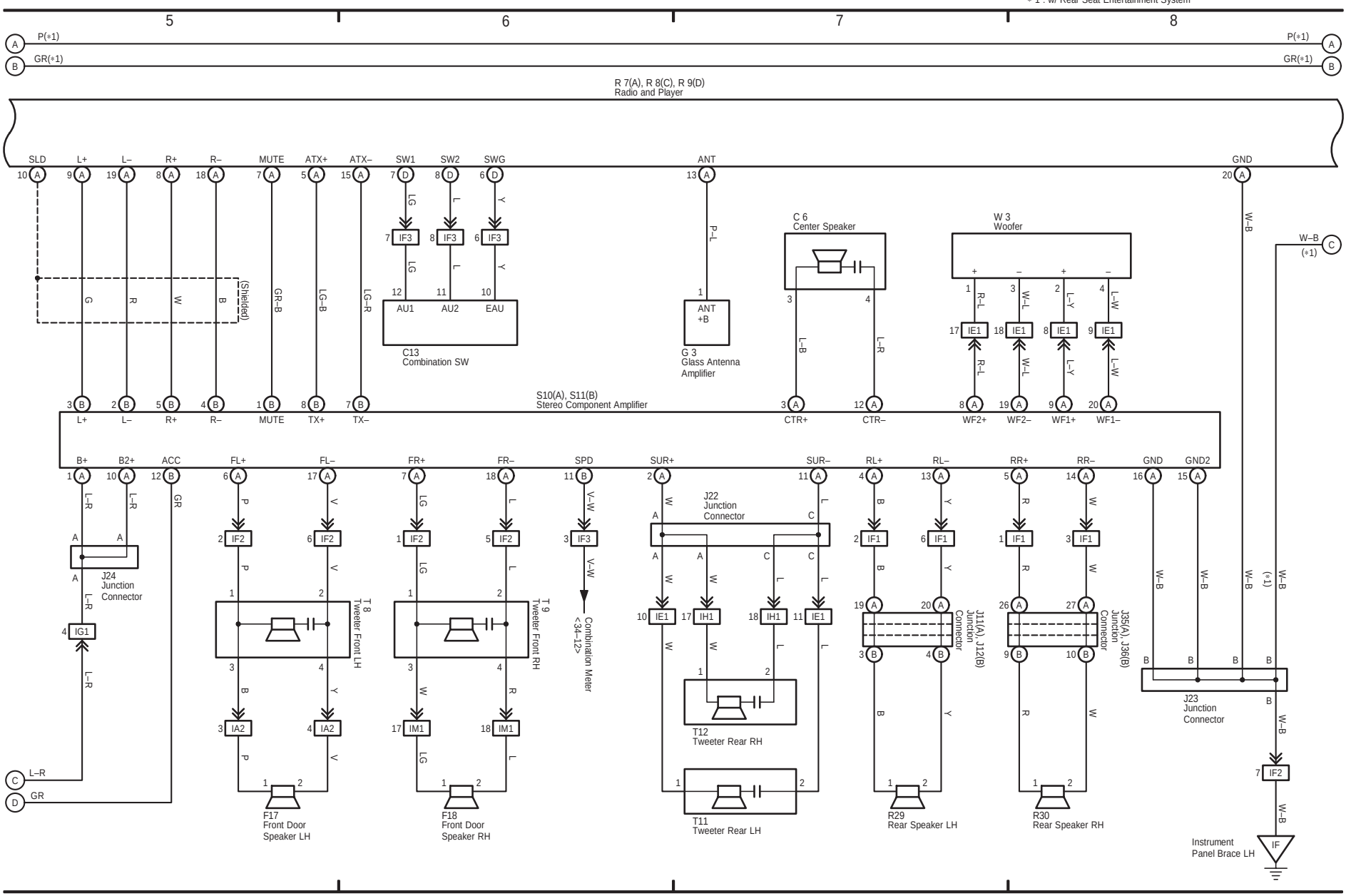

31 SIENNA (Cont' d)

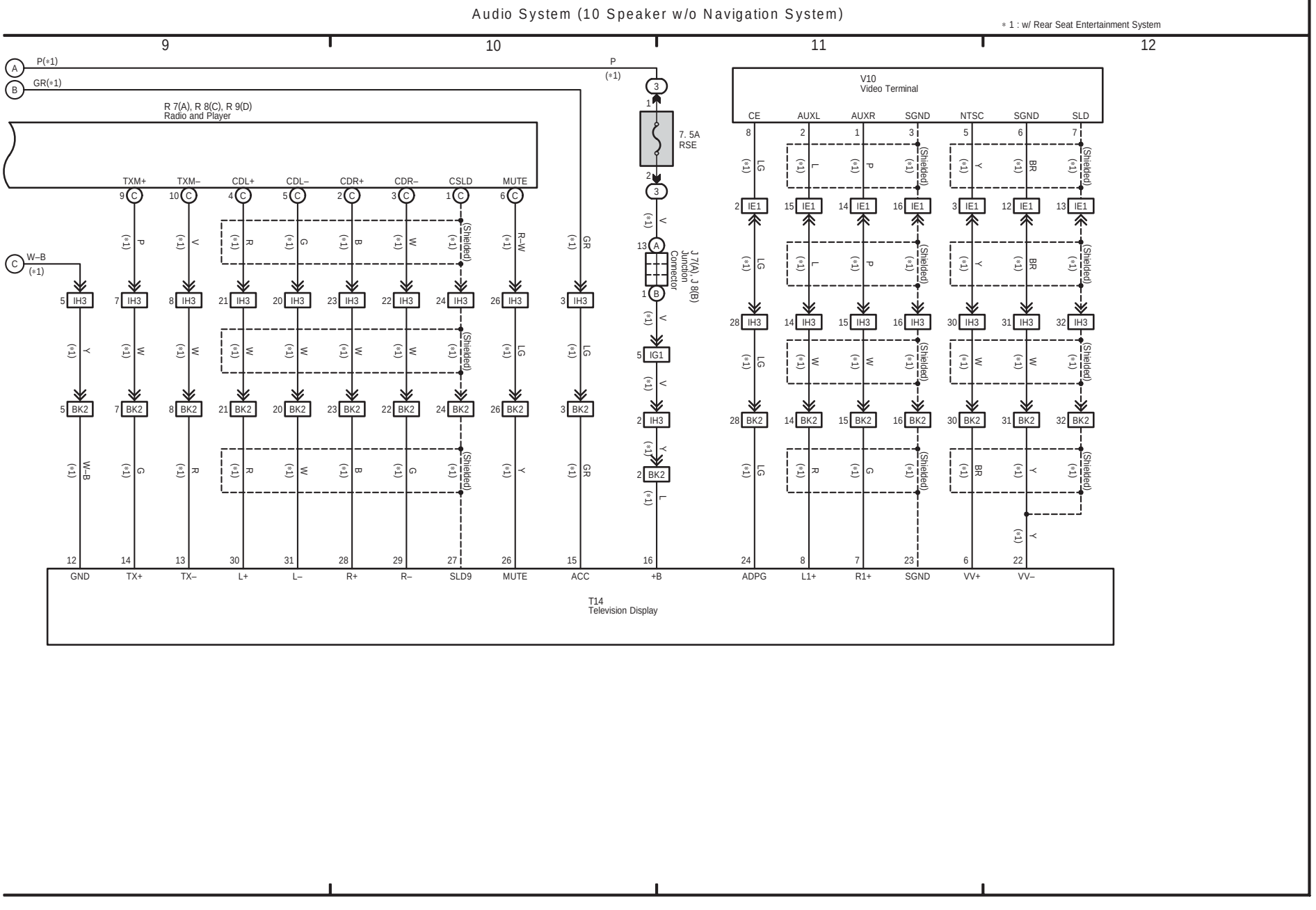

32 SIENNA

(Cont. next page)

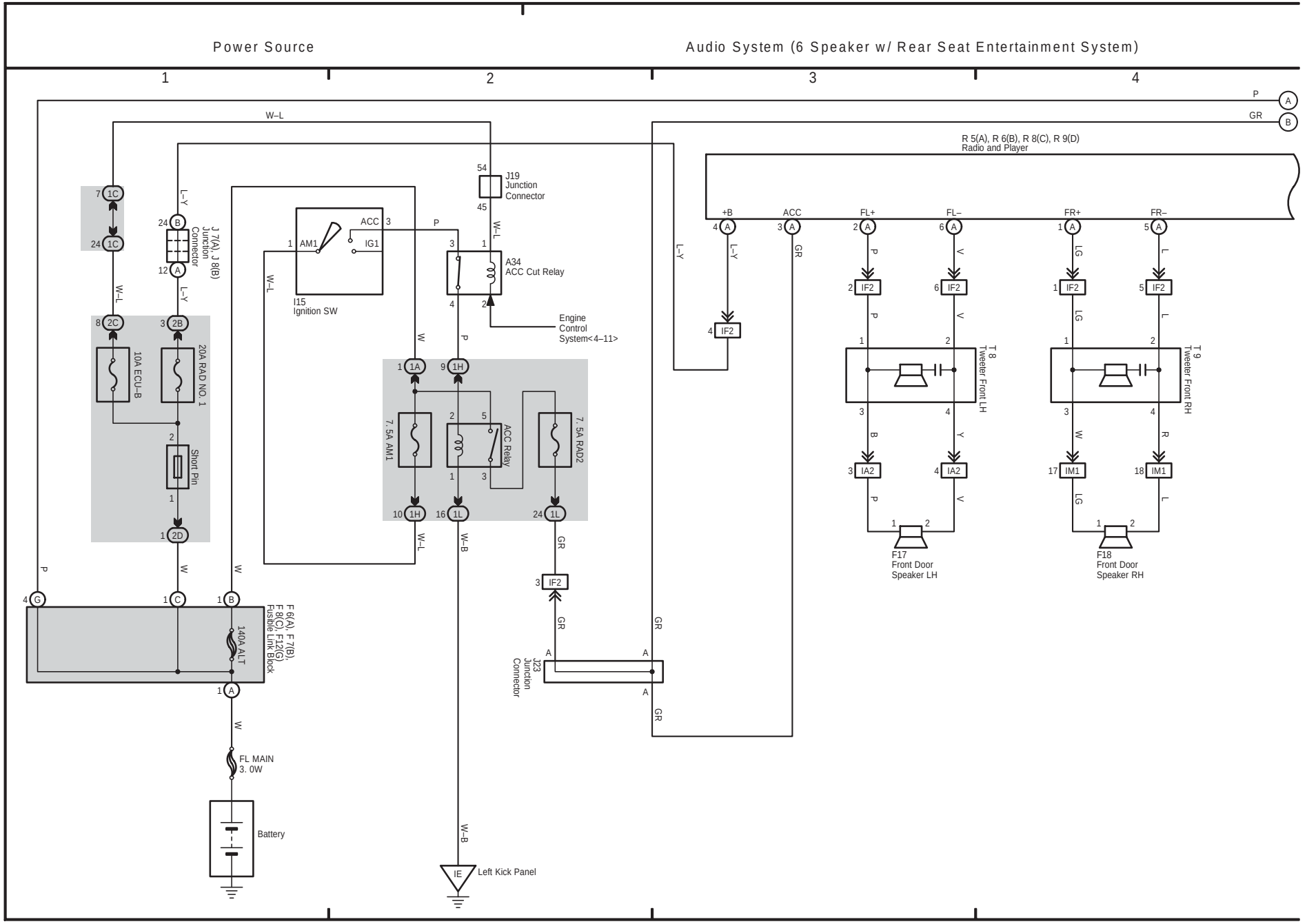

(Cont. next page)

Audio System (6 Speaker w/ Rear Seat Entertainment System)

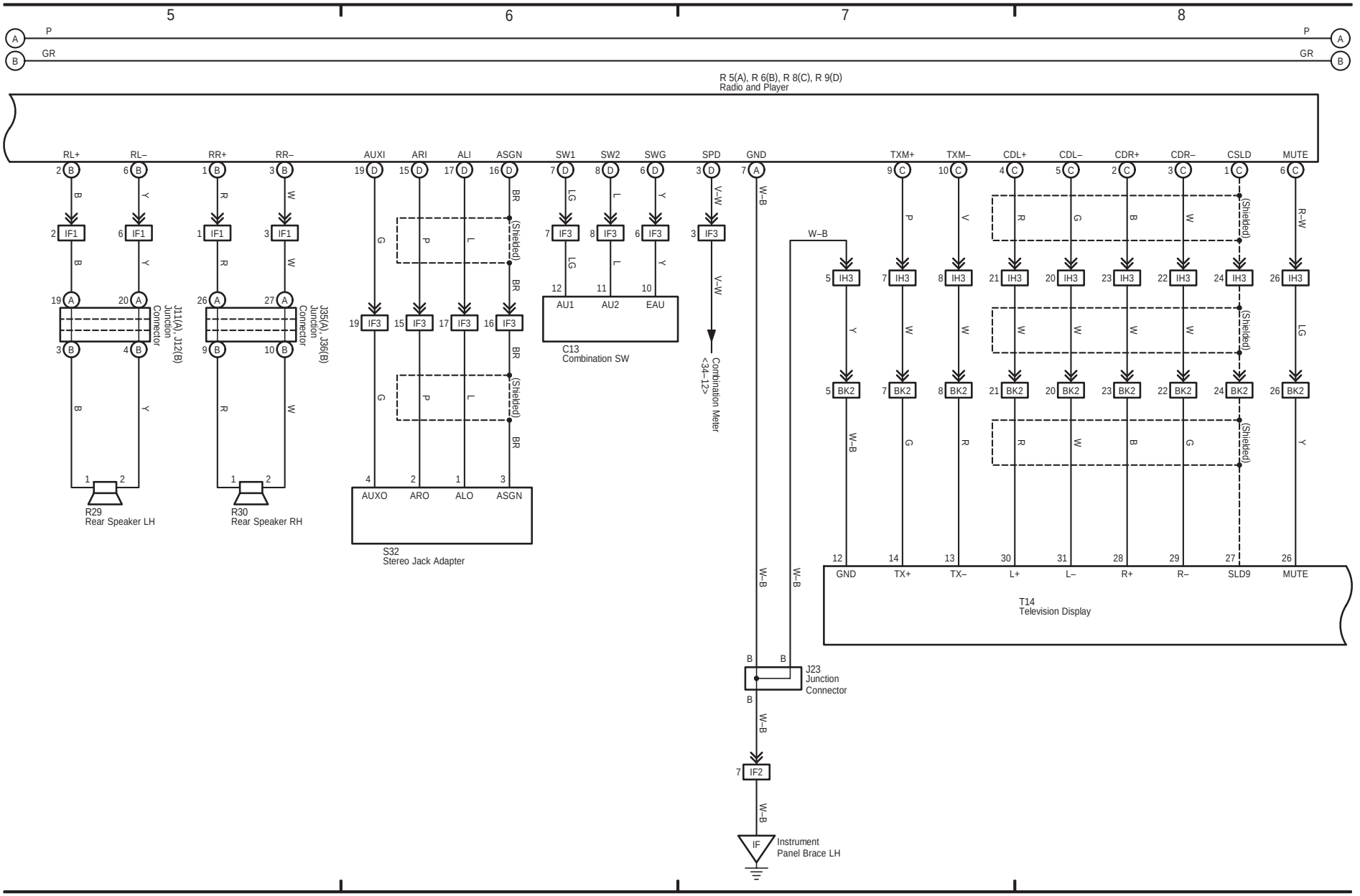

32 SIENNA (Cont' d)

Audio System (6 Speaker w/ Rear Seat Entertainment System)

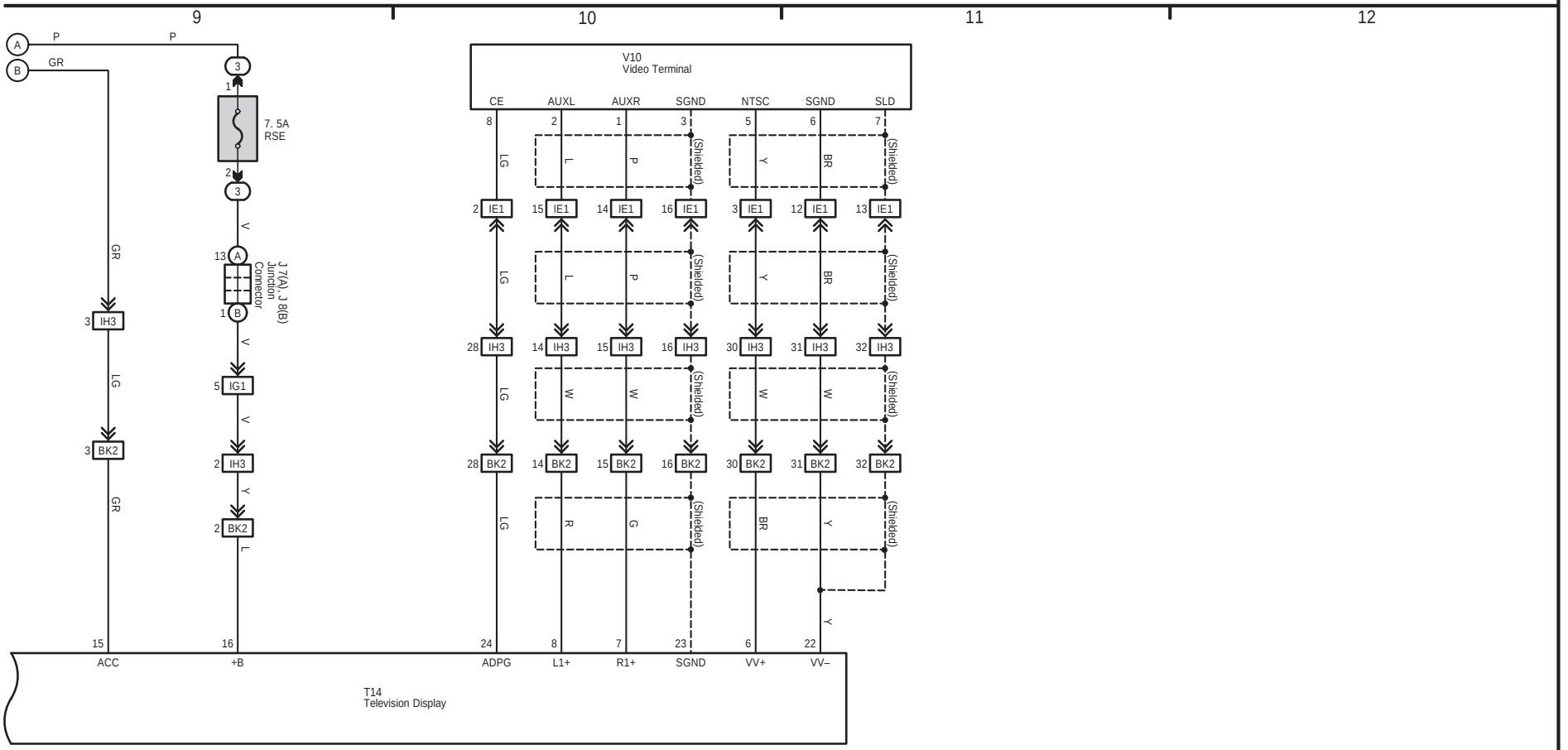

33 SIENNA

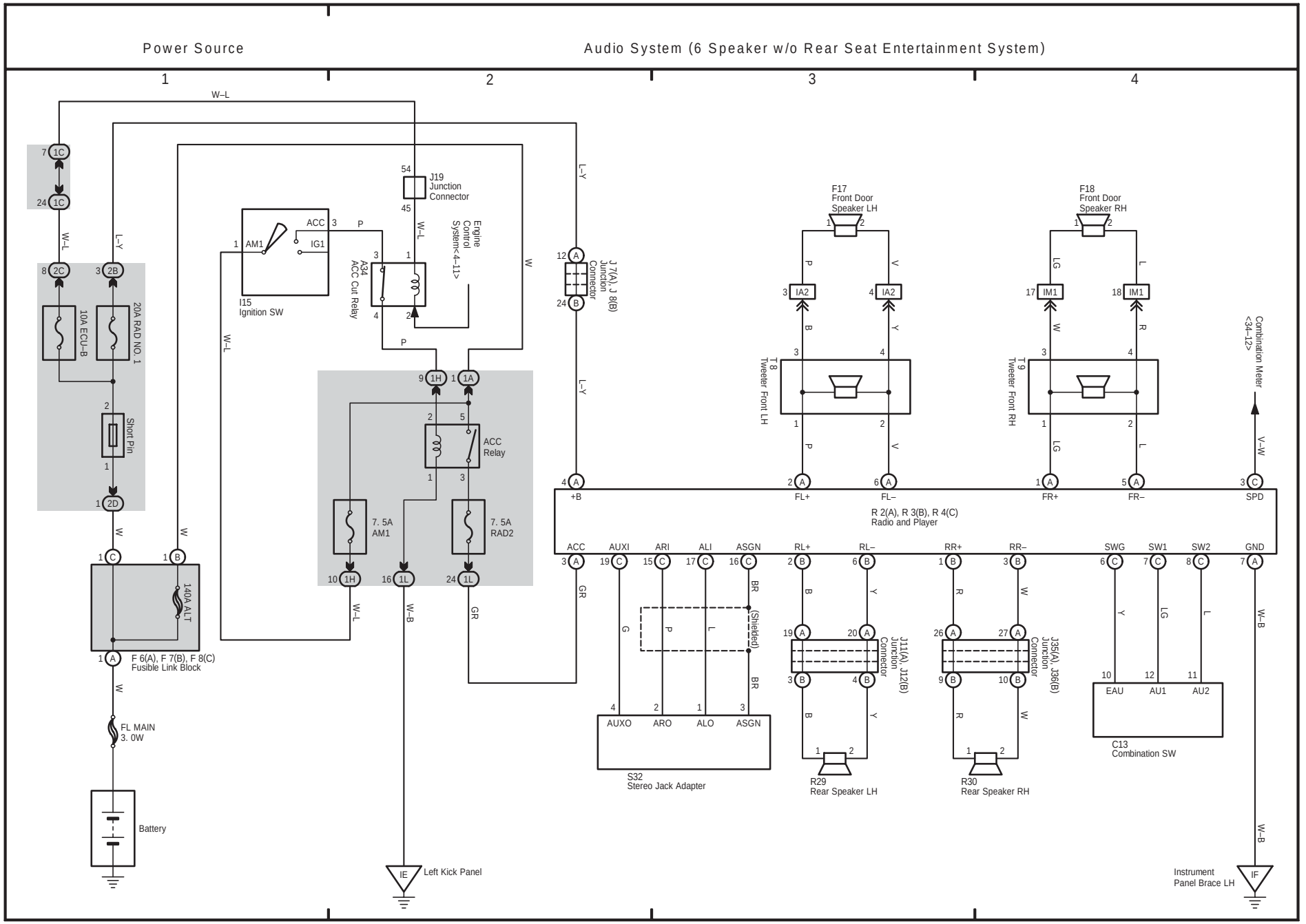
Power Source
Audio System (6 Speaker w/o Rear Seat Entertainment System)
1
2
3
4
W–L
L–Y
J19
Junction
Connector
Engine
Control
System<4–11>
ACC
IG1
AM1
I15
Ignition SW
A34
ACC Cut Relay
J 7(A), J 8(B)
Junction
Connector
10A ECU–B
20A RAD NO. 1
Short Pin
ACC
Relay
7. 5A
AM1
7. 5A
RAD2
140A ALT
F 6(A), F 7(B), F 8(C)
Fusible Link Block
FL MAIN
3. 0W
Battery
IE
Left Kick Panel
F17
Front Door
Speaker LH
F18
Front Door
Speaker RH
T 8
Tweeter Front LH
T 9
Tweeter Front RH
Combination Meter
<34–12>
+B
FL+
FL–
FR+
FR–
SPD
R 2(A), R 3(B), R 4(C)
Radio and Player
ACC
AUXI
ARI
ALI
ASGN
RL+
RL–
RR+
RR–
SWG
SW1
SW2
GND
(Shielded)
AUXO
ARO
ALO
ASGN
S32
Stereo Jack Adapter
J11(A), J12(B)
Junction
Connector
J35(A), J36(B)
Junction
Connector
R29
Rear Speaker LH
R30
Rear Speaker RH
EAU
AU1
AU2
C13
Combination SW
Instrument
Panel Brace LH
IF

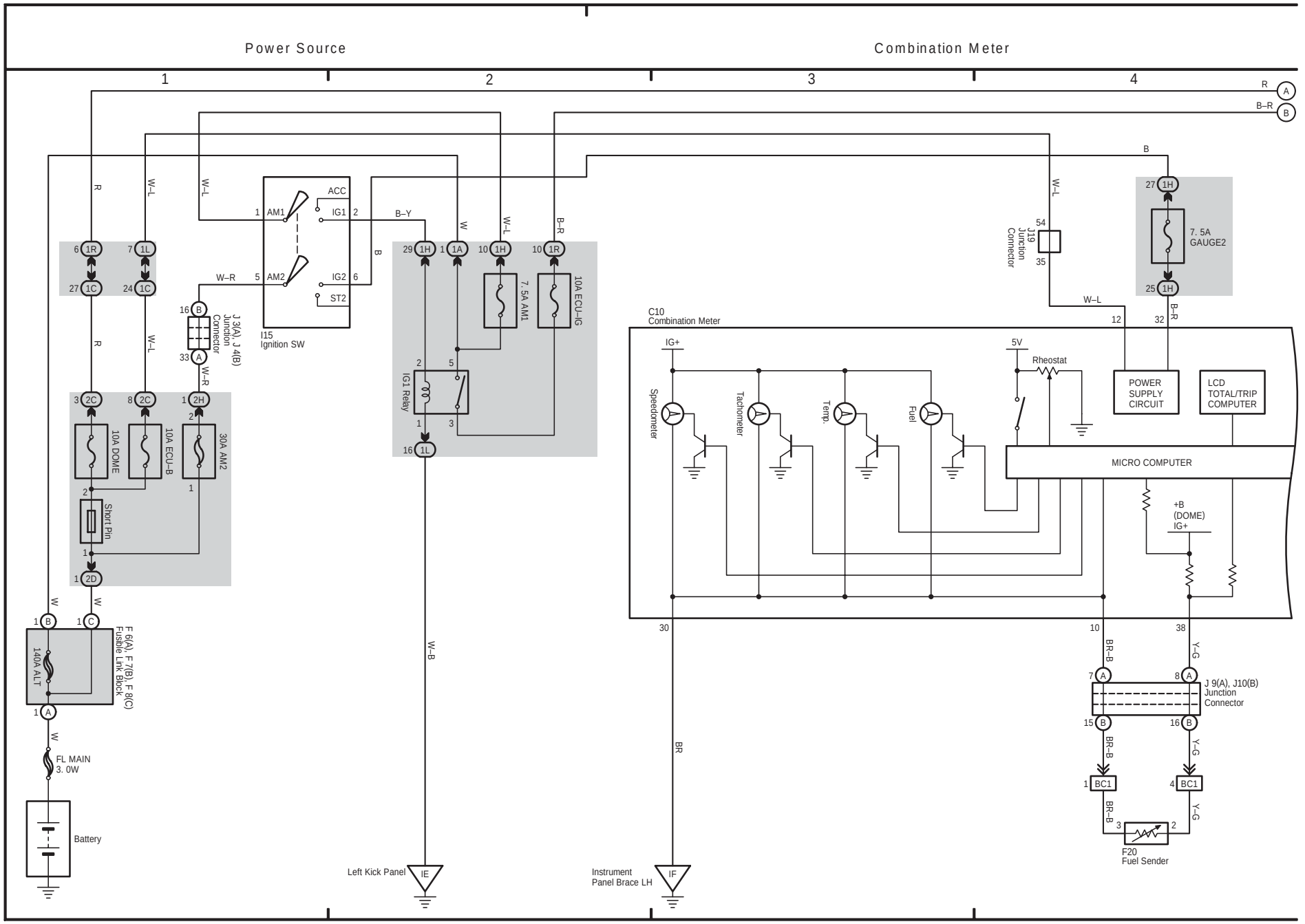
Power Source
Combination Meter
1
2
3
4
R
B–R
B
W–L
W–R
B–Y
W
B
R
ACC
IG1
IG2
ST2
AM1
AM2
I15
Ignition SW
J 3(A), J 4(B)
Junction
Connector
7. 5A AM1
10A ECU–IG
IG1 Relay
10A DOME
10A ECU–B
30A AM2
Short Pin
F 6(A), F 7(B), F 8(C)
Fusible Link Block
140A ALT
FL MAIN
3. 0W
Battery
W–B
BR
Left Kick Panel
IE
Instrument
Panel Brace LH
IF
J19
Junction
Connector
7. 5A
GAUGE2
C10
Combination Meter
IG+
5V
Rheostat
Speedometer
Tachometer
Temp.
Fuel
POWER
SUPPLY
CIRCUIT
LCD
TOTAL/TRIP
COMPUTER
MICRO COMPUTER
+B
(DOME)
IG+
BR–B
Y–G
J 9(A), J10(B)
Junction
Connector
BC1
F20
Fuel Sender

34 SIENNA (Cont' d)

(Cont. next page)

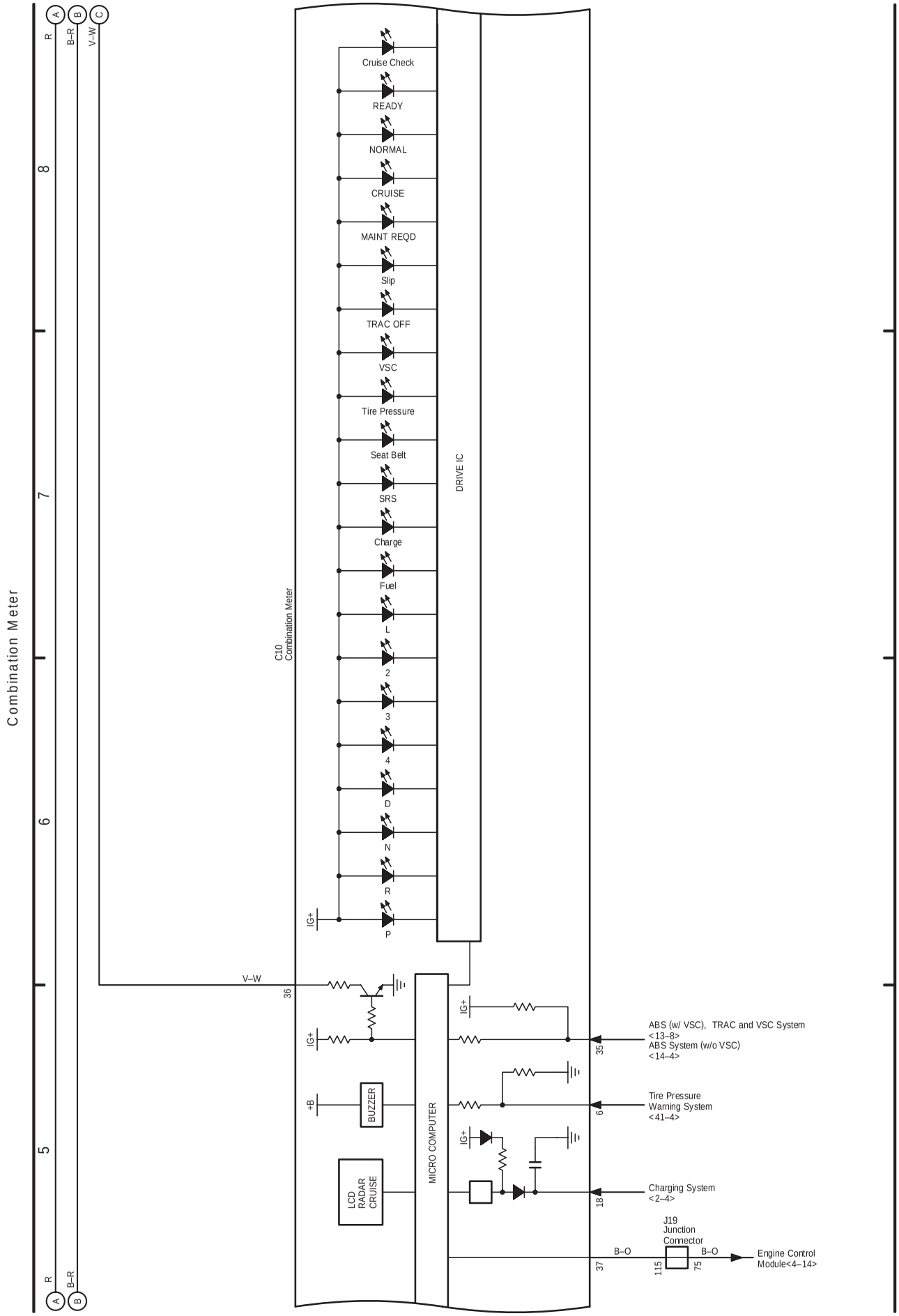

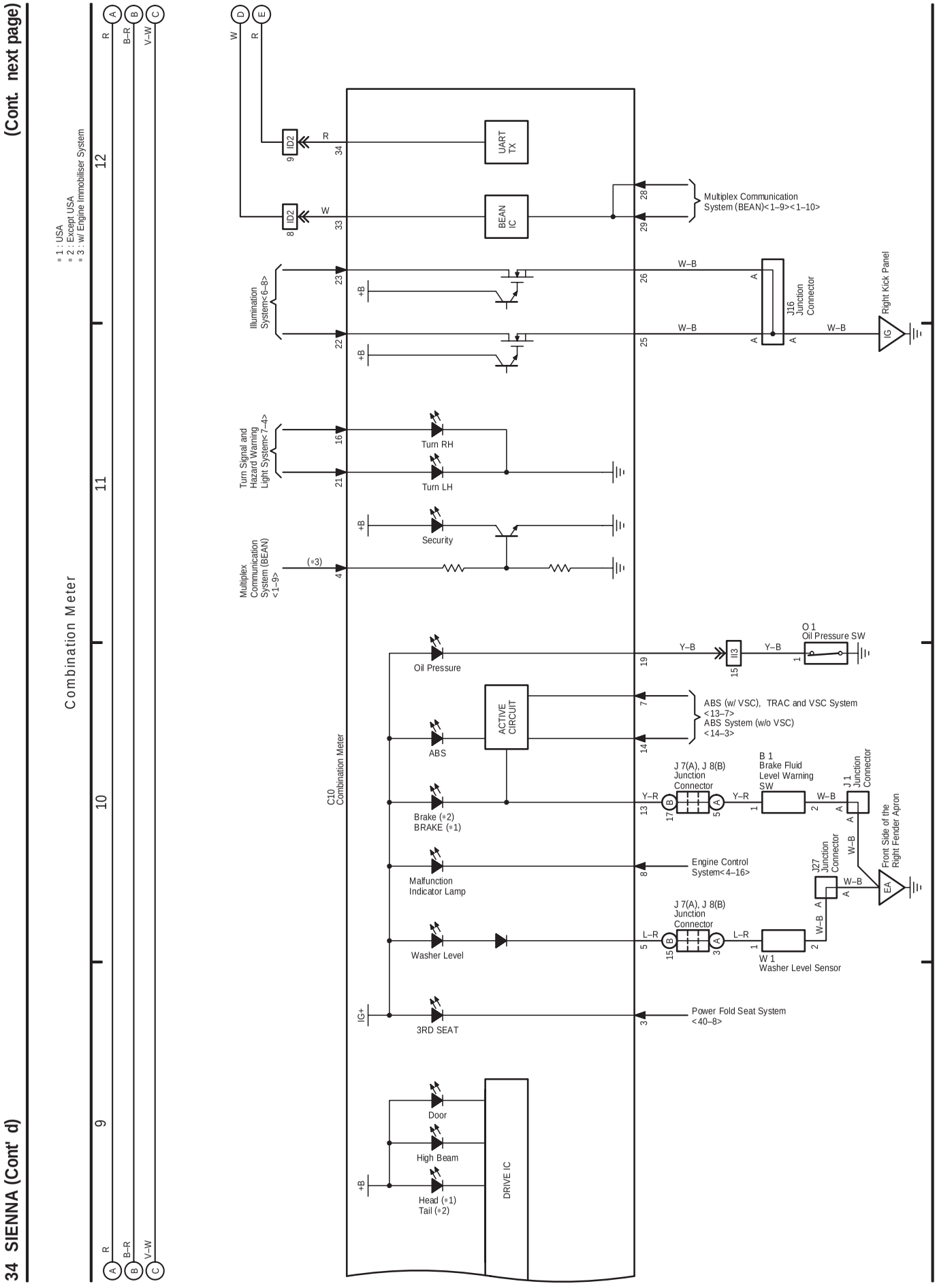
(Cont. next page)
34 SIENNA (Cont' d)
* 1 : USA
* 2 : Except USA
* 3 : w/ Engine Immobiliser System
Combination Meter
C10 Combination Meter
UART TX
BEAN IC
ACTIVE CIRCUIT
DRIVE IC
Multiplex Communication System (BEAN)<1–9><1–10>
Illumination System<6–8>
Turn Signal and Hazard Warning Light System<7–4>
Turn RH
Turn LH
Security
Multiplex Communication System (BEAN) <1–9>
Oil Pressure
O 1 Oil Pressure SW
ABS (w/ VSC), TRAC and VSC System <13–7>
ABS System (w/o VSC) <14–3>
ABS
Brake (*2)
BRAKE (*1)
J 7(A), J 8(B) Junction Connector
B 1 Brake Fluid Level Warning SW
J 1 Junction Connector
Front Side of the Right Fender Apron
Malfunction Indicator Lamp
Engine Control System<4–16>
J27 Junction Connector
Washer Level
W 1 Washer Level Sensor
IG+
3RD SEAT
Power Fold Seat System <40–8>
Door
High Beam
Head (*1)
Tail (*2)
J16 Junction Connector
Right Kick Panel
IG
EA

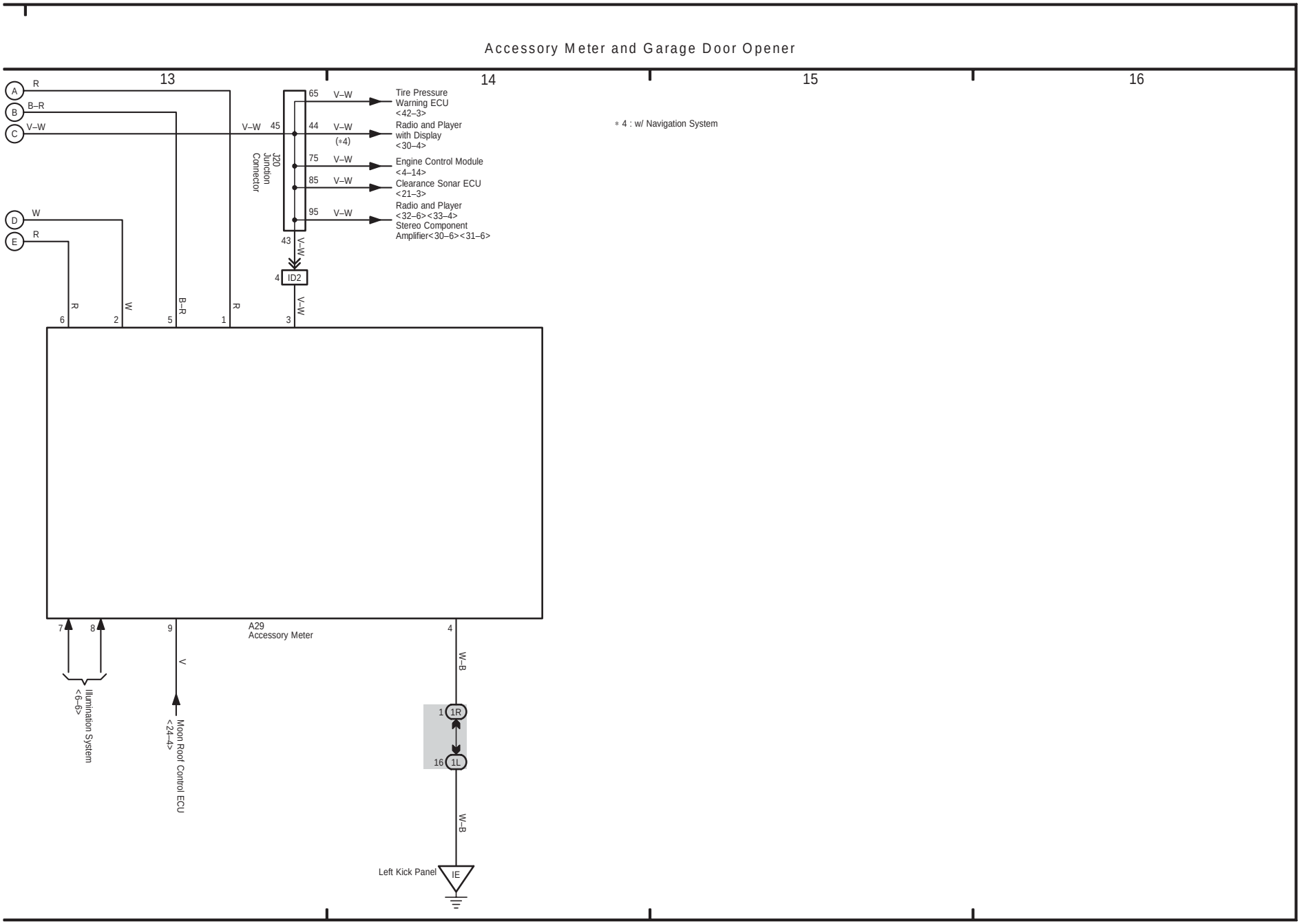
Accessory Meter and Garage Door Opener
13
14
15
16
A
B
C
D
E
R
B–R
V–W
W
R
V–W
45
J20
Junction
Connector
65
V–W
Tire Pressure
Warning ECU
<42–3>
44
V–W
(*4)
Radio and Player
with Display
<30–4>
75
V–W
Engine Control Module
<4–14>
85
V–W
Clearance Sonar ECU
<21–3>
95
V–W
Radio and Player
<32–6><33–4>
Stereo Component
Amplifier<30–6><31–6>
43
V–W
4
ID2
V–W
6
R
2
W
5
B–R
1
R
3
A29
Accessory Meter
7
8
9
4
V
W–B
Illumination System
<6–6>
Moon Roof Control ECU
<24–4>
1
1R
16
1L
W–B
Left Kick Panel
IE
* 4 : w/ Navigation System

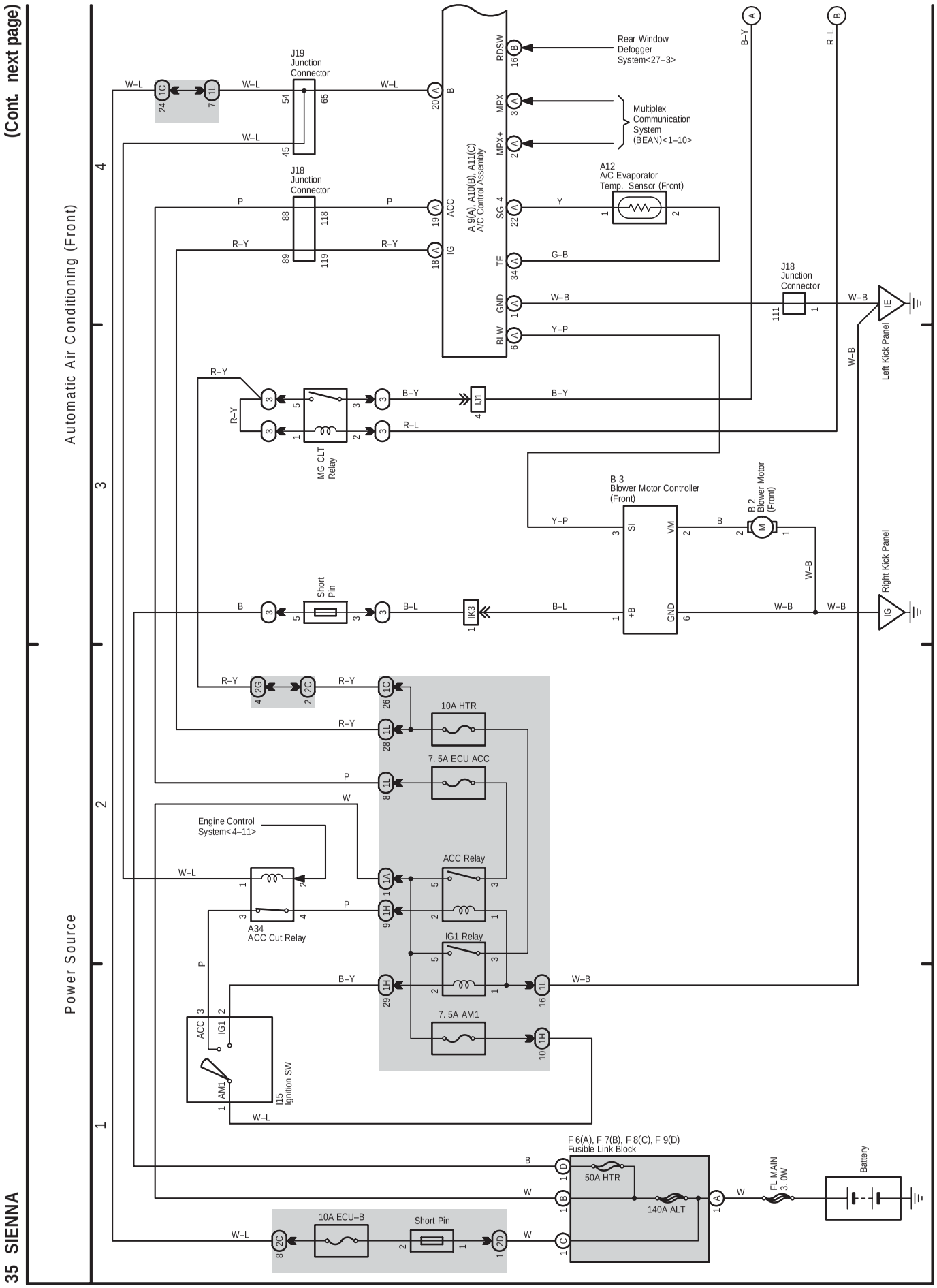
(Cont. next page)
Automatic Air Conditioning (Front)
Power Source
35 SIENNA
J19 Junction Connector
J18 Junction Connector
Rear Window Defogger System<27–3>
Multiplex Communication System (BEAN)<1–10>
A12 A/C Evaporator Temp. Sensor (Front)
A 9(A), A10(B), A11(C) A/C Control Assembly
RDSW
MPX–
MPX+
SG–4
TE
GND
BLW
ACC
IG
J18 Junction Connector
Left Kick Panel
MG CLT Relay
B 3 Blower Motor Controller (Front)
B 2 Blower Motor (Front)
Right Kick Panel
Short Pin
10A HTR
7. 5A ECU ACC
Engine Control System<4–11>
ACC Relay
A34 ACC Cut Relay
IG1 Relay
7. 5A AM1
I15 Ignition SW
F 6(A), F 7(B), F 8(C), F 9(D) Fusible Link Block
50A HTR
140A ALT
FL MAIN 3. 0W
Battery
10A ECU–B
Short Pin

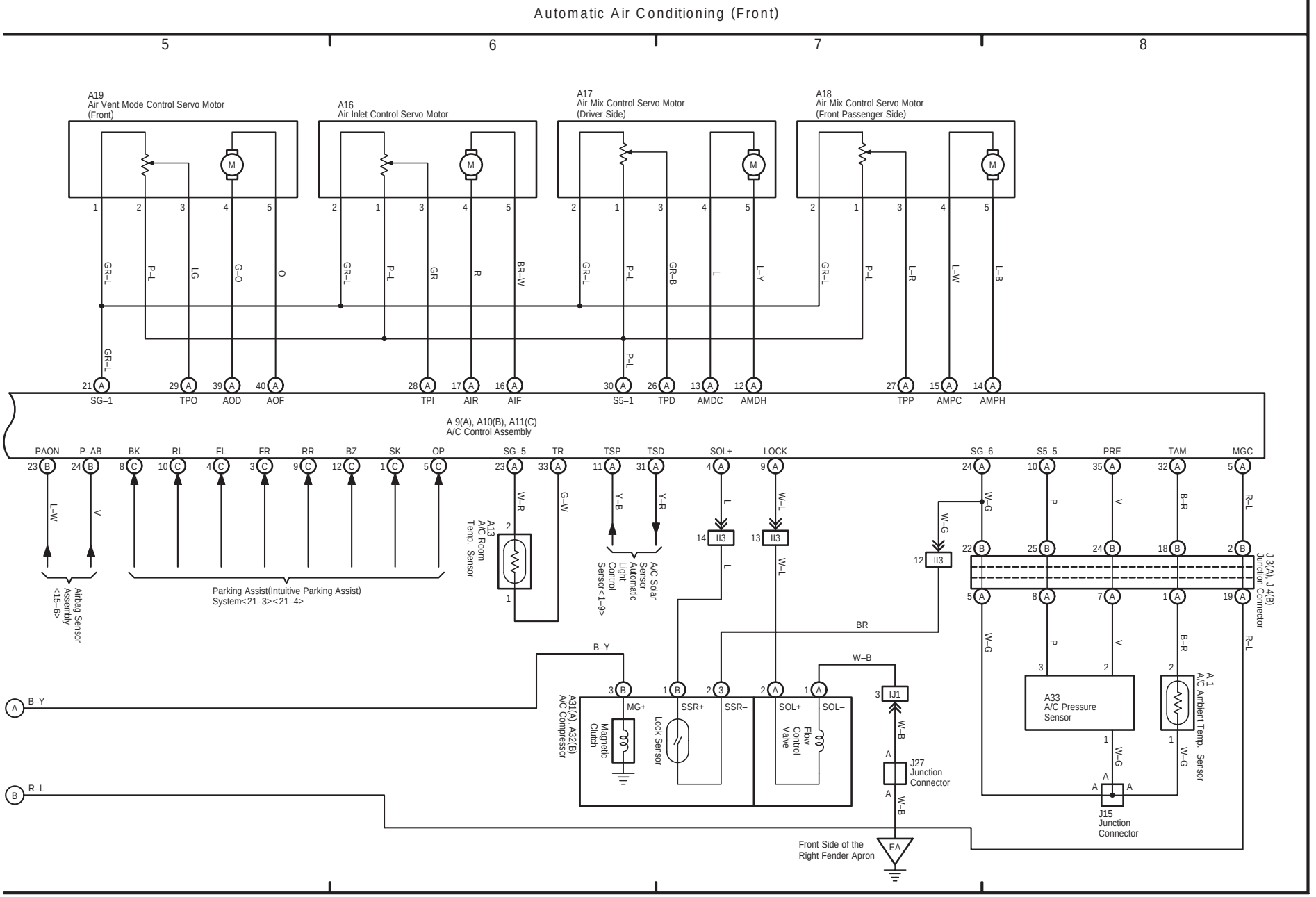
Automatic Air Conditioning (Front)
5
6
7
8
A19
Air Vent Mode Control Servo Motor
(Front)
A16
Air Inlet Control Servo Motor
A17
Air Mix Control Servo Motor
(Driver Side)
A18
Air Mix Control Servo Motor
(Front Passenger Side)
GR–L
P–L
LG
G–O
O
GR
R
BR–W
GR–B
L
L–Y
L–R
L–W
L–B
SG–1
TPO
AOD
AOF
TPI
AIR
AIF
S5–1
TPD
AMDC
AMDH
TPP
AMPC
AMPH
A 9(A), A10(B), A11(C)
A/C Control Assembly
PAON
P–AB
BK
RL
FL
FR
RR
BZ
SK
OP
SG–5
TR
TSP
TSD
SOL+
LOCK
SG–6
S5–5
PRE
TAM
MGC
L–W
V
W–R
G–W
Y–B
Y–R
L
W–L
W–G
P
B–R
R–L
A13
A/C Room
Temp. Sensor
Airbag Sensor
Assembly
<15–6>
Parking Assist(Intuitive Parking Assist)
System<21–3><21–4>
Automatic
Light
Control
Sensor<1–9>
A/C Solar
Sensor
J 3(A), J 4(B)
Junction Connector
BR
B–Y
W–B
A31(A), A32(B)
A/C Compressor
MG+
SSR+
SSR–
SOL+
SOL–
Magnetic
Clutch
Lock Sensor
Flow
Control
Valve
A33
A/C Pressure
Sensor
A1
A/C Ambient Temp. Sensor
J27
Junction
Connector
J15
Junction
Connector
R–L
Front Side of the
Right Fender Apron
EA

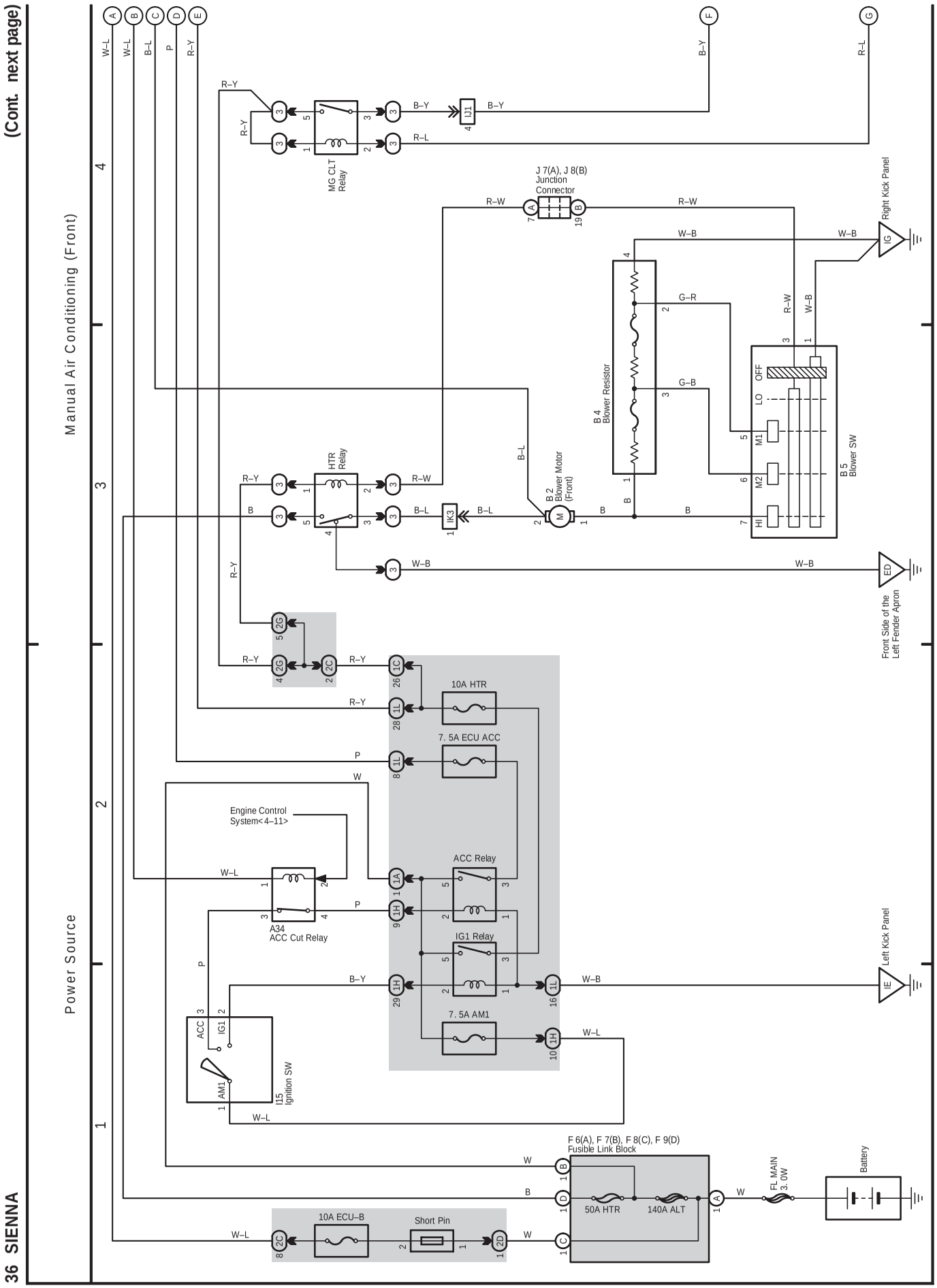
(Cont. next page)
Manual Air Conditioning (Front)
Power Source
MG CLT Relay
HTR Relay
J 7(A), J 8(B) Junction Connector
B 4 Blower Resistor
B 2 Blower Motor (Front)
B 5 Blower SW
OFF
LO
M1
M2
HI
Right Kick Panel
Front Side of the Left Fender Apron
Left Kick Panel
10A HTR
7. 5A ECU ACC
ACC Relay
IG1 Relay
7. 5A AM1
A34 ACC Cut Relay
Engine Control System<4–11>
I15 Ignition SW
ACC
IG1
AM1
F 6(A), F 7(B), F 8(C), F 9(D) Fusible Link Block
50A HTR
140A ALT
10A ECU–B
Short Pin
FL MAIN 3. 0W
Battery
36 SIENNA

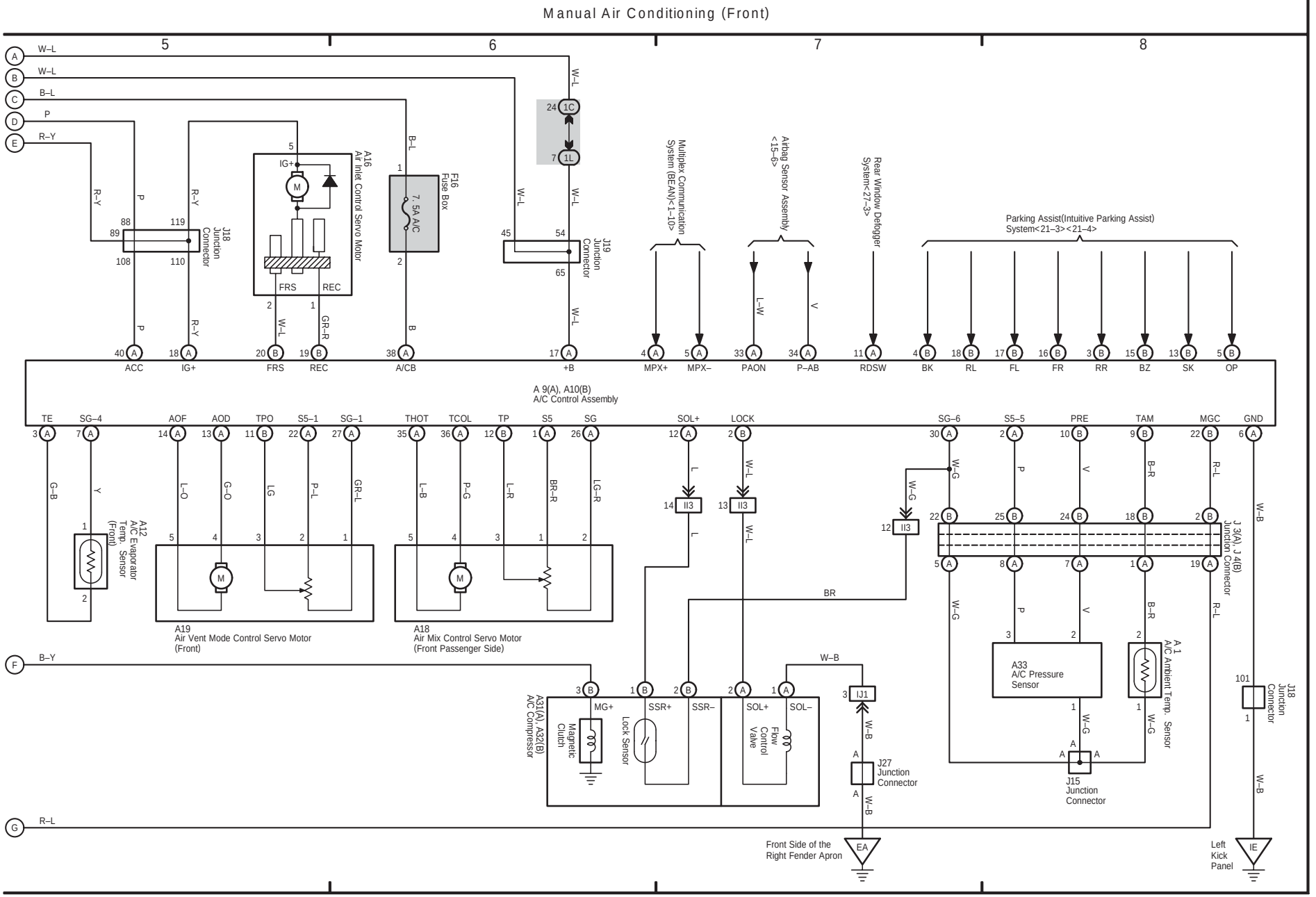
Manual Air Conditioning (Front)
5
6
7
8
W–L
W–L
B–L
P
R–Y
J18 Junction Connector
A16 Air Inlet Control Servo Motor
IG+
FRS
REC
F16 Fuse Box
7. 5A A/C
J19 Junction Connector
Multiplex Communication System (BEAN)<1–10>
Airbag Sensor Assembly <15–6>
Rear Window Defogger System<27–3>
Parking Assist(Intuitive Parking Assist) System<21–3><21–4>
ACC
IG+
FRS
REC
A/CB
+B
MPX+
MPX–
PAON
P–AB
RDSW
BK
RL
FL
FR
RR
BZ
SK
OP
A 9(A), A10(B)
A/C Control Assembly
TE
SG–4
AOF
AOD
TPO
S5–1
SG–1
THOT
TCOL
TP
S5
SG
SOL+
LOCK
SG–6
S5–5
PRE
TAM
MGC
GND
A12 A/C Evaporator Temp. Sensor (Front)
A19 Air Vent Mode Control Servo Motor (Front)
A18 Air Mix Control Servo Motor (Front Passenger Side)
J 3(A), J 4(B) Junction Connector
A33 A/C Pressure Sensor
A 1 A/C Ambient Temp. Sensor
J15 Junction Connector
J18 Junction Connector
A31(A), A32(B) A/C Compressor
MG+
SSR+
SSR–
SOL+
SOL–
Magnetic Clutch
Lock Sensor
Flow Control Valve
J27 Junction Connector
Front Side of the Right Fender Apron
EA
Left Kick Panel
IE
B–Y
R–L
BR
W–B
W–G

37 SIENNA

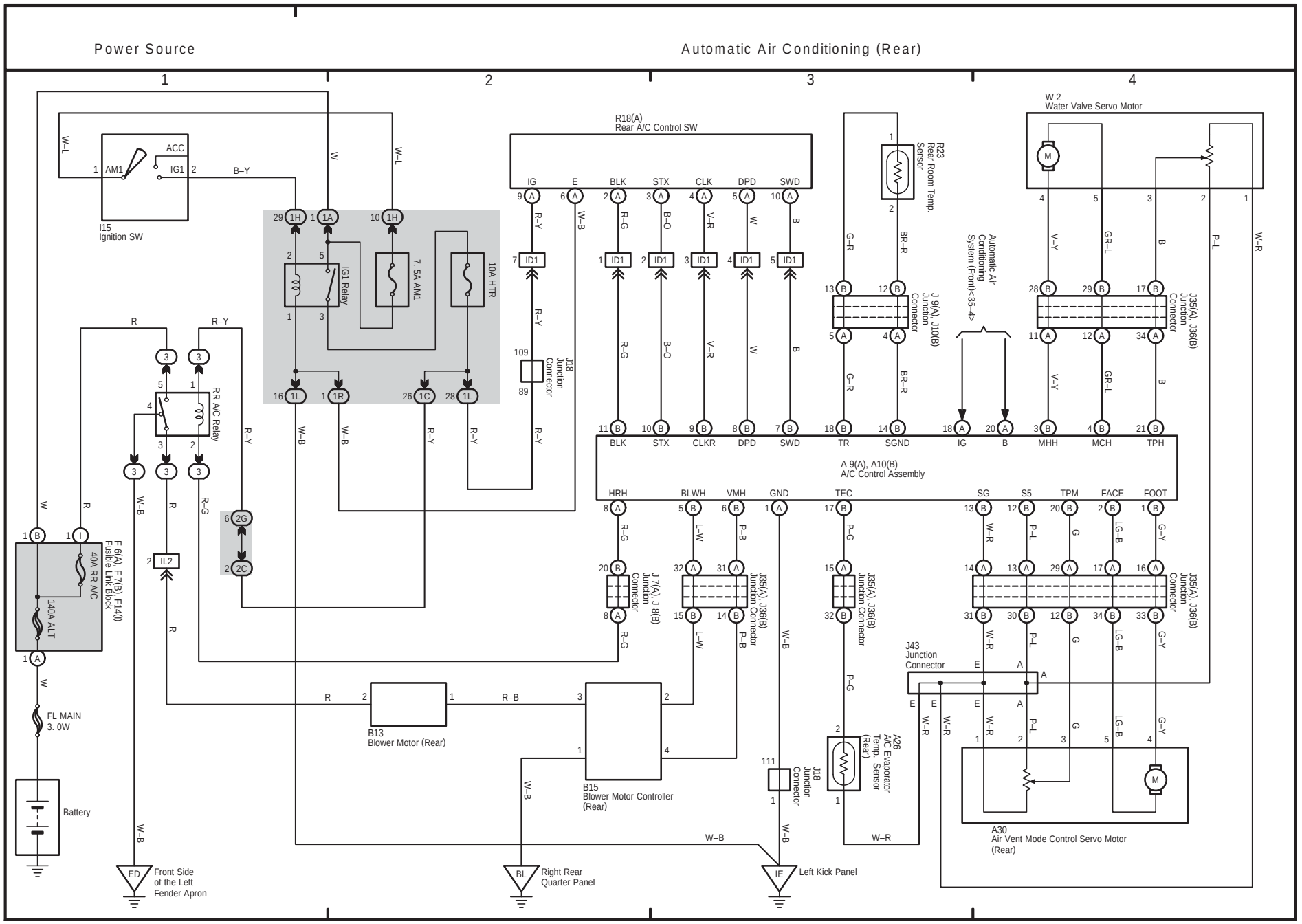
Power Source
Automatic Air Conditioning (Rear)
1
2
3
4
I15
Ignition SW
ACC
AM1
IG1
IG1 Relay
7. 5A AM1
10A HTR
RR A/C Relay
F 6(A), F 7(B), F14(I)
Fusible Link Block
40A RR A/C
140A ALT
FL MAIN
3. 0W
Battery
Front Side
of the Left
Fender Apron
R18(A)
Rear A/C Control SW
IG
E
BLK
STX
CLK
DPD
SWD
J18
Junction
Connector
R23
Rear Room Temp.
Sensor
J 9(A), J10(B)
Junction
Connector
Automatic Air
Conditioning
System (Front)<35–4>
W 2
Water Valve Servo Motor
J35(A), J36(B)
Junction
Connector
A 9(A), A10(B)
A/C Control Assembly
BLK
STX
CLKR
DPD
SWD
TR
SGND
IG
B
MHH
MCH
TPH
HRH
BLWH
VMH
GND
TEC
SG
S5
TPM
FACE
FOOT
J 7(A), J 8(B)
Junction
Connector
J35(A), J36(B)
Junction Connector
J43
Junction
Connector
B13
Blower Motor (Rear)
B15
Blower Motor Controller
(Rear)
A26
A/C Evaporator
Temp. Sensor
(Rear)
A30
Air Vent Mode Control Servo Motor
(Rear)
Right Rear
Quarter Panel
Left Kick Panel

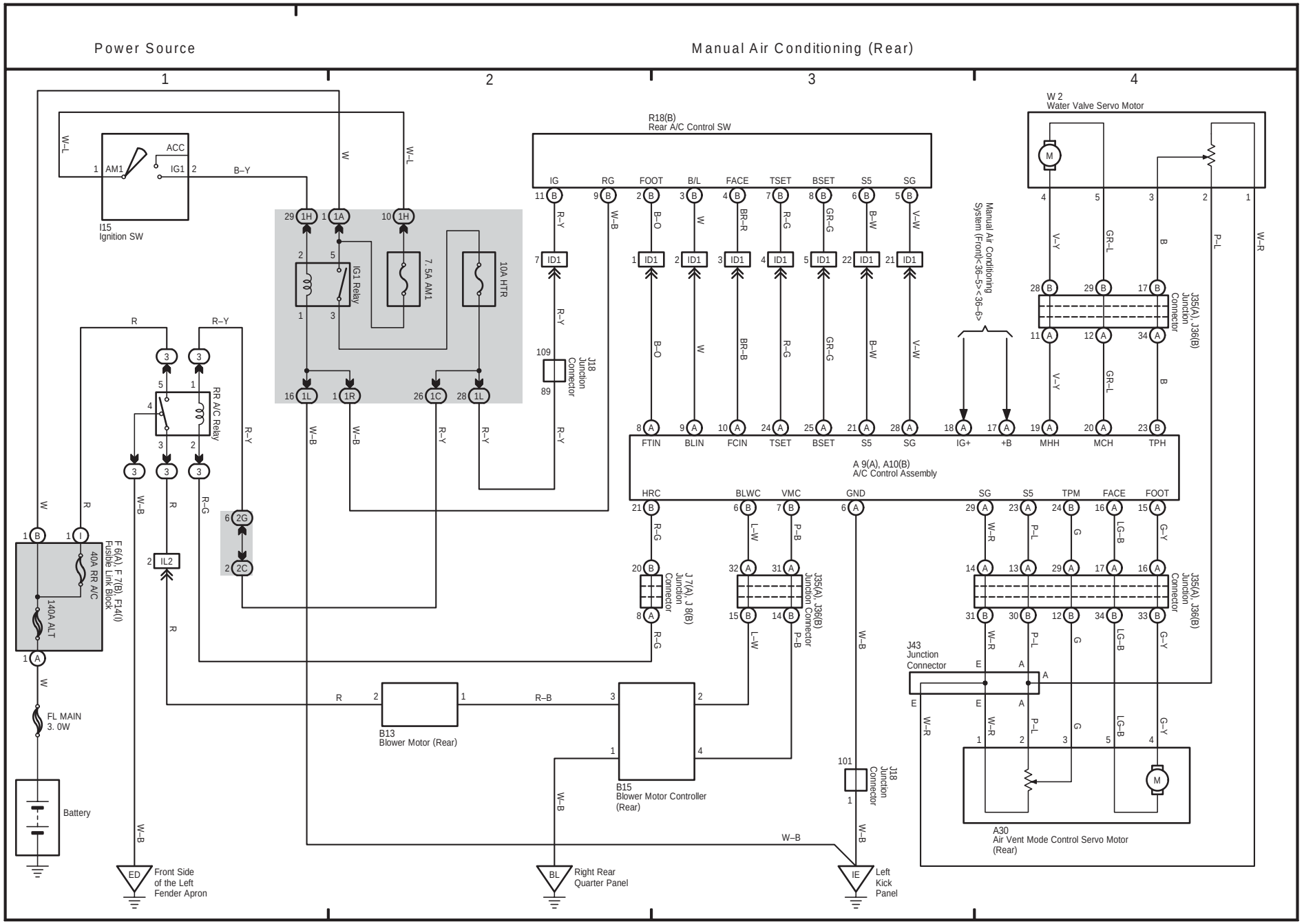
Power Source
Manual Air Conditioning (Rear)
1
2
3
4
I15
Ignition SW
ACC
AM1
IG1
IG1 Relay
7. 5A AM1
10A HTR
RR A/C Relay
F 6(A), F 7(B), F14(I)
Fusible Link Block
40A RR A/C
140A ALT
FL MAIN
3. 0W
Battery
B13
Blower Motor (Rear)
B15
Blower Motor Controller
(Rear)
R18(B)
Rear A/C Control SW
IG
RG
FOOT
B/L
FACE
TSET
BSET
S5
SG
J18
Junction
Connector
A 9(A), A10(B)
A/C Control Assembly
FTIN
BLIN
FCIN
TSET
BSET
S5
SG
IG+
+B
MHH
MCH
TPH
HRC
BLWC
VMC
GND
SG
S5
TPM
FACE
FOOT
J7(A), J 9(B)
Junction
Connector
J35(A), J36(B)
Junction Connector
W 2
Water Valve Servo Motor
Manual Air Conditioning
System (Front)<36–5><36–6>
J43
Junction
Connector
A30
Air Vent Mode Control Servo Motor
(Rear)
ED
Front Side
of the Left
Fender Apron
BL
Right Rear
Quarter Panel
IE
Left
Kick
Panel

39 SIENNA

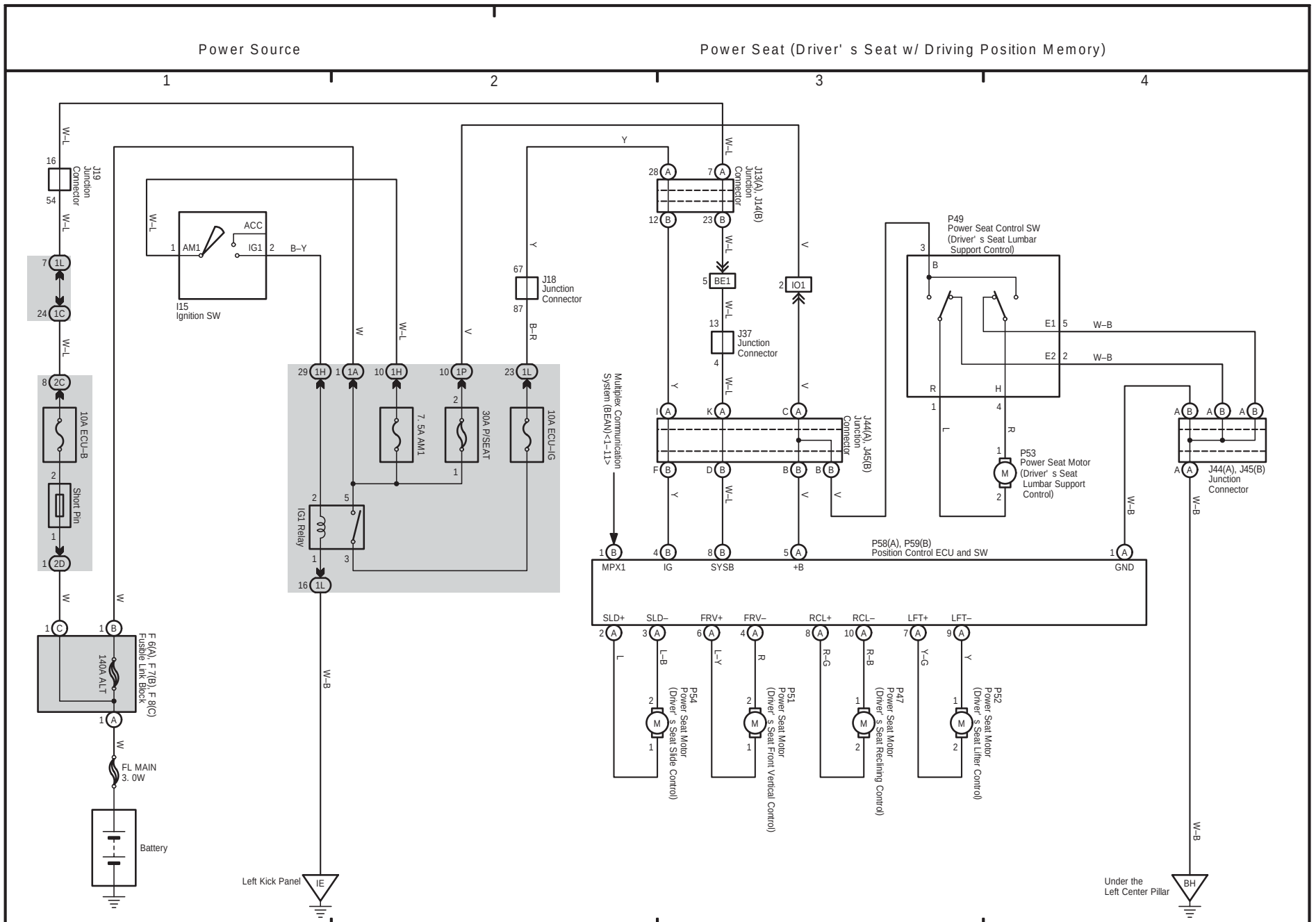
Power Source
Power Seat (Driver' s Seat w/ Driving Position Memory)
1
2
3
4
J19 Junction Connector
I15 Ignition SW
ACC
AM1
IG1
10A ECU–B
Short Pin
F 6(A), F 7(B), F 8(C) Fusible Link Block
140A ALT
FL MAIN 3. 0W
Battery
IG1 Relay
7. 5A AM1
30A P/SEAT
10A ECU–IG
J18 Junction Connector
J13(A), J14(B) Junction Connector
BE1
IO1
J37 Junction Connector
J44(A), J45(B) Junction Connector
Multiplex Communication System (BEAN)<1–11>
P49 Power Seat Control SW (Driver' s Seat Lumbar Support Control)
P53 Power Seat Motor (Driver' s Seat Lumbar Support Control)
J44(A), J45(B) Junction Connector
P58(A), P59(B) Position Control ECU and SW
MPX1
IG
SYSB
+B
GND
SLD+
SLD–
FRV+
FRV–
RCL+
RCL–
LFT+
LFT–
P54 Power Seat Motor (Driver' s Seat Slide Control)
P51 Power Seat Motor (Driver' s Seat Front Vertical Control)
P47 Power Seat Motor (Driver' s Seat Reclining Control)
P52 Power Seat Motor (Driver' s Seat Lifter Control)
Left Kick Panel
IE
Under the Left Center Pillar
BH

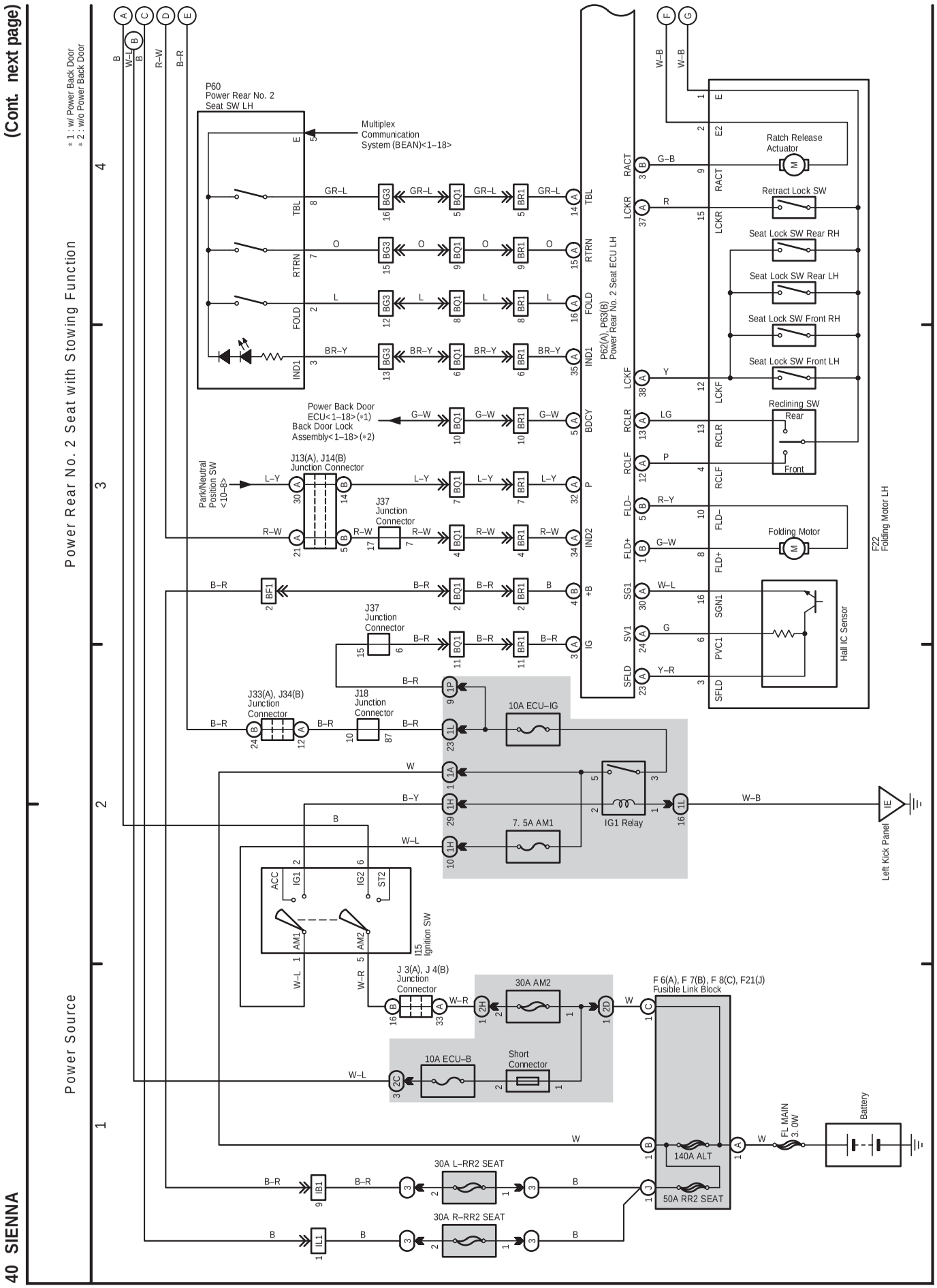
(Cont. next page)
* 1 : w/ Power Back Door
* 2 : w/o Power Back Door
Power Rear No. 2 Seat with Stowing Function
Power Source
P60
Power Rear No. 2
Seat SW LH
Multiplex
Communication
System (BEAN)<1–18>
Power Back Door
ECU<1–18>(*1)
Back Door Lock
Assembly<1–18>(*2)
Park/Neutral
Position SW
<10–8>
J13(A), J14(B)
Junction Connector
J37
Junction
Connector
J33(A), J34(B)
Junction
Connector
J18
Junction
Connector
P62(A), P63(B)
Power Rear No. 2 Seat ECU LH
F22
Folding Motor LH
Ratch Release
Actuator
Retract Lock SW
Seat Lock SW Rear RH
Seat Lock SW Rear LH
Seat Lock SW Front RH
Seat Lock SW Front LH
Reclining SW
Rear
Front
Folding Motor
Hall IC Sensor
10A ECU–IG
7. 5A AM1
IG1 Relay
Left Kick Panel
I15
Ignition SW
ACC
IG1
IG2
ST2
AM1
AM2
J 3(A), J 4(B)
Junction
Connector
30A AM2
10A ECU–B
Short
Connector
F 6(A), F 7(B), F 8(C), F21(J)
Fusible Link Block
140A ALT
50A RR2 SEAT
30A L–RR2 SEAT
30A R–RR2 SEAT
FL MAIN
3. 0W
Battery

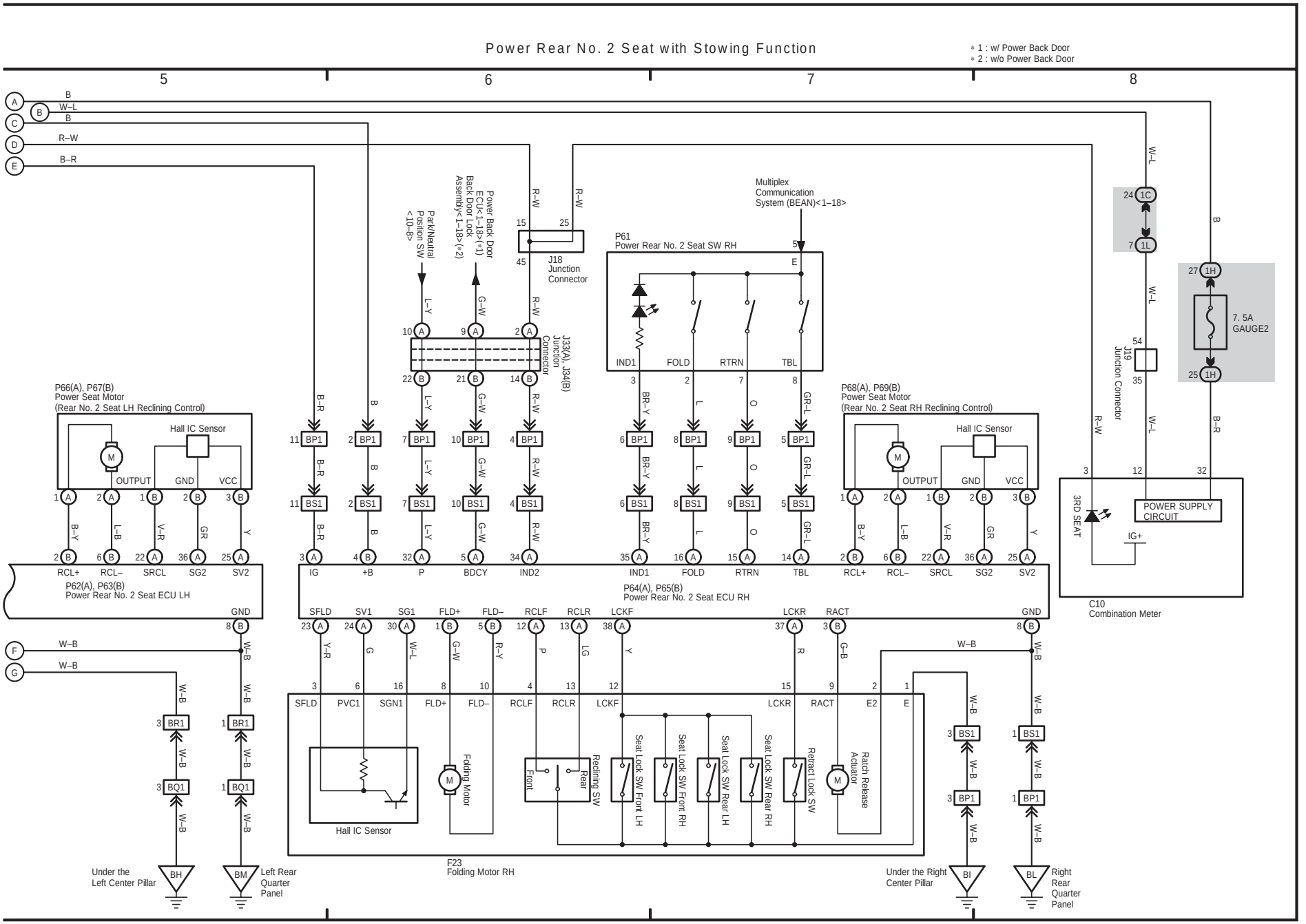
Power Rear No. 2 Seat with Stowing Function
* 1 : w/ Power Back Door
* 2 : w/o Power Back Door
5
6
7
8
Multiplex Communication System (BEAN)<1–18>
P61
Power Rear No. 2 Seat SW RH
IND1
FOLD
RTRN
TBL
J18
Junction Connector
Park/Neutral Position SW <10–8>
Power Back Door ECU<1–18>(*1)
Back Door Lock Assembly<1–18>(*2)
J33(A), J34(B)
Junction Connector
P66(A), P67(B)
Power Seat Motor
(Rear No. 2 Seat LH Reclining Control)
Hall IC Sensor
OUTPUT
GND
VCC
RCL+
RCL–
SRCL
SG2
SV2
P62(A), P63(B)
Power Rear No. 2 Seat ECU LH
P68(A), P69(B)
Power Seat Motor
(Rear No. 2 Seat RH Reclining Control)
P64(A), P65(B)
Power Rear No. 2 Seat ECU RH
IG
+B
P
BDCY
IND2
SFLD
SV1
SG1
FLD+
FLD–
RCLF
RCLR
LCKF
LCKR
RACT
PVC1
SGN1
E2
E
Hall IC Sensor
Folding Motor
Reclining SW
Front
Rear
Seat Lock SW Front LH
Seat Lock SW Front RH
Seat Lock SW Rear LH
Seat Lock SW Rear RH
Retract Lock SW
Ratch Release Actuator
F23
Folding Motor RH
J19
Junction Connector
7. 5A
GAUGE2
3RD SEAT
POWER SUPPLY CIRCUIT
IG+
C10
Combination Meter
Under the Left Center Pillar
Left Rear Quarter Panel
Under the Right Center Pillar
Right Rear Quarter Panel

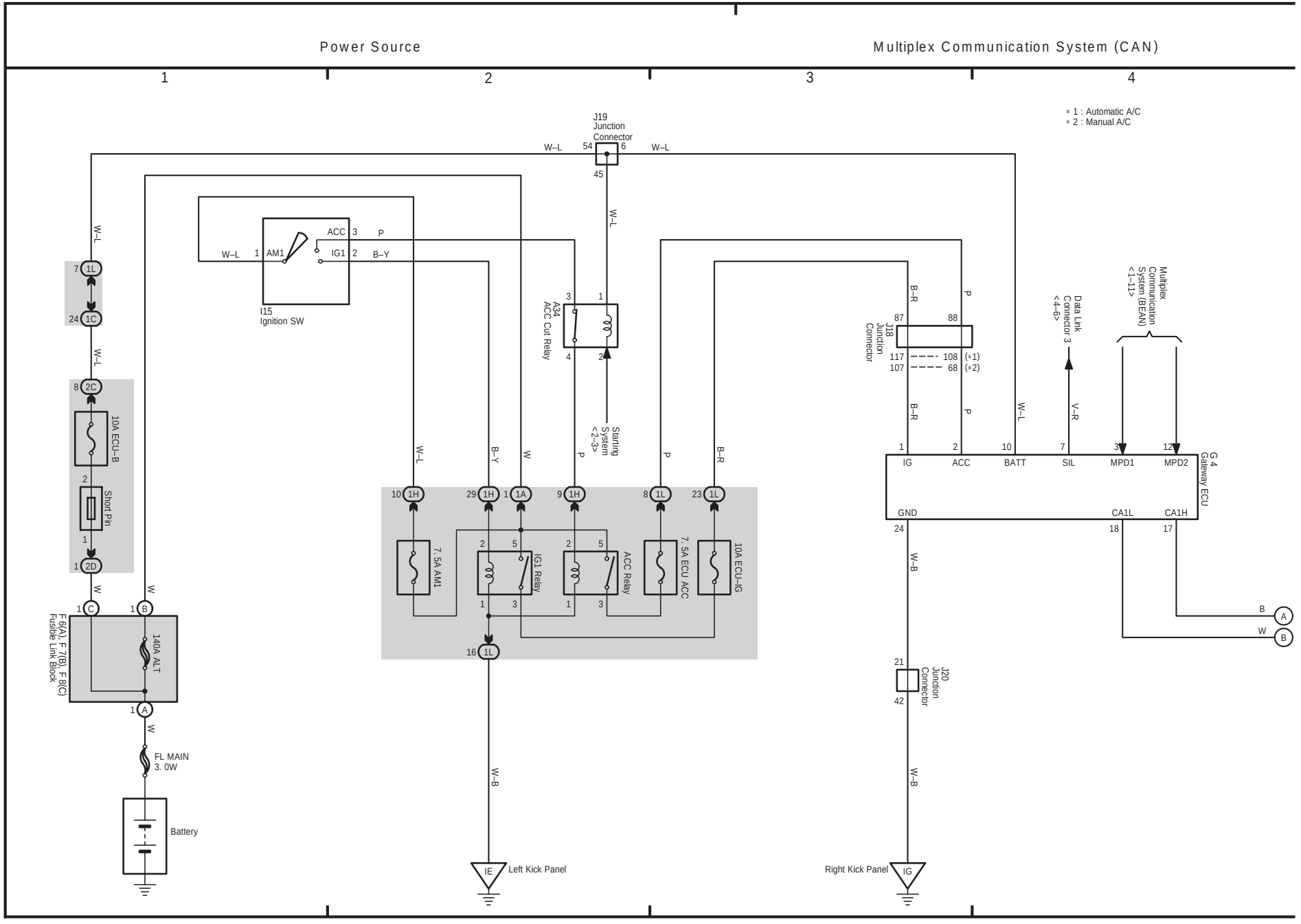
Power Source
Multiplex Communication System (CAN)
1
2
3
4
* 1 : Automatic A/C
* 2 : Manual A/C
J19 Junction Connector
W–L
54
6
45
I15 Ignition SW
ACC
IG1
AM1
B–Y
A34 ACC Cut Relay
Starting System <2–3>
J18 Junction Connector
87
88
117
107
108
68
(*1)
(*2)
B–R
P
V–R
Data Link Connector 3 <4–6>
Multiplex Communication System (BEAN) <1–11>
G 4 Gateway ECU
IG
ACC
BATT
SIL
MPD1
MPD2
GND
CA1L
CA1H
10A ECU–B
Short Pin
7. 5A AM1
IG1 Relay
ACC Relay
7. 5A ECU ACC
10A ECU–IG
F 6(A), F 7(B), F 8(C) Fusible Link Block
140A ALT
FL MAIN 3. 0W
Battery
J20 Junction Connector
IE
Left Kick Panel
Right Kick Panel
IG
B
W

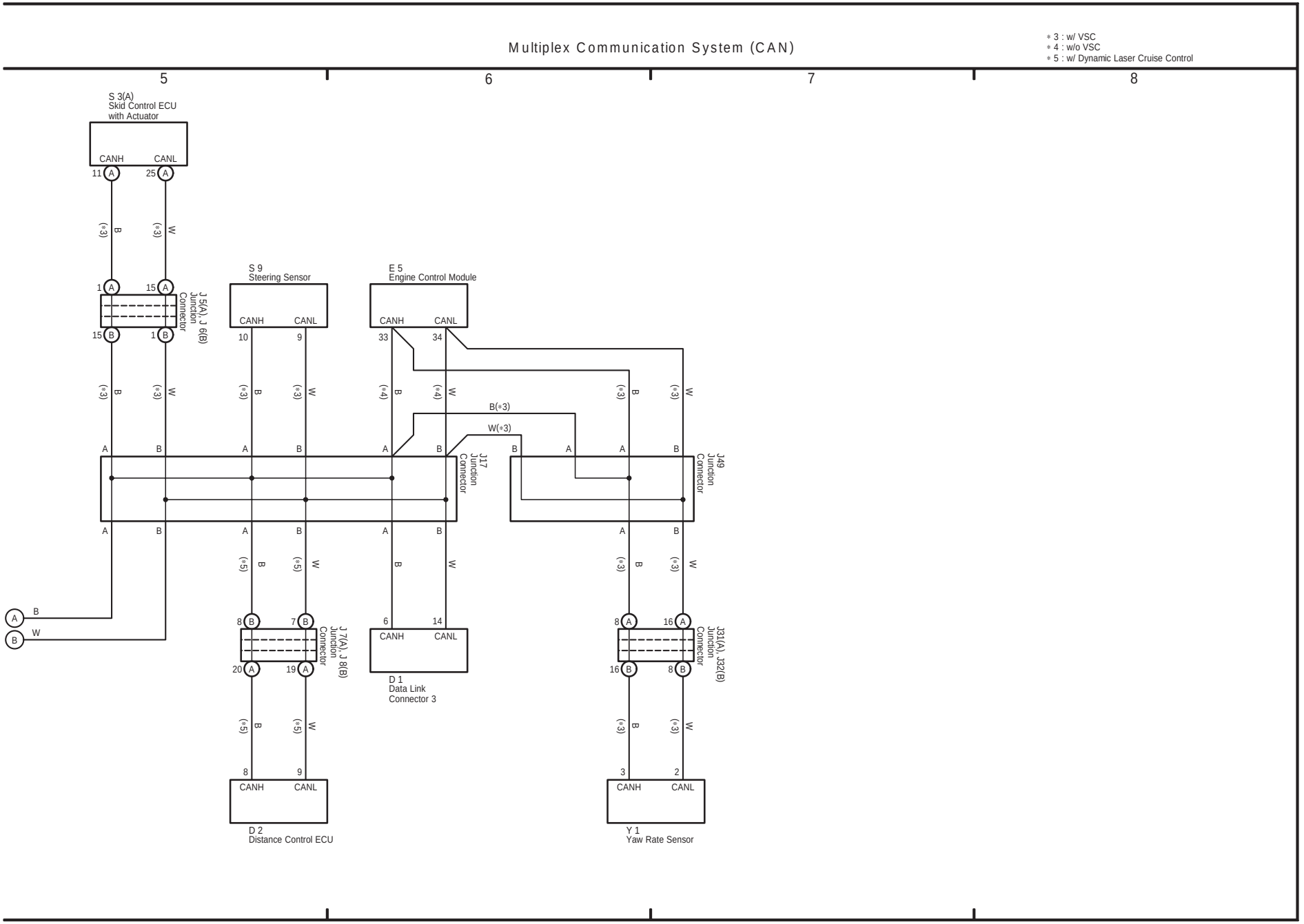
Multiplex Communication System (CAN)
* 3 : w/ VSC
* 4 : w/o VSC
* 5 : w/ Dynamic Laser Cruise Control
5
6
7
8
S 3(A)
Skid Control ECU
with Actuator
CANH
CANL
11 A
25 A
(*3) B
(*3) W
1 A
15 A
J 5(A), J 6(B)
Junction
Connector
15 B
1 B
S 9
Steering Sensor
10
9
E 5
Engine Control Module
33
34
(*4) B
(*4) W
B(*3)
W(*3)
J17
Junction
Connector
J49
Junction
Connector
(*5) B
(*5) W
8 B
7 B
J7(A), J 8(B)
Junction
Connector
20 A
19 A
6
14
D 1
Data Link
Connector 3
8 A
16 A
J31(A), J32(B)
Junction
Connector
16 B
8 B
D 2
Distance Control ECU
3
2
Y 1
Yaw Rate Sensor

42 SIENNA

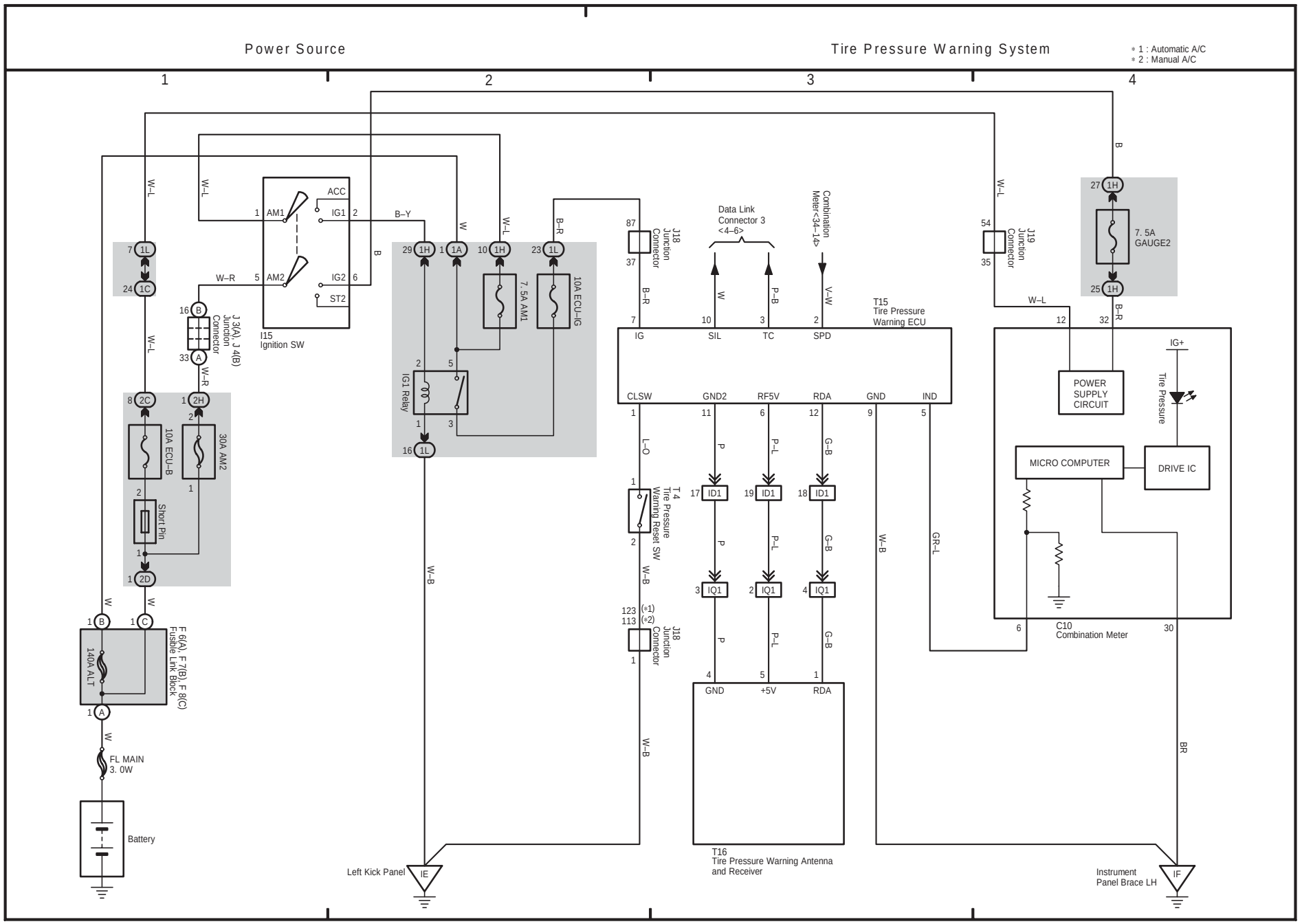
Power Source
Tire Pressure Warning System
* 1 : Automatic A/C
* 2 : Manual A/C
1
2
3
4
ACC
IG1
IG2
ST2
AM1
AM2
I15
Ignition SW
J 3(A), J 4(B)
Junction
Connector
10A ECU–B
30A AM2
Short Pin
F 6(A), F 7(B), F 8(C)
Fusible Link Block
140A ALT
FL MAIN
3. 0W
Battery
7. 5A AM1
10A ECU–IG
IG1 Relay
J18
Junction
Connector
Data Link
Connector 3
<4–6>
Combination
Meter<34–14>
T15
Tire Pressure
Warning ECU
IG
SIL
TC
SPD
CLSW
GND2
RF5V
RDA
GND
IND
T4
Tire Pressure
Warning Reset SW
ID1
IQ1
T16
Tire Pressure Warning Antenna
and Receiver
GND
+5V
RDA
J19
Junction
Connector
7. 5A
GAUGE2
POWER
SUPPLY
CIRCUIT
IG+
Tire Pressure
MICRO COMPUTER
DRIVE IC
C10
Combination Meter
Left Kick Panel
IE
Instrument
Panel Brace LH
IF

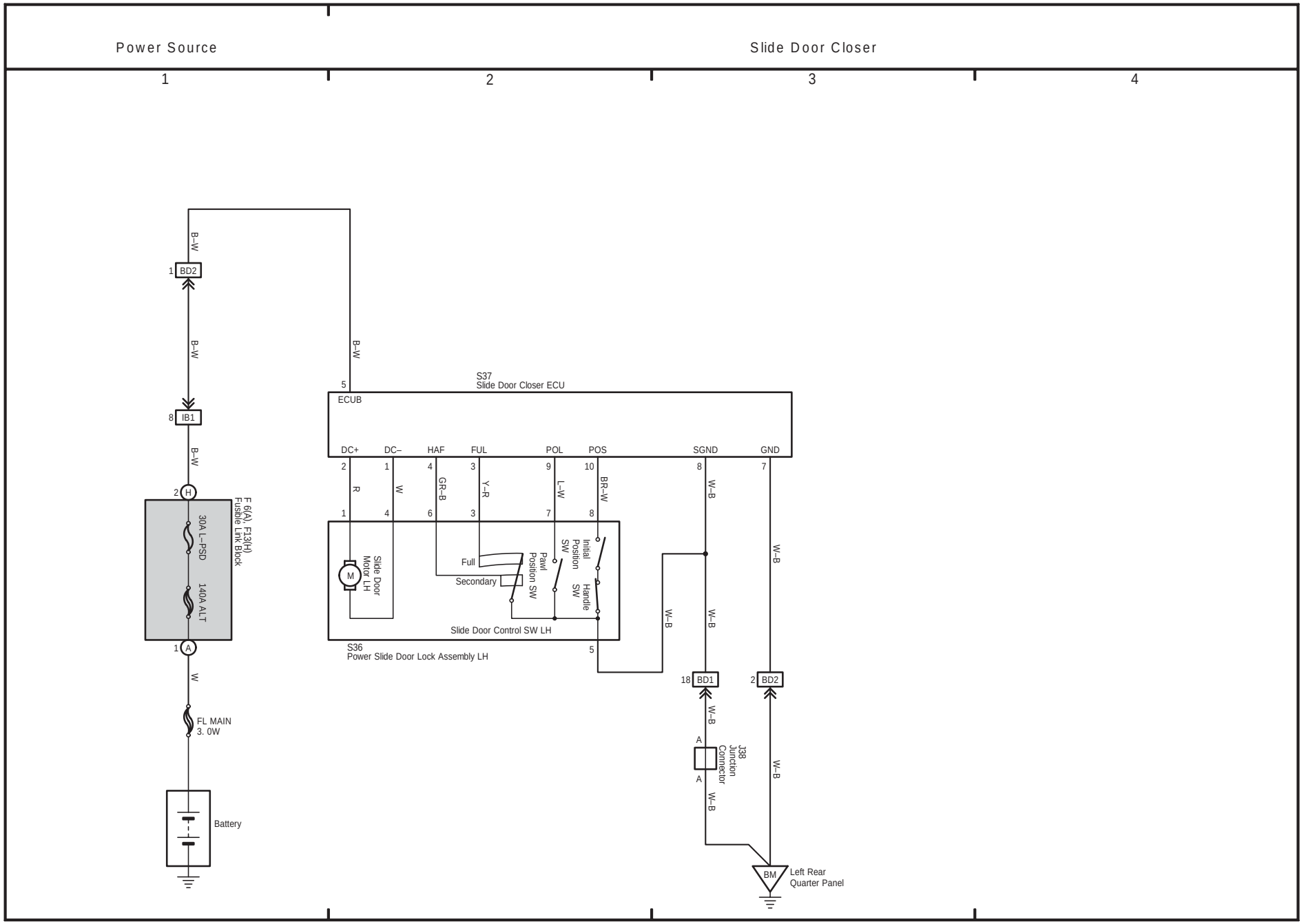
Power Source
Slide Door Closer
1
2
3
4
B–W
1 BD2
B–W
8 IB1
B–W
2 H
F 6(A) F13(H)
Fusible Link Block
30A L–PSD
140A ALT
1 A
W
FL MAIN
3. 0W
Battery
B–W
5
S37
Slide Door Closer ECU
ECUB
DC+
DC–
HAF
FUL
POL
POS
SGND
GND
2
1
4
3
9
10
8
7
R
W
GR–B
Y–R
L–W
BR–W
W–B
1
4
6
3
7
8
Slide Door Motor LH
M
Full
Secondary
Pawl Position SW
Initial Position SW
Handle SW
Slide Door Control SW LH
S36
Power Slide Door Lock Assembly LH
5
W–B
W–B
W–B
18 BD1
2 BD2
W–B
A
J38
Junction Connector
A
W–B
W–B
BM
Left Rear Quarter Panel

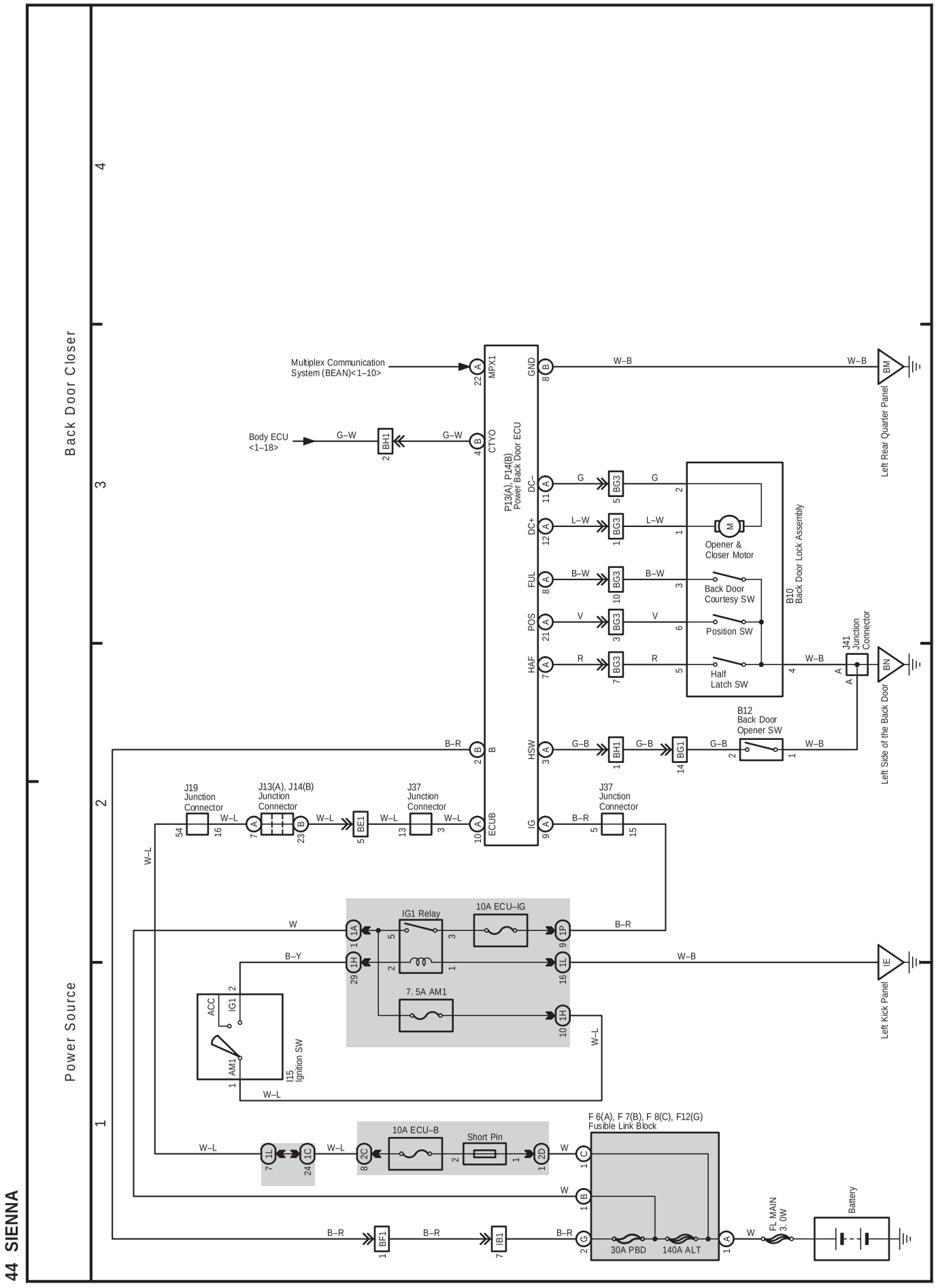
Back Door Closer
Power Source
1
2
3
4
Multiplex Communication System (BEAN)<1–10>
Body ECU <1–18>
P13(A), P14(B) Power Back Door ECU
MPX1
CTYO
ECUB
GND
DC–
DC+
FUL
POS
HAF
HSW
IG
Opener & Closer Motor
Back Door Courtesy SW
Position SW
Half Latch SW
B10 Back Door Lock Assembly
B12 Back Door Opener SW
J41 Junction Connector
Left Rear Quarter Panel
Left Side of the Back Door
Left Kick Panel
J19 Junction Connector
J13(A), J14(B) Junction Connector
J37 Junction Connector
IG1 Relay
10A ECU–IG
7. 5A AM1
10A ECU–B
Short Pin
F 6(A), F 7(B), F 8(C), F12(G) Fusible Link Block
30A PBD
140A ALT
FL MAIN 3. 0W
Battery
I15 Ignition SW
ACC
IG1
AM1

44 SIENNA