DTC	P0100	Mass or Volume Air Flow Circuit

DTC	P0102	Mass or Volume Air Flow Circuit Low Input

DTC	P0103	Mass or Volume Air Flow Circuit High Input

DESCRIPTION

The Mass Air Flow (MAF) meter is a sensor that measures the amount of air flowing through the throttle valve. The ECM uses this information to determine the fuel injection time and to provide appropriate air-fuel ratio. Inside the MAF meter, there is a heated platinum wire which is exposed to the flow of intake air. By applying a specific electrical current to the wire, the ECM heats it to a specific temperature. The flow of incoming air cools both the wire and an internal thermistor, changing their resistance. To maintain a constant current value, the ECM varies the voltage applied to these components in the MAF meter. The voltage level is proportional to the air flow through the sensor, and the ECM uses it to calculate the intake air volume.

ES

The circuit is constructed so that the platinum hot wire and the temperature sensor provide a bridge circuit, and the power transistor is controlled so that the potentials of A and B remain equal to maintain the predetermined temperature.

HINT:

When any of these DTCs are set, the ECM enters fail-safe mode. During fail-safe mode, the ignition timing is calculated by the ECM, according to the engine RPM and throttle valve position. Fail-safe mode continues until a pass condition is detected.

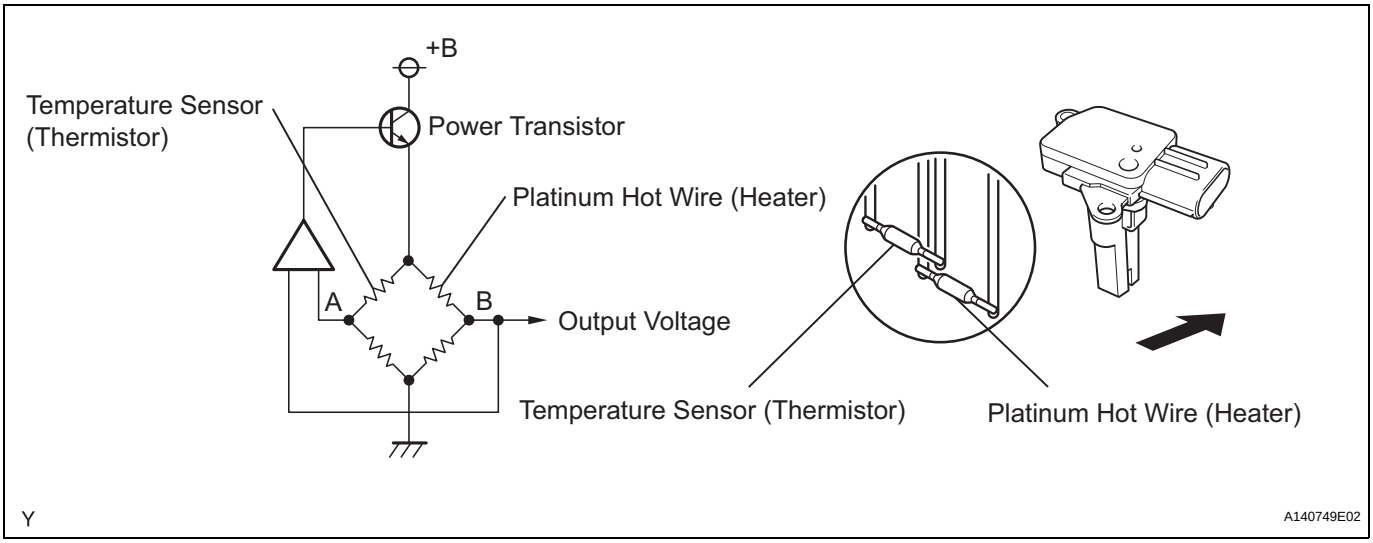

DTC No.	DTC Detection Condition	Trouble Area
P0100	Open or short in Mass Air Flow (MAF) meter circuit for 3 seconds	• Open or short in MAF meter circuit • MAF meter • ECM
P0102	Open in Mass Air Flow (MAF) meter circuit for 3 seconds	• Open in MAF meter circuit • Short in ground circuit • MAF meter • ECM
P0103	Short in Mass Air Flow (MAF) meter circuit for 3 seconds	• Short in MAF meter circuit (+B circuit) • MAF meter • ECM

HINT:

When any of these DTCs are set, check the air-flow rate by selecting the following menu items on an intelligent tester: DIAGNOSIS / ENHANCED OBD II / DATA LIST / PRIMARY / MAF.

Mass Air Flow Rate (gm/s)	Malfunctions
Approximately 0.0	• Open in Mass Air Flow (MAF) meter power source circuit • Open or short in VG circuit
271.0 or more	Open in E2G circuit

MONITOR DESCRIPTION

If there is a defect in the MAF meter or an open or short circuit, the voltage level deviates from the normal operating range. The ECM interprets this deviation as a malfunction in the MAF meter and sets a DTC.

Example:

When the sensor voltage output remains less than 0.2 V, or more than 4.9 V, for more than 3 seconds, the ECM sets a DTC.

If the malfunction is not repaired successfully, a DTC is set 3 seconds after the engine is next started.

ES

MONITOR STRATEGY

Related DTCs	P0100: Mass air flow meter range check (Fluctuating) P0102: Mass air flow meter range check (Low voltage) P0103: Mass air flow meter range check (High voltage)
Required Sensors / Components (Main)	MAF meter
Required Sensors / Components (Related)	Crankshaft position sensor
Frequency of Operation	Continuous
Duration	3 seconds
MIL Operation	Immediate: Engine RPM less than 4000 rpm 2 driving cycles: Engine RPM 4000 rpm or more
Sequence of Operation	None

TYPICAL ENABLING CONDITIONS

The monitor will run whenever these DTCs are not present	None

TYPICAL MALFUNCTION THRESHOLDS

P0100:

Mass air flow meter voltage	Less than 0.2 V, or more than 4.9 V

P0102:

Mass air flow meter voltage	Less than 0.2 V

P0103:

Mass air flow meter voltage	More than 4.9 V

COMPONENT OPERATING RANGE

Mass air flow meter voltage	Between 0.4 V and 2.2 V

WIRING DIAGRAM

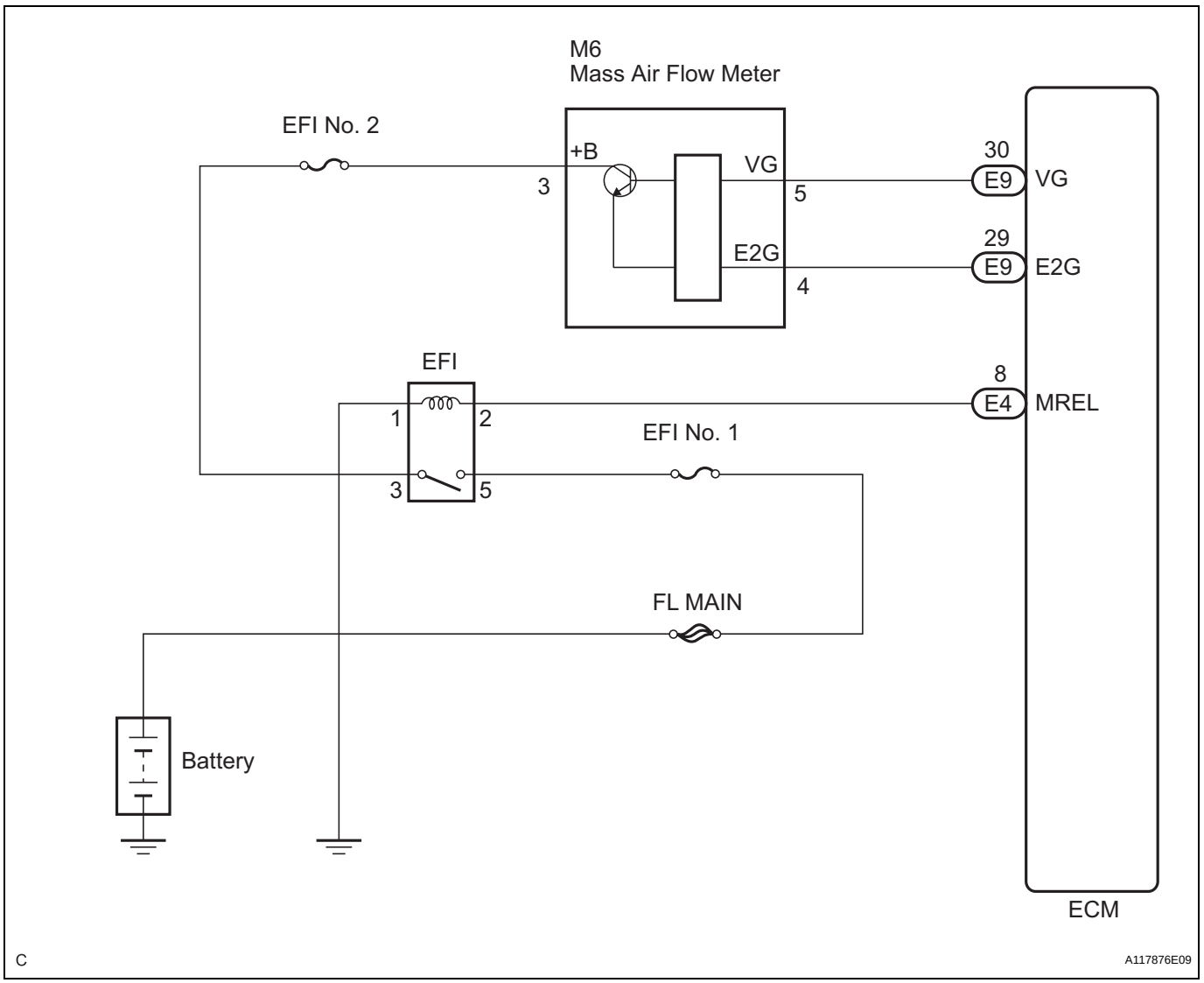

ES

INSPECTION PROCEDURE

HINT:
Read freeze frame data using the intelligent tester. The ECM records vehicle and driving condition information as freeze frame data the moment a DTC is stored. When troubleshooting, freeze frame data can be helpful in determining whether the vehicle was running or stopped, whether the engine was warmed up or not, whether the air-fuel ratio was lean or rich, as well as other data recorded at the time of a malfunction.

1	**READ VALUE OF INTELLIGENT TESTER (MASS AIR FLOW RATE)**

(a) Connect the intelligent tester to the DLC3.
(b) Start the engine.
(c) Turn the tester on.
(d) Select the following menu items: DIAGNOSIS / ENHANCED OBD II / DATA LIST / PRIMARY / MAF.
(e) Read the values displayed on the tester.

Result

Mass Air Flow Rate (gm/s)	Proceed to
0.0	A
271.0 or more	B
Between 1.0 and 270.0 (*1)	C

*1: The value must be changed when the throttle valve is open or closed.

B → Go to step 6

C → CHECK FOR INTERMITTENT PROBLEMS

A

ES

2 INSPECT MASS AIR FLOW METER (POWER SOURCE VOLTAGE)

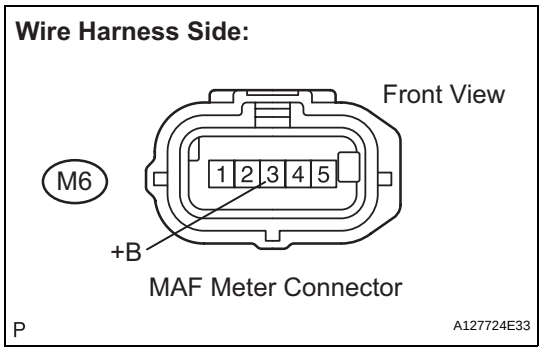

(a) Disconnect the M6 Mass Air Flow (MAF) meter connector.
(b) Turn the ignition switch to the ON position.
(c) Measure the voltage according to the value(s) in the table below.

Standard voltage

Tester Connection	Specified Condition
+B (M6-3) - Body ground	9 to 14 V

(d) Reconnect the MAF meter connector.

NG → Go to step 5

OK

3 INSPECT ECM (VG VOLTAGE)

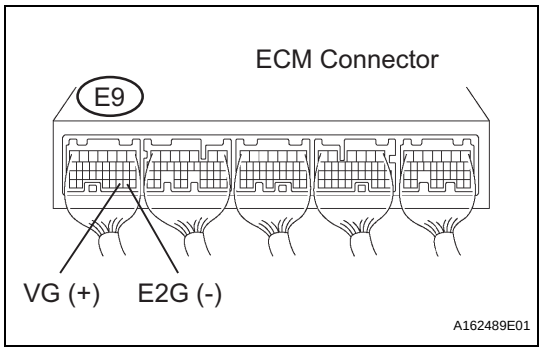

(a) Start the engine.
(b) Measure the voltage between the terminals of the E9 ECM connector.
HINT:
The transmission gear selector lever should be in the P or N position and the A/C switch should be turned off.

Standard voltage

Tester Connection	Condition	Specified Condition
VG (E9-30) - E2G (E9-29)	Engine idling	0.5 to 3.0 V

OK → REPLACE ECM (See page ES-498)

NG

4	CHECK HARNESS AND CONNECTOR (MASS AIR FLOW METER - ECM)

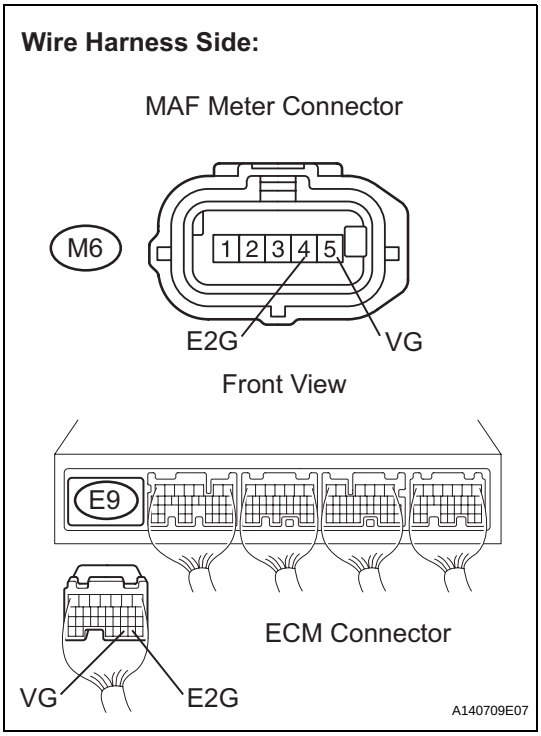

(a) Disconnect the M6 MAF meter connector.
(b) Disconnect the E9 ECM connector.
(c) Measure the resistance according to the value(s) in the table below.

Standard resistance :

Check for open

Tester Connection	Specified Condition
VG (M6-5) - VG (E9-30)	Below 1 Ω
E2G (M6-4) - E2G (E9-29)	Below 1 Ω

Check for short

Tester Connection	Specified Condition
VG (M6-5) or VG (E9-30) - Body ground	10 kΩ or higher
E2G (M6-4) or E2G (E9-29) - Body ground	10 kΩ or higher

(d) Reconnect the MAF meter connector.
(e) Reconnect the ECM connector.

NG → **REPAIR OR REPLACE HARNESS OR CONNECTOR (MASS AIR FLOW METER - ECM)**

OK

REPLACE MASS AIR FLOW METER (See page ES-504)

5	INSPECT FUSE (EFI NO. 2 FUSE)

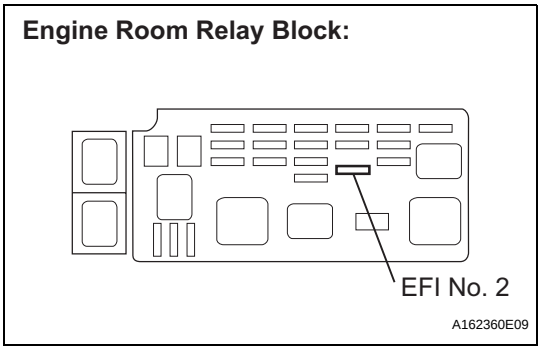

(a) Remove the EFI No. 2 fuse from the engine room relay block.
(b) Measure the resistance according to the value(s) in the table below.

Standard resistance:

Below 1 Ω

(c) Reinstall the EFI No. 2 fuse.

NG → **REPLACE EFI NO. 2 FUSE**

OK

REPAIR OR REPLACE HARNESS OR CONNECTOR (MASS AIR FLOW METER - EFI RELAY)

6 INSPECT ECM (SENSOR GROUND)

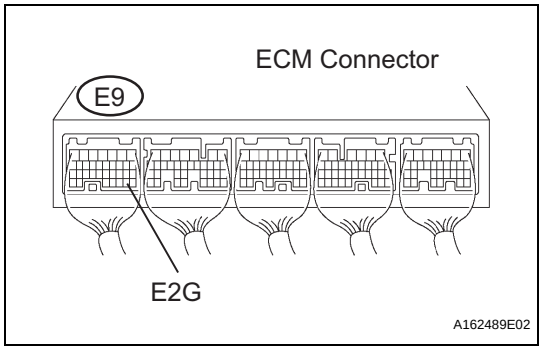

(a) Measure the resistance according to the value(s) in the table below.

Standard resistance

Tester Connection	Specified Condition
E2G (E9-29) - Body ground	Below 1 Ω

NG → **REPLACE ECM (See page ES-498)**

OK

7 CHECK HARNESS AND CONNECTOR (MASS AIR FLOW METER - ECM)

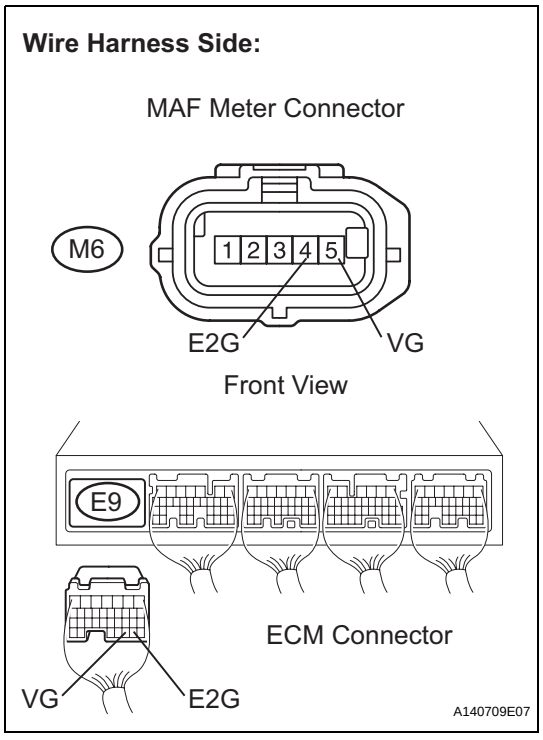

(a) Disconnect the M6 MAF meter connector.
(b) Disconnect the E9 ECM connector.
(c) Measure the resistance according to the value(s) in the table below.

Standard resistance:

Check for open

Tester Connection	Specified Condition
VG (M6-5) - VG (E9-30)	Below 1 Ω
E2G (M6-4) - E2G (E9-29)	Below 1 Ω

Check for short

Tester Connection	Specified Condition
VG (M6-5) or VG (E9-30) - Body ground	10 kΩ or higher
E2G (M6-4) or E2G (E9-29) - Body ground	10 kΩ or higher

(d) Reconnect the MAF meter connector.
(e) Reconnect the ECM connector.

NG → **REPAIR OR REPLACE HARNESS OR CONNECTOR (MASS AIR FLOW METER - ECM)**

OK

REPLACE MASS AIR FLOW METER (See page ES-504)