DTC	P0115	Engine Coolant Temperature Circuit

DTC	P0117	Engine Coolant Temperature Circuit Low Input

DTC	P0118	Engine Coolant Temperature Circuit High Input

DESCRIPTION

A thermistor is built into the Engine Coolant Temperature (ECT) sensor, of which the resistance value varies according to the ECT.

The structure of the sensor and its connection to the ECM are the same as those of the Intake Air Temperature (IAT) sensor.

HINT:

When any of DTCs P0115, P0117 and P0118 are set, the ECM enters fail-safe mode. During fail-safe mode, the ECT is estimated to be 80°C (176°F) by the ECM. Fail-safe mode continues until a pass condition is detected.

DTC No.	Proceed to	DTC Detection Condition	Trouble Area
P0115	Step 1	Open or short in Engine Coolant Temperature (ECT) sensor circuit for 0.5 seconds (1 trip detection logic)	• Open or short in ECT sensor circuit • ECT sensor • ECM
P0117	Step 4	Short in Engine Coolant Temperature (ECT) sensor circuit for 0.5 seconds (1 trip detection logic)	• Short in ECT sensor circuit • ECT sensor • ECM
P0118	Step 2	Open in Engine Coolant Temperature (ECT) sensor circuit for 0.5 seconds (1 trip detection logic)	• Open in ECT sensor circuit • ECT sensor • ECM

HINT:

When any of these DTCs are set, check the ECT by selecting the following menu items on the intelligent tester: DIAGNOSIS / ENHANCED OBD II / DATA LIST / PRIMARY / COOLANT TEMP.

Temperature Displayed	Malfunctions
-40°C (-40°F)	Open circuit
140°C (284°F) or higher	Short circuit

MONITOR DESCRIPTION

The Engine Coolant Temperature (ECT) sensor is used to monitor the ECT. The ECT sensor has a thermistor with a resistance that varies according to the temperature of the engine coolant. When the coolant temperature becomes low, the resistance in the thermistor increases. When the temperature becomes high, the resistance drops.

These variations in resistance are reflected in the voltage output from the sensor. The ECM monitors the sensor voltage and uses this value to calculate the ECT. When the sensor output voltage deviates from the normal operating range, the ECM interprets this as a fault in the ECT sensor and sets a DTC.

Example:

If the sensor voltage output is -40°C (-40°F) for 0.5 seconds or more, the ECM determines that there is an open in the ECT sensor circuit, and sets DTC P0118. Conversely, if the voltage output is more than 140°C (284°F) for 0.5 seconds or more, the ECM determines that there is a short in the sensor circuit, and sets DTC P0117.

If the malfunction is not repaired successfully, a DTC is set 0.5 seconds after the engine is next started.

MONITOR STRATEGY

Related DTCs	P0115: Engine coolant temperature sensor open/short (Fluctuating) P0117: Engine coolant temperature sensor short (Low electrical voltage) P0118: Engine coolant temperature sensor open (High electrical voltage)

Required Sensors / Components (Main)	Engine coolant temperature sensor
Required Sensors / Components (Related)	-
Frequency of Operation	Continuous
Duration	0.5 seconds
MIL Operation	Immediate
Sequence of Operation	None

TYPICAL ENABLING CONDITIONS

The monitor will run whenever these DTCs are not present	None

ES

TYPICAL MALFUNCTION THRESHOLDS

P0115:

Engine coolant temperature sensor voltage	Less than 0.14 V or more than 4.91 V

P0117:

Engine coolant temperature sensor voltage	Less than 0.14 V [More than 140°C (284°F)]

P0118:

Engine coolant temperature sensor voltage	More than 4.91 V [Less than -40°C (-40°F)]

COMPONENT OPERATING RANGE

Engine coolant temperature sensor voltage	0.14 V to 4.91 V [-40 to 140°C (-40 to 284°F)]

WIRING DIAGRAM

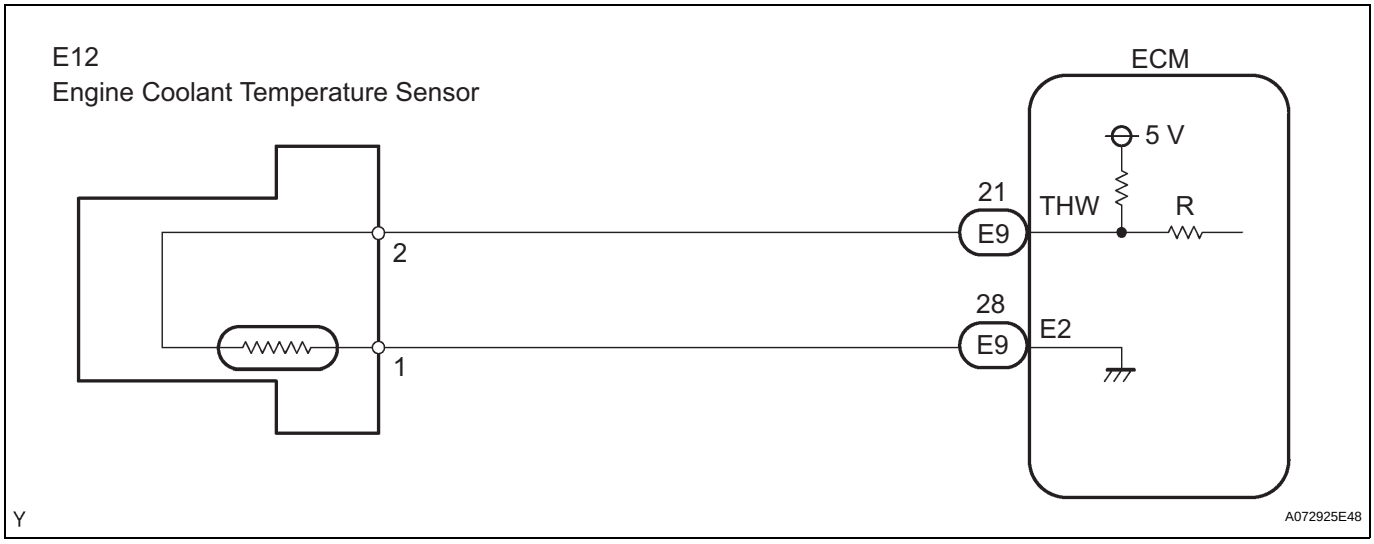

INSPECTION PROCEDURE

HINT:

- If other DTCs relating to different systems that have terminal E2 as the ground terminal are output simultaneously, terminal E2 may have an open circuit.

- Read freeze frame data using the intelligent tester. The ECM records vehicle and driving condition information as freeze frame data the moment a DTC is stored. When troubleshooting, freeze frame data can be helpful in determining whether the vehicle was running or stopped, whether the engine was warmed up or not, whether the air-fuel ratio was lean or rich, as well as other data recorded at the time of a malfunction.

1	READ VALUE OF INTELLIGENT TESTER (ENGINE COOLANT TEMPERATURE)

(a) Connect the intelligent tester to the DLC3.
(b) Turn the ignition switch to the ON position.
(c) Turn the tester on.
(d) Select the following menu items: DIAGNOSIS / ENHANCED OBD II / DATA LIST / PRIMARY / COOLANT TEMP.
(e) Read the value displayed on the tester.
Standard:
Between 80°C and 97°C (176°F and 207°F) with warm engine.

ES

Result

Temperature Displayed	Proceed to
-40°C (-40°F)	A
140°C (284°F) or higher	B
Between 80°C and 97°C (176°F and 207°F)	C

HINT:
- If there is an open circuit, the intelligent tester indicates -40°C (-40°F).
- If there is a short circuit, the intelligent tester indicates 140°C (284°F) or higher.

B → **Go to step 4**

C → **CHECK FOR INTERMITTENT PROBLEMS**

A

2	READ VALUE OF INTELLIGENT TESTER (CHECK FOR OPEN IN WIRE HARNESS)

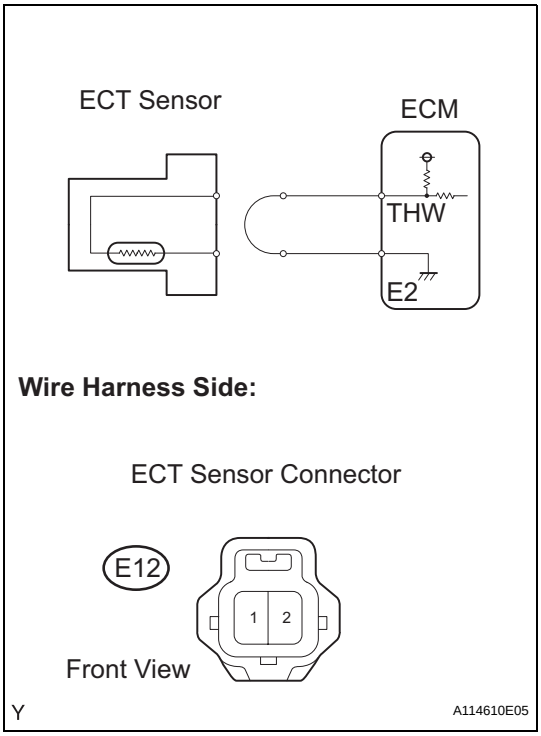

(a) Disconnect the E12 Engine Coolant Temperature (ECT) sensor connector.
(b) Connect terminals 1 and 2 of the ECT sensor connector on the wire harness side.
(c) Connect the intelligent tester to the DLC3.
(d) Turn the ignition switch to the ON position.
(e) Turn the tester on.
(f) Select the following menu items: DIAGNOSIS / ENHANCED OBD II / DATA LIST / PRIMARY / COOLANT TEMP.
(g) Read the value displayed on the tester.
Standard:
140°C (284°F) or higher
(h) Reconnect the ECT sensor connector.

OK → **REPLACE ENGINE COOLANT TEMPERATURE SENSOR (See page ES-516)**

NG

3	CHECK HARNESS AND CONNECTOR (ENGINE COOLANT TEMPERATURE SENSOR - ECM)

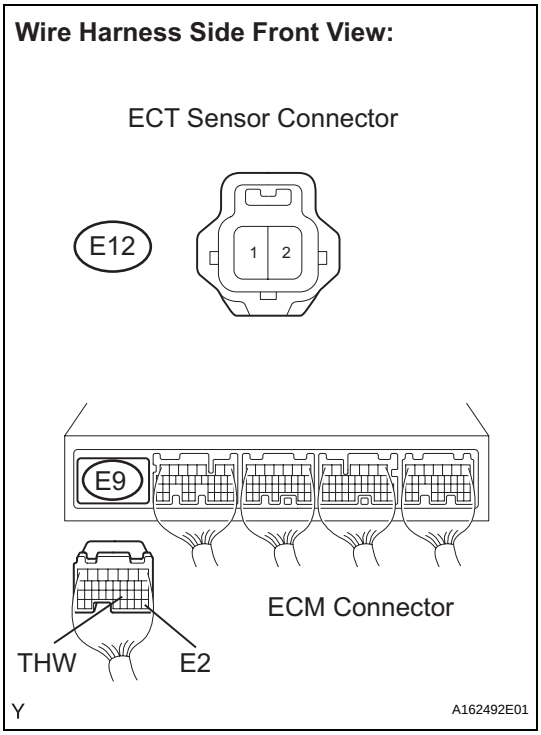

(a) Disconnect the E12 ECT sensor connector.
(b) Disconnect the E9 ECM connector.
(c) Measure the resistance according to the value(s) in the table below.
Standard resistance

Tester Connection	Specified Condition
THW (E9-21) - E12-2	Below 1 Ω
E2 (E9-28) - E12-1	Below 1 Ω

(d) Reconnect the ECM connector.
(e) Reconnect the ECT connector.

OK → **REPAIR OR REPLACE HARNESS OR CONNECTOR (ENGINE COOLANT TEMPERATURE SENSOR - ECM)**

NG

REPLACE ECM (See page ES-498)

4 READ VALUE OF INTELLIGENT TESTER (CHECK FOR SHORT IN WIRE HARNESS)

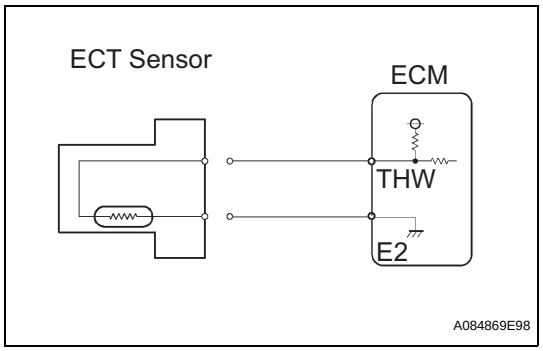

(a) Disconnect the E12 ECT sensor connector.
(b) Connect the intelligent tester to the DLC3.
(c) Turn the ignition switch to the ON position.
(d) Turn the tester on.
(e) Select the following menu items: DIAGNOSIS / ENHANCED OBD II / DATA LIST / PRIMARY / COOLANT TEMP.
(f) Read the value displayed on the tester.
Standard:
-40°C (-40°F)
(g) Reconnect the ECT sensor connector.

OK → **REPLACE ENGINE COOLANT TEMPERATURE SENSOR (See page ES-516)**

NG

5 CHECK HARNESS AND CONNECTOR (ENGINE COOLANT TEMPERATURE SENSOR - ECM)

Wire Harness Side Front View:

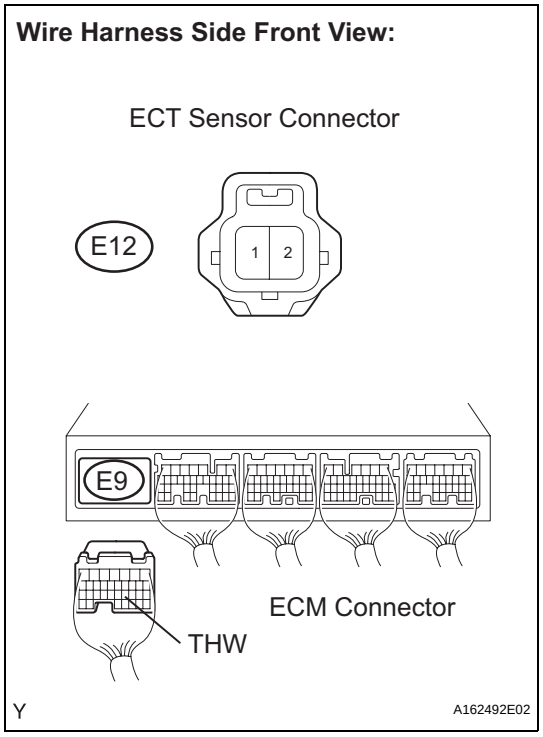

(a) Disconnect the E12 ECT sensor connector.
(b) Disconnect the E9 ECM connector.
(c) Measure the resistance according to the value(s) in the table below.
Standard resistance

Tester Connection	Specified Condition
THW (E9-21) or E12-2 - Body ground	10 kΩ or higher

(d) Reconnect the ECT sensor connector.
(e) Reconnect the ECM connector.

OK → **REPAIR OR REPLACE HARNESS OR CONNECTOR (ENGINE COOLANT TEMPERATURE SENSOR - ECM)**

ES

NG

REPLACE ECM (See page ES-498)