DTC	P0171	System Too Lean (Bank 1)

DTC	P0172	System Too Rich (Bank 1)

DTC	P0174	System Too Lean (Bank 2)

DTC	P0175	System Too Rich (Bank 2)

DESCRIPTION

ES

The fuel trim is related to the feedback compensation value, not to the basic injection time. The fuel trim consists of both the short-term and long-term fuel trims.

The short-term fuel trim is fuel compensation that is used to constantly maintain the air-fuel ratio at stoichiometric levels. The signal from the Air-Fuel Ratio (A/F) sensor indicates whether the air-fuel ratio is rich or lean compared to the stoichiometric ratio. This triggers a reduction in the fuel injection volume if the air-fuel ratio is rich and an increase in the fuel injection volume if it is lean.

Factors such as individual engine differences, wear over time and changes in operating environment cause short-term fuel trim to vary from the central value. The long-term fuel trim, which controls overall fuel compensation, compensates for long-term deviations in the fuel trim from the central value caused by the short-term fuel trim compensation.

If both the short-term and long-term fuel trims are lean or rich beyond predetermined values, it is interpreted as a malfunction, and the ECM illuminates the MIL and sets a DTC.

DTC No.	DTC Detection Condition	Trouble Area
P0171 P0174	With warm engine and stable air-fuel ratio feedback, fuel trim considerably in error to lean side (2 trip detection logic)	• Intake system • Injector blockage • Mass Air Flow (MAF) meter • Engine Coolant Temperature (ECT) sensor • Fuel pressure • Gas leakage from exhaust system • Open or short in A/F sensor (bank 1, 2 sensor 1) circuit • A/F sensor (bank 1, 2 sensor 1) • A/F sensor heater (bank 1, 2 sensor 1) • A/F sensor heater relay • A/F sensor heater and A/F sensor heater relay circuits • PCV valve and hose • PCV hose connections • ECM
P0172 P0175	With warm engine and stable air-fuel ratio feedback, fuel trim considerably in error to rich side (2 trip detection logic)	• Injector leakage or blockage • MAF meter • ECT sensor • Ignition system • Fuel pressure • Gas leakage from exhaust system • Open or short in A/F sensor (bank 1, 2 sensor 1) circuit • A/F sensor (bank 1, 2 sensor 1) • A/F sensor heater (bank 1, 2 sensor 1) • A/F sensor heater relay • A/F sensor heater and A/F sensor heater relay circuits • ECM

HINT:

- When DTC P0171 or P0174 is set, the actual air-fuel ratio is on the lean side. When DTC P0172 or P0175 is set, the actual air-fuel ratio is on the rich side.
- If the vehicle runs out of fuel, the air-fuel ratio is lean and DTC P0171 or P0174 may be set. The MIL is then illuminated.

- When the total of the short-term and long-term fuel trim values is within the malfunction threshold (and the engine coolant temperature is more than 75°C [167°F]), the system is functioning normally.

MONITOR DESCRIPTION

Under closed-loop fuel control, fuel injection volumes that deviate from those estimated by the ECM cause changes in the long-term fuel trim compensation value. The long-term fuel trim is adjusted when there are persistent deviations in the short-term fuel trim values. Deviations from the ECM's estimated fuel injection volumes also affect the average fuel trim learning value, which is a combination of the average short-term fuel trim (fuel feedback compensation value) and the average long-term fuel trim (learning value of the air-fuel ratio). If the average fuel trim learning value exceeds the malfunction thresholds, the ECM interprets this as a fault in the fuel system and sets a DTC.

Example:

The average fuel trim learning value is more than +35% or less than -35%, the ECM interprets this as a fuel system malfunction.

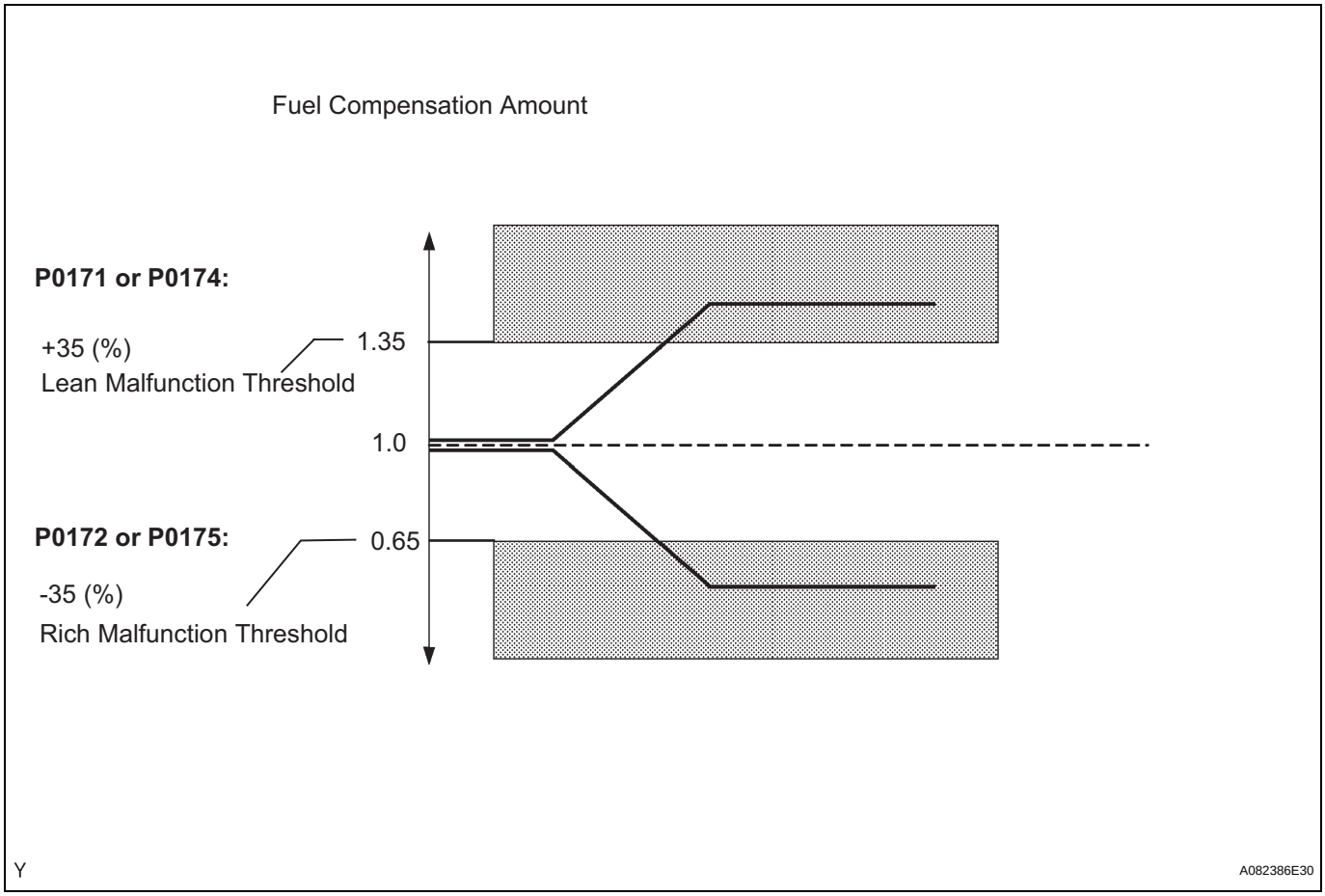

MONITOR STRATEGY

Related DTCs	P0171: Fuel trim Lean (Bank 1) P0172: Fuel trim Rich (Bank 1) P0174: Fuel trim Lean (Bank 2) P0175: Fuel trim Rich (Bank 2)
Required Sensors / Components (Main)	Fuel system
Required Sensors / Components (Related)	A/F sensor, Mass air flow meter, Crankshaft position sensor
Frequency of Operation	Continuous
Duration	Less than 10 seconds
MIL Operation	2 driving cycles
Sequence of Operation	None

TYPICAL ENABLING CONDITIONS

Fuel-trim:

The monitor will run whenever these DTCs are not present	P0010, P0020 (VVT VSV1, 2), P0011, P0012 (VVT System-Advance, Retard), P0021, P0022 (VVT System 2-Adavance, Retard), P0031, P0032, P0051, P0052 (A/F Sensor Heater Sensor 1), P0100, P0101, P0102, P0103 (MAF Sensor), P0115, P0116, P0117, P0118 (ECT Sensor), P0120, P0121, P0122, P0123, P0220, P0222, P0223, P2135 (TP Sensor), P0125 (Insufficient ECT for Closed Loop), P0335 (CKP Sensor), P0340 (CMP Sensor), P0351, P0352, P0353, P0354, P0356 (Ignitor), P0500 (VSS)
Fuel system status	Closed-loop
Battery voltage	11 V or more
Either of the following conditions is met	Condition 1 or 2
1. Engine RPM	Less than 1100 rpm
2. Intake air amount per revolution	0.22 g/rev or more
Catalyst monitor	Not executed

ES

TYPICAL MALFUNCTION THRESHOLDS

Fuel trim:

EVAP purge-cut	Executing
Either of the following conditions is met	Condition 1 or 2
1. Average between short-term fuel trim and long-term fuel trim	35% or more at 80°C (176°F) of ECT
2. Average between short-term fuel trim and long-term fuel trim	-35% or less at 80°C (176°F) of ECT

WIRING DIAGRAM

Refer to DTC P2195 (See page ES-359).

INSPECTION PROCEDURE

HINT:

For use of the intelligent tester only:

Malfunctioning areas can be identified by performing the A/F CONTROL function provided in the ACTIVE TEST. The A/F CONTROL function can help to determine whether the Air-Fuel Ratio (A/F) sensor, Heated Oxygen (HO2) sensor and other potential trouble areas are malfunctioning.

The following instructions describe how to conduct the A/F CONTROL operation using the intelligent tester.

1. Connect the intelligent tester to the DLC3.
2. Start the engine and turn the tester on.
3. Warm up the engine at an engine speed of 2500 rpm for approximately 90 seconds.
4. Select the following menu items on the tester: DIAGNOSIS / ENHANCED OBD II / ACTIVE TEST / A/F CONTROL.
5. Perform the A/F CONTROL operation with the engine in an idling condition (press the RIGHT or LEFT button to change the fuel injection volume).
6. Monitor the voltage outputs of the A/F and HO2 sensors (AFS B1S1 and O2S B1S2 or AFS B2S1 and O2S B2S2) displayed on the tester.

   HINT:

   - The A/F CONTROL operation lowers the fuel injection volume by 12.5% or increases the injection volume by 25%.
   - Each sensor reacts in accordance with increases and decreases in the fuel injection volume.

Standard voltage

Tester Display (Sensor)	Injection Volumes	Status	Voltages
AFS B1S1 or AFS B2S1 (A/F)	+25%	Rich	Less than 3.0

Tester Display (Sensor)	Injection Volumes	Status	Voltages
AFS B1S1 or AFS B2S1 (A/F)	-12.5%	Lean	More than 3.35
O2S B1S2 or O2S B2S2 (HO2)	+25%	Rich	More than 0.55
O2S B1S2 or O2S B2S2 (HO2)	-12.5%	Lean	Less than 0.4

NOTICE:
The Air-Fuel Ratio (A/F) sensor has an output delay of a few seconds and the Heated Oxygen (HO2) sensor has a maximum output delay of approximately 20 seconds.

Case	A/F Sensor (Sensor 1) Output Voltage	HO2 Sensor (Sensor 2) Output Voltage	Main Suspected Trouble Area
1	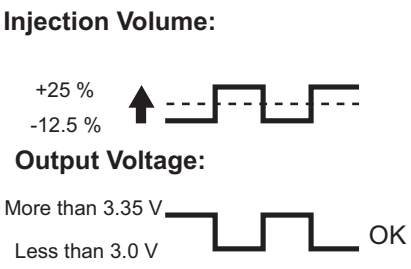	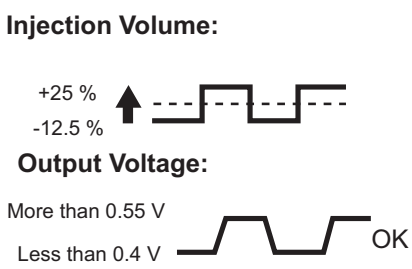	-
2	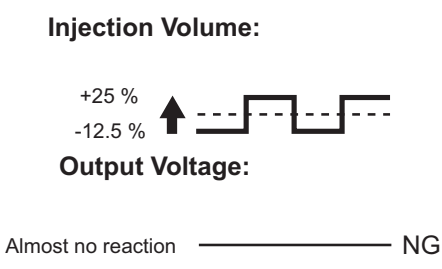	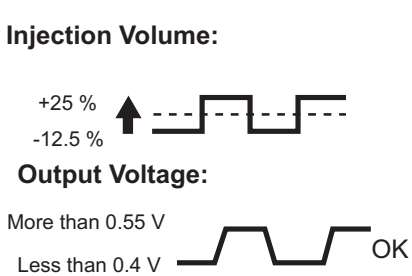	• A/F sensor • A/F sensor heater • A/F sensor circuit
3	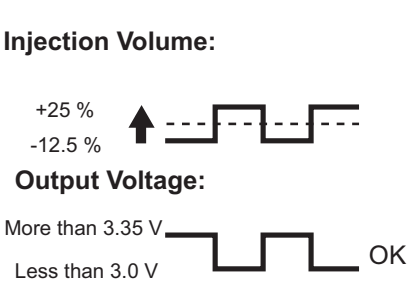	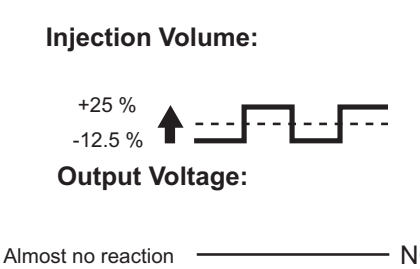	• HO2 sensor • HO2 sensor heater • HO2 sensor circuit
4	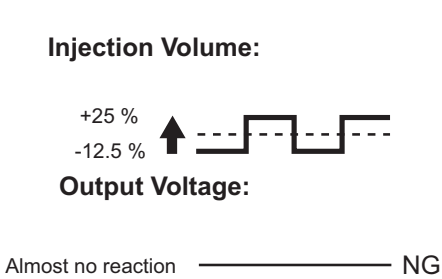	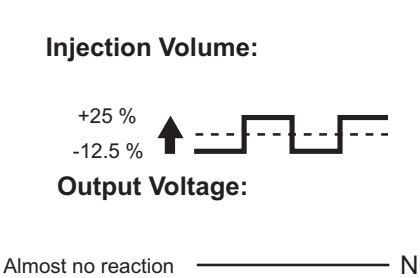	• Fuel pressure • Gas leakage from exhaust system (Air-fuel ratio extremely lean or rich)

ES

– Following the A/F CONTROL procedure enables technicians to check and graph the voltage outputs of both the A/F and HO2 sensors.
– To display the graph, select the following menu items on the tester: DIAGNOSIS / ENHANCED OBD II / ACTIVE TEST / A/F CONTROL / USER DATA / AFS B1S1 and O2S B1S2 or AFS B2S1 and O2S B2S2. Press the YES button and then the ENTER button. Then press the F4 button.
HINT:
  • Read freeze frame data using the intelligent tester. The ECM records vehicle and driving condition information as freeze frame data the moment a DTC is stored. When troubleshooting, freeze frame data can be helpful in determining whether the vehicle was running or stopped, whether the engine was warmed up or not, whether the air-fuel ratio was lean or rich, as well as other data recorded at the time of a malfunction.
  • A low A/F sensor voltage could be caused by a rich air-fuel mixture. Check for conditions that would cause the engine to run rich.
  • A high A/F sensor voltage could be caused by a lean air-fuel mixture. Check for conditions that would cause the engine to run lean.

ES

1	CHECK ANY OTHER DTCS OUTPUT (IN ADDITION TO DTC P0171, P0172, P0174 OR P0175)

(a) Connect the intelligent tester to the DLC3.
(b) Turn the ignition switch to the ON position and turn the tester on.
(c) Select the following menu items: DIAGNOSIS / ENHANCED OBD II / DTC INFO / CURRENT CODES.
(d) Read the DTCs.

Result

Display (DTC Output)	Proceed to
P0171, P0172, P0174 or P0175	A
P0171, P0172, P0174 or P0175 and other DTCs	B

HINT:
If any DTCs other than P0171, P0172, P0174 or P0175 are output, troubleshoot those DTCs first.

B → **GO TO DTC CHART (See page ES-56)**

A

2	CHECK PCV HOSE CONNECTIONS

OK:
PCV hose is connected correctly and is not damaged.

NG → **REPAIR OR REPLACE PCV HOSE**

OK

3	CHECK INTAKE SYSTEM

(a) Check the intake system for vacuum leakage.
OK:
No leakage from intake system.

NG → **REPAIR OR REPLACE INTAKE SYSTEM**

OK

4	PERFORM ACTIVE TEST BY INTELLIGENT TESTER (A/F CONTROL)

(a) Connect the intelligent tester to the DLC3.
(b) Start the engine and turn the tester on.
(c) Warm up the engine at an engine speed of 2500 rpm for approximately 90 seconds.
(d) Select the following menu items on the tester: DIAGNOSIS / ENHANCED OBD II / ACTIVE TEST / A/F CONTROL.
(e) Perform the A/F CONTROL operation with the engine in an idling condition (press the RIGHT or LEFT button to change the fuel injection volume).
(f) Monitor the voltage outputs of the A/F and HO2 sensors (AFS B1S1 and O2S B1S2 or AFS B2S1 and O2S B2S2) displayed on the tester.
HINT:
- The A/F CONTROL operation lowers the fuel injection volume by 12.5% or increases the injection volume by 25%.
- Each sensor reacts in accordance with increases and decreases in the fuel injection volume.

ES

Standard voltage

Tester Display (Sensor)	Injection Volumes	Status	Voltages
AFS B1S1 or AFS B2S1 (A/F)	+25%	Rich	Less than 3.0
AFS B1S1 or AFS B2S1 (A/F)	-12.5%	Lean	More than 3.35
O2S B1S2 or O2S B2S2 (HO2)	+25%	Rich	More than 0.55
O2S B1S2 or O2S B2S2 (HO2)	-12.5%	Lean	Less than 0.4

Result

Status AFS B1S1 or AFS B2S1	Status O2S B1S2 or O2S B2S2	A/F Condition and A/F Sensor Condition	Misfires	Suspected Trouble Areas	Proceed to
Lean/Rich	Lean/Rich	Normal	-	-	C
Lean	Lean	Actual air-fuel ratio lean	May occur	• PCV valve and hose • PCV hose connections • Injector blockage • Gas leakage from exhaust system • Air induction system • Fuel pressure • Mass Air Flow (MAF) meter • Engine Coolant Temperature (ECT) sensor	A
Rich	Rich	Actual air-fuel ratio rich	-	• Injector leakage or blockage • Gas leakage from exhaust system • Ignition system • Fuel pressure • MAF meter • ECT sensor	A
Lean	Lean/Rich	A/F sensor malfunction	-	A/F sensor	B
Rich	Lean/Rich	A/F sensor malfunction	-	A/F sensor	B

Lean: During A/F CONTROL, the A/F sensor output voltage (AFS) is consistently more than 3.35 V, and the HO2 sensor output voltage (O2S) is consistently less than 0.4 V.
Rich: During A/F CONTROL, the AFS is consistently less than 3.0 V, and the O2S is consistently more than 0.55 V.
Lean/Rich: During A/F CONTROL of the ACTIVE TEST, the output voltage of the heated oxygen sensor alternates correctly.

B	**Go to step 11**
C	**Go to step 15**

ES

A

5 READ VALUE OF INTELLIGENT TESTER (COOLANT TEMP)

(a) Connect the intelligent tester to the DLC3.
(b) Turn the ignition switch to the ON position and turn the tester on.
(c) Select the following menu items: DIAGNOSIS / ENHANCED OBD II / DATA LIST / PRIMARY / COOLANT TEMP.
(d) Read the COOLANT TEMP twice, when the engine is both cold and warmed up.
Standard:
With cold engine:
Same as ambient air temperature.
With warm engine:
Between 75°C and 95°C (167°F and 203°F)

NG	**REPLACE ENGINE COOLANT TEMPERATURE SENSOR (See page ES-516)**

OK

6 READ VALUE OF INTELLIGENT TESTER (MAF)

(a) Connect the intelligent tester to the DLC3.
(b) Turn the ignition switch to the ON position and turn the tester on.
(c) Select the following menu items: DIAGNOSIS / ENHANCED OBD II / DATA LIST / PRIMARY / MAF and COOLANT TEMP.
(d) Allow the engine to idle until the COOLANT TEMP reaches 75°C (167°F) or more.
(e) Read the MAF with the engine in an idling condition and at an engine speed of 2500 rpm.
Standard:
MAF while engine idling:
Between 1.8 g/s and 4.7 g/s (shift position: N, A/C: OFF).
MAF at engine speed of 2500 rpm:

Between 7.4 g/s and 18.9 g/s (shift position: N, A/C: OFF).

NG → **REPLACE MASS AIR FLOW METER (See page ES-504)**

OK

7	CHECK FUEL PRESSURE

(a) Check the fuel pressure (See page FU-7).

NG → **REPAIR OR REPLACE FUEL SYSTEM**

OK

8	INSPECT FOR EXHAUST GAS LEAK

OK:
No gas leakage.

NG → **REPAIR OR REPLACE EXHAUST SYSTEM**

OK

9	CHECK FOR SPARKS AND IGNITION

(a) Check for sparks and ignition (See page ES-217).
HINT:
If the spark plugs or ignition system malfunctions, engine misfire may occur. The misfire count can be read using the intelligent tester. Select the following menu items: DIAGNOSIS / ENHANCED OBD II / DATA LIST / PRIMARY / CYL #1 (to CYL #6).

NG → **REPAIR OR REPLACE IGNITION SYSTEM**

OK

10	INSPECT FUEL INJECTOR ASSEMBLY (INJECTION AND VOLUME)

(a) Inspect the fuel injector assembly (See page FU-16).
HINT:
If the injectors malfunction, engine misfire may occur. The misfire count can be read using the intelligent tester. Select the following menu items: DIAGNOSIS / ENHANCED OBD II / DATA LIST / PRIMARY / CYL #1 (to CYL #6).

NG → **REPLACE FUEL INJECTOR ASSEMBLY (See page FU-13)**

OK

ES

11 INSPECT AIR FUEL RATIO SENSOR (HEATER RESISTANCE)

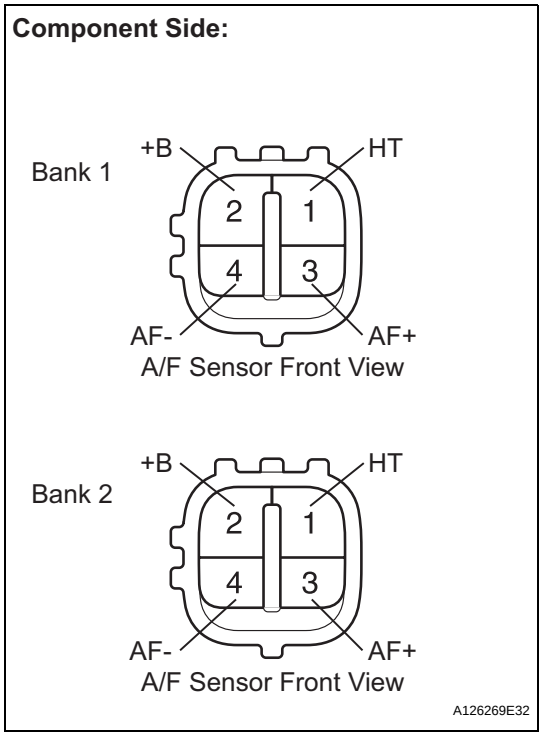

(a) Disconnect the A5 or A6 A/F sensor connectors.
(b) Measure the resistance according to the value(s) in the table below.
Standard resistance:
Bank 1

Tester Connection	Specified Condition
HT (1) - +B (2)	1.8 to 3.4 Ω at 20°C (68°F)
HT (1) - AF- (4)	10 kΩ or higher

Bank 2

Tester Connection	Specified Condition
HT (1) - +B (2)	1.8 to 3.4 Ω at 20°C (68°F)
HT (1) - AF- (4)	10 kΩ or higher

(c) Reconnect the A/F sensor connectors.
Result

Result	Proceed to
OK	A
NG (for 2WD model)	B
NG (for 4WD model)	C

B → **REPLACE AIR FUEL RATIO SENSOR (See page EC-19)**

C → **REPLACE AIR FUEL RATIO SENSOR (See page EC-26)**

A

12 INSPECT RELAY (A/F RELAY)

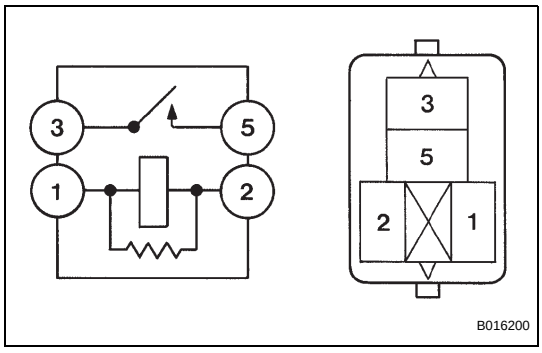

(a) Remove the A/F relay from the No. 6 engine room R/B.
(b) Measure the resistance according to the value(s) in the table below.
Standard resistance

Tester Connection	Specified Condition
3 - 5	10 kΩ or higher
3 - 5	Below 1 Ω (when battery voltage applied to terminals 1 and 2)

(c) Reinstall the A/F relay.

NG → **REPLACE A/F RELAY**

OK

13 CHECK HARNESS AND CONNECTOR (A/F SENSOR - ECM)

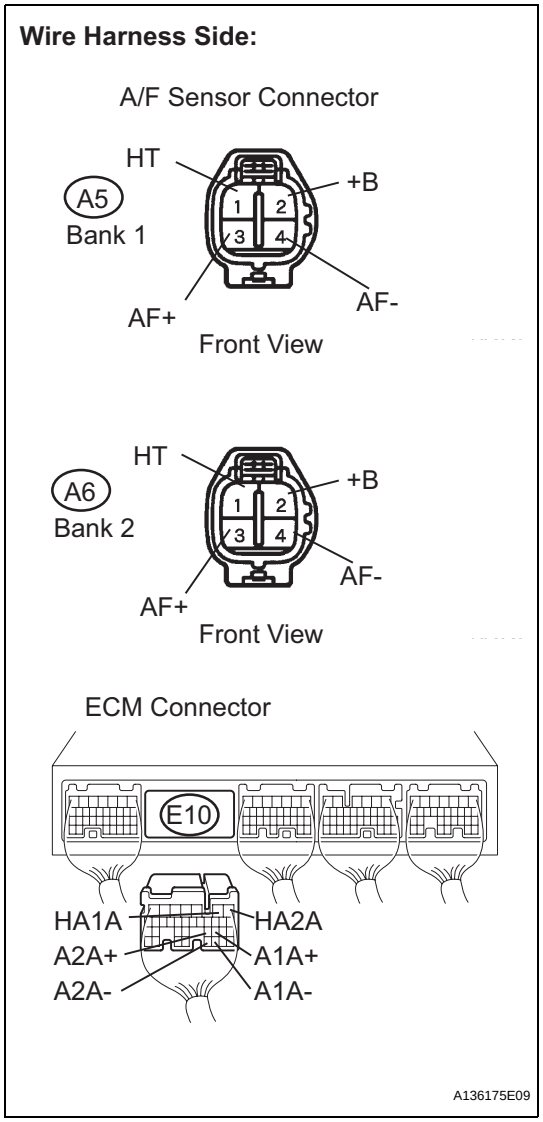

(a) Disconnect the A5 or A6 A/F sensor connectors.
(b) Turn the ignition switch to the ON position.
(c) Measure the voltage according to the value(s) in the table below.

Standard voltage

Tester Connection	Specified Condition
+B (A5-2) - Body ground	9 to 14 V
+B (A6-2) - Body ground	9 to 14 V

(d) Turn the ignition switch off.
(e) Disconnect the E10 ECM connector.
(f) Measure the resistance according to the value(s) in the table below.

Standard resistance:

Check for open

Tester Connection	Specified Condition
HT (A5-1) - HA1A (E10-2)	Below 1 Ω
AF+ (A5-3) - A1A+ (E10-22)	Below 1 Ω
AF- (A5-4) - A1A- (E10-30)	Below 1 Ω
HT (A6-1) - HA2A (E10-1)	Below 1 Ω
AF+ (A6-3) - A2A+ (E10-23)	Below 1 Ω
AF- (A6-4) - A2A- (E10-31)	Below 1 Ω

Check for short

Tester Connection	Specified Condition
HT (A5-1) or HA1A (E10-2) - Body ground	10 kΩ or higher
AF+ (A5-3) or A1A+ (E10-22) - Body ground	10 kΩ or higher
AF- (A5-4) or A1A- (E10-30) - Body ground	10 kΩ or higher
HT (A6-1) or HA2A (E10-1) - Body ground	10 kΩ or higher
AF+ (A6-3) or A2A+ (E10-23) - Body ground	10 kΩ or higher
AF- (A6-4) or A2A- (E10-31) - Body ground	10 kΩ or higher

(g) Reconnect the ECM connector.
(h) Reconnect the A/F sensor connectors.

ES

Reference (System Diagram of Bank 1 Sensor 1):

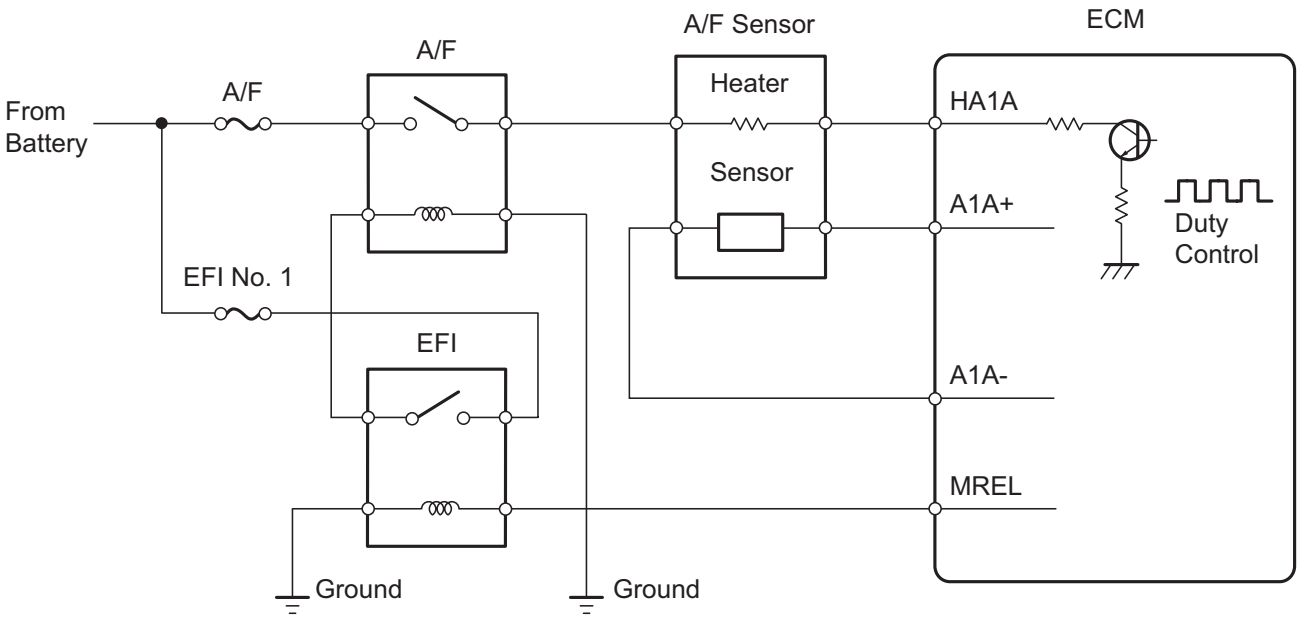

NG → **REPAIR OR REPLACE HARNESS OR CONNECTOR (A/F SENSOR - ECM)**

OK

14	REPLACE AIR FUEL RATIO SENSOR

(a) Replace the air fuel ratio sensor (for 2WD model (See page EC-19) or 4WD model (See page EC-26)).

NEXT

15	PERFORM CONFIRMATION DRIVING PATTERN

(a) Connect the intelligent tester to the DLC3 (Procedure A).
(b) Turn the ignition switch to the ON position and turn the tester on (Procedure B).
(c) Clear the DTCs (See page ES-39) (Procedure C).
(d) Select the check mode using the tester (See page ES-43) (Procedure D).
(e) Start the engine and warm it up with all the accessories switched off (Procedure E).
(f) Drive the vehicle at between 38 mph and 75 mph (60 km/h and 120 km/h) and at an engine speed of between 1400 rpm and 3200 rpm for 3 to 5 minutes (Procedure F).

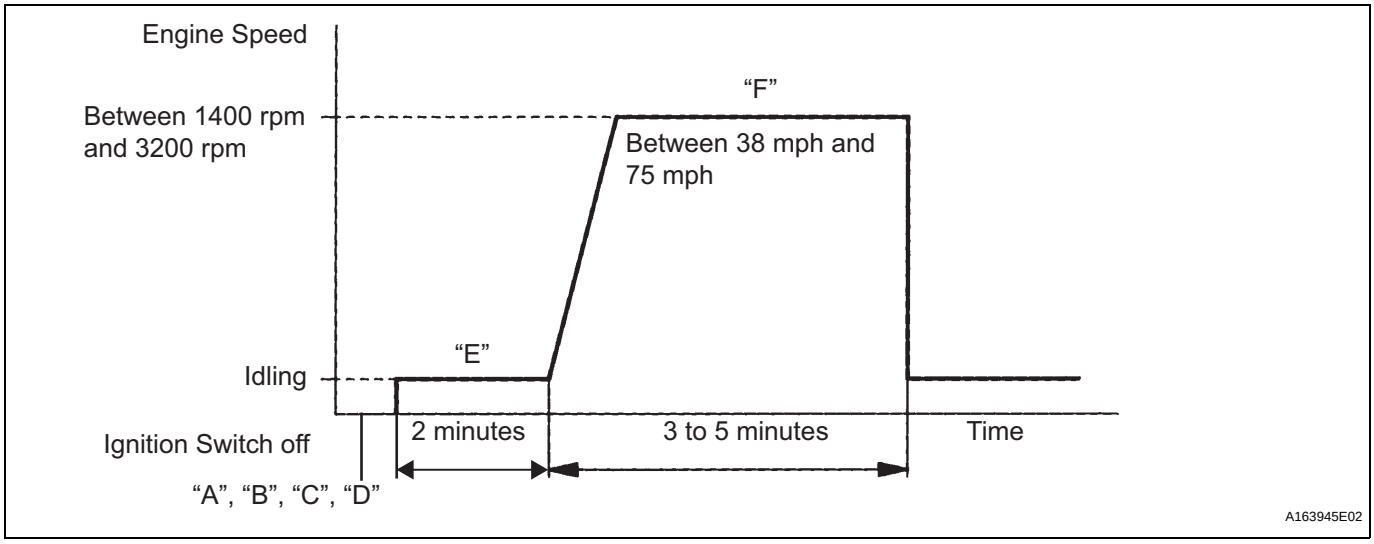

HINT:
If the system is still malfunctioning, the MIL will be illuminated during procedure "F".
NOTICE:
If the conditions in this test are not strictly followed, no malfunction will be detected.

NEXT

16	CHECK WHETHER DTC OUTPUT RECURS (DTC P0171, P0172, P0174 OR P0175)

(a) Select the following menu items: DIAGNOSIS / ENHANCED OBD II / DTC INFO / PENDING CODES.
(b) Read the DTCs.

Result

Display (DTC Output)	Proceed to
No output	A
P0171, P0172, P0174 or P0175	B

B → **Go to step 5**

A

END