DTC	P0230	Fuel Pump Primary Circuit

DESCRIPTION

- This DTC is designed to detect a malfunction in the fuel pump (FUEL PUMP) relay circuit. When the system is normal, the battery voltage is applied to FPR terminal of the ECM while the FUEL PUMP relay is turned OFF. If the battery voltage is not applied to the FPR terminal while the FUEL PUMP relay is OFF, the ECM interprets this as a malfunction. The ECM then illuminates the MIL and sets a DTC.
- The FUEL PUMP relay switches the fuel pump speed according to the engine conditions. The fuel pump operates when the ECM receives the starter-operating signal (STA) and crankshaft-rotating signal (NE). The FUEL PUMP relay is turned ON while the engine is idling or operating at low load. This causes current to flow through the fuel pump resistor to the fuel pump. The fuel pump then operates at low speed. The FUEL PUMP relay is turned OFF while the engine is cranking or operating at high load. The fuel pump then operates at normal speed.

DTC No.	DTC Detection Condition	Trouble Area
P0230	Open or short in FUEL PUMP relay circuit (1 trip detection logic)	• Open or short in FUEL PUMP relay circuit • FUEL PUMP relay • ECM

WIRING DIAGRAM

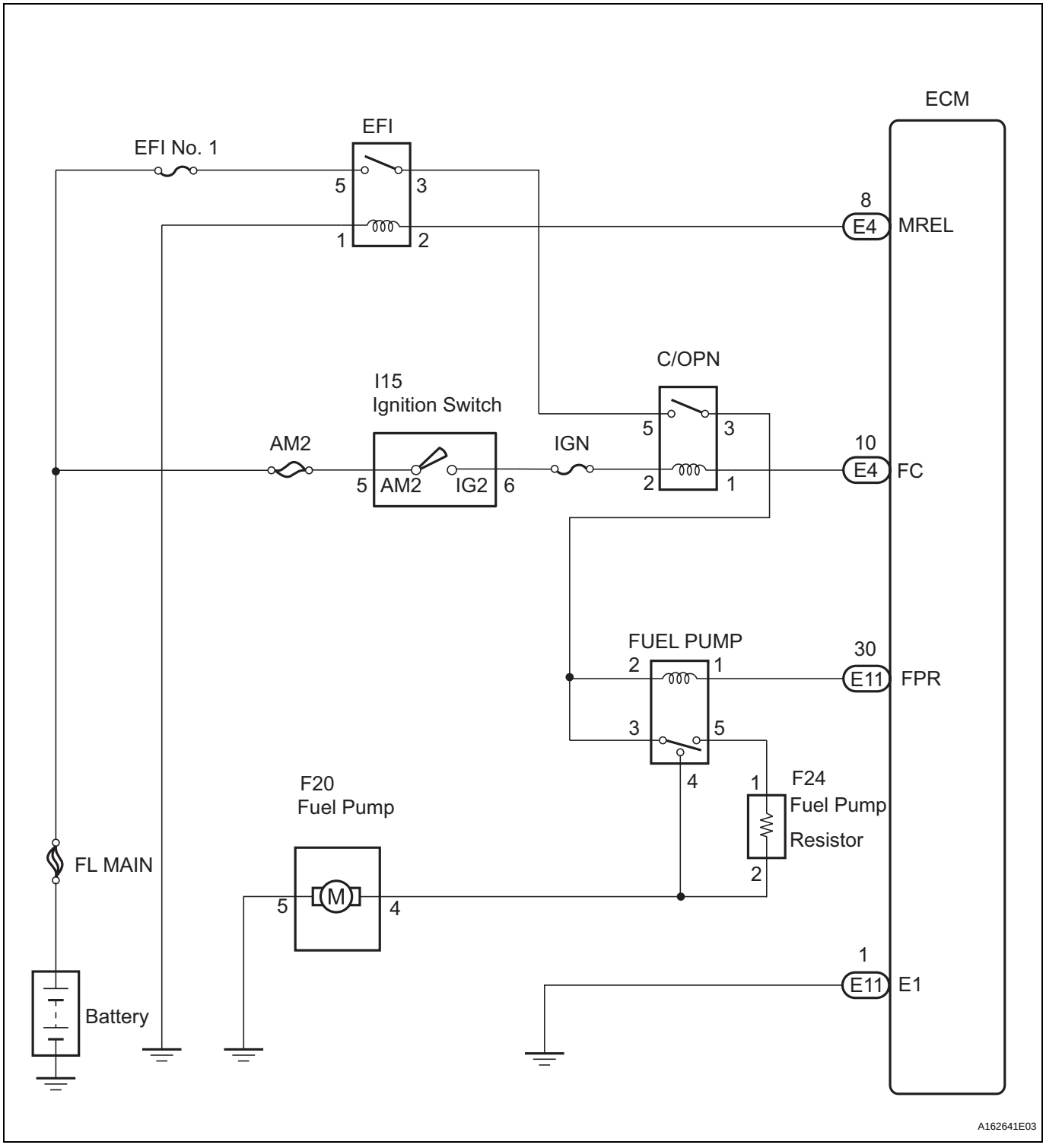

This troubleshooting procedure is based on the premise that the engine is started. If the engine is not started, proceed to the problem symptoms table (See page ES-27).

INSPECTION PROCEDURE

1	**PERFORM ACTIVE TEST BY INTELLIGENT TESTER**

(a) Connect the intelligent tester to the DLC3.

(b) Turn the ignition switch to the ON position and turn the intelligent tester ON.
(c) Enter the following menus: DIAGNOSIS / ENHANCED OBD II / ACTIVE TEST / FUEL PUMP SP CTL.
(d) Check the operation of the relay while operating it using the intelligent tester.
OK:
Operating noise can be heard from the relay.

OK → **CHECK FOR INTERMITTENT PROBLEMS**

NG

ES

2 INSPECT RELAY (FUEL PUMP RELAY)

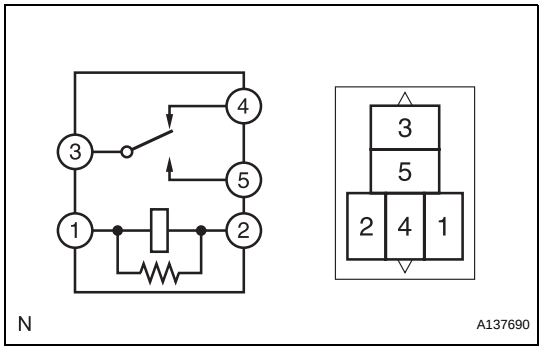

(a) Remove the FUEL PUMP relay from the engine room junction block.
(b) Measure the resistance according to the value(s) in the table below.
Standard resistance

Tester Connection	Specified Condition
3 - 4	Below 1 Ω
3 - 5	10 kΩ or higher
3 - 4	10 kΩ or more (when battery voltage is applied to terminals 1 and 2)
3 - 5	Below 1 Ω (when battery voltage is applied to terminals 1 and 2)

(c) Reinstall the FUEL PUMP relay.

NG → **REPLACE RELAY (FUEL PUMP RELAY)**

OK

3	CHECK HARNESS AND CONNECTOR (FUEL PUMP RELAY - ECM)

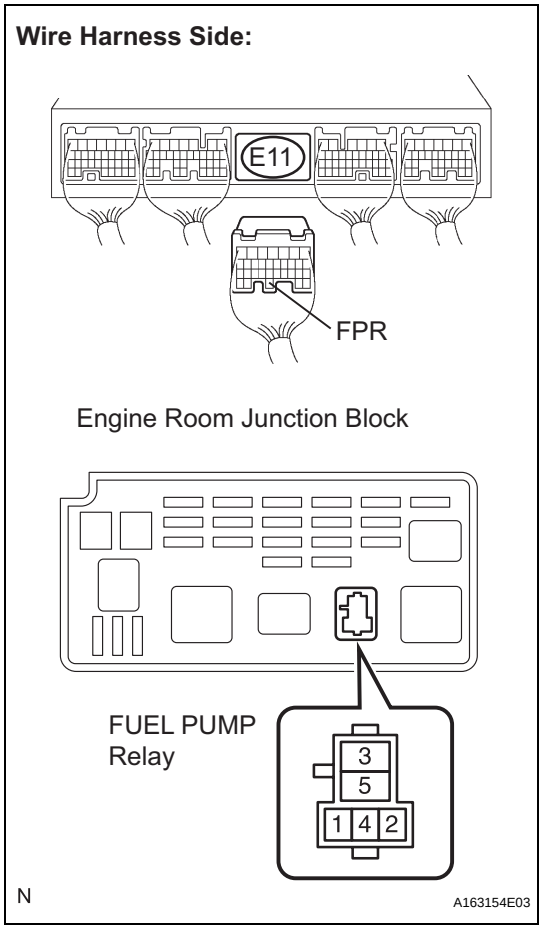

(a) Remove the FUEL PUMP relay from the engine room junction block.
(b) Disconnect the E11 ECM connector.
(c) Measure the resistance according to the value(s) in the table below.

Standard resistance

Tester Connection	Specified Condition
FUEL PUMP relay terminal 1 - FPR (E11-30)	Below 1 Ω
FUEL PUMP relay terminal 1 or FPR (E11-30) - Body Ground	10 kΩ or higher

(d) Reconnect the ECM connector.
(e) Reinstall the FUEL PUMP relay.

NG → **REPAIR OR REPLACE HARNESS OR CONNECTOR (FUEL PUMP RELAY - ECM)**

OK

REPLACE ECM (See page ES-498)

ES